VR3309

VR3309-SUBTL
SUBTL VR 52UX600X1200

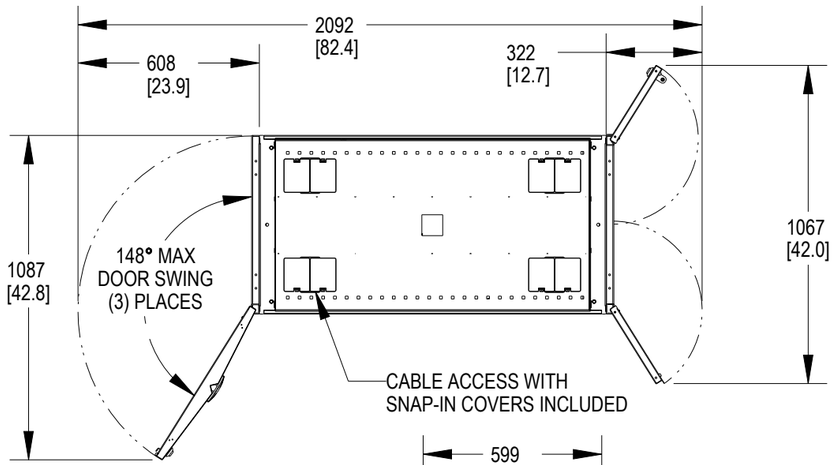

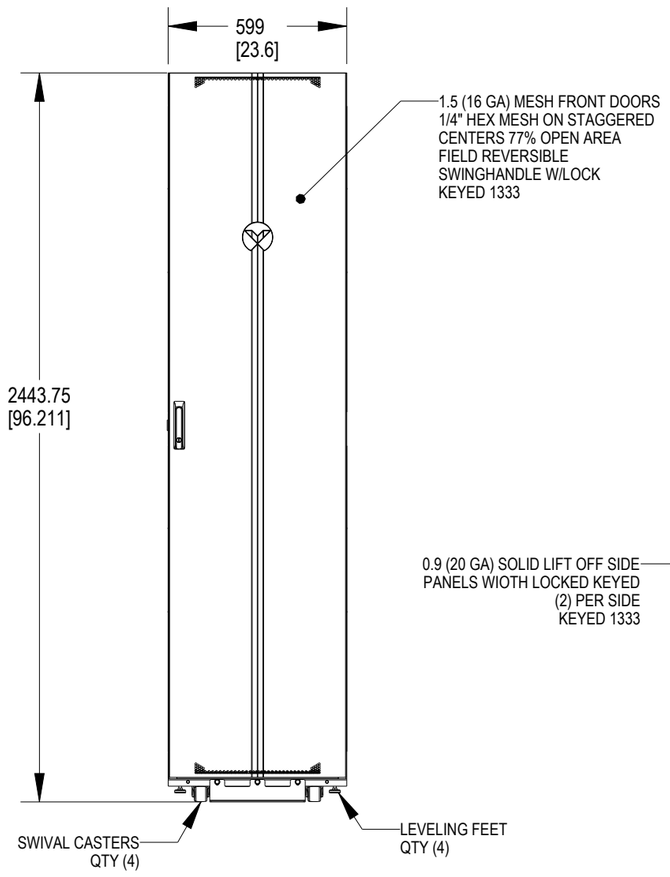

FRONT VIEW

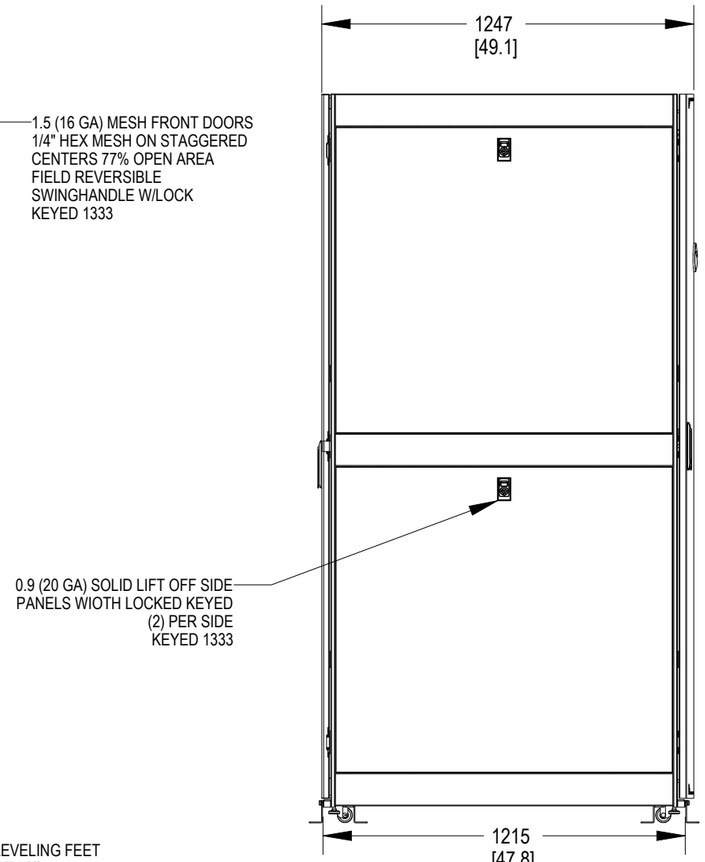

LEFT SIDE VIEW

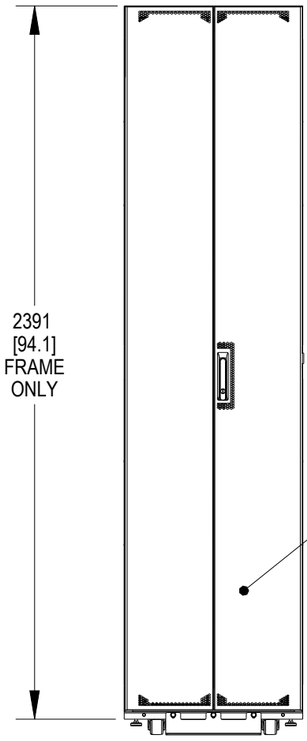

REAR VIEW

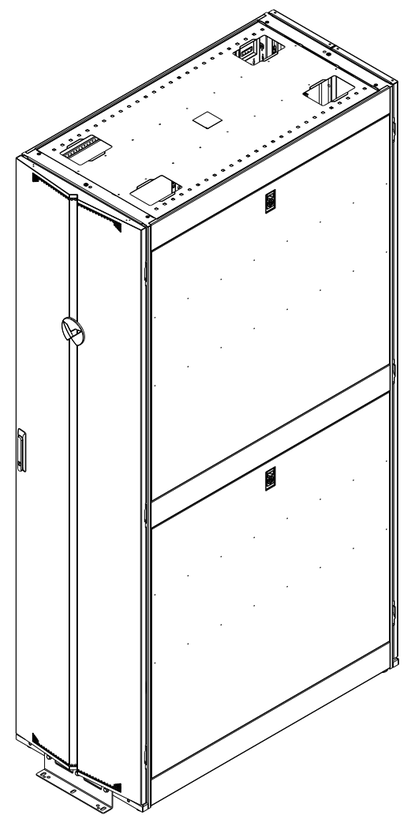

FRONT ISOMETRIC VIEW

NOTES:
1. ALL DIMENSIONS ARE MM (INCH), TOLERANCES ±2.5 (±0.1)
2. STATIC WEIGHT CAPACITY: 1361 KG (3000 LBS)
3. DYNAMIC WEIGHT CAPACITY: 1021 KG (2250 LBS)
4. PACKAGE OF M6 SCREWS, CAGE NUTS INCLUDED.

VR3309

VR3309-SUBTL
SUBTL VR 52UX600X1200

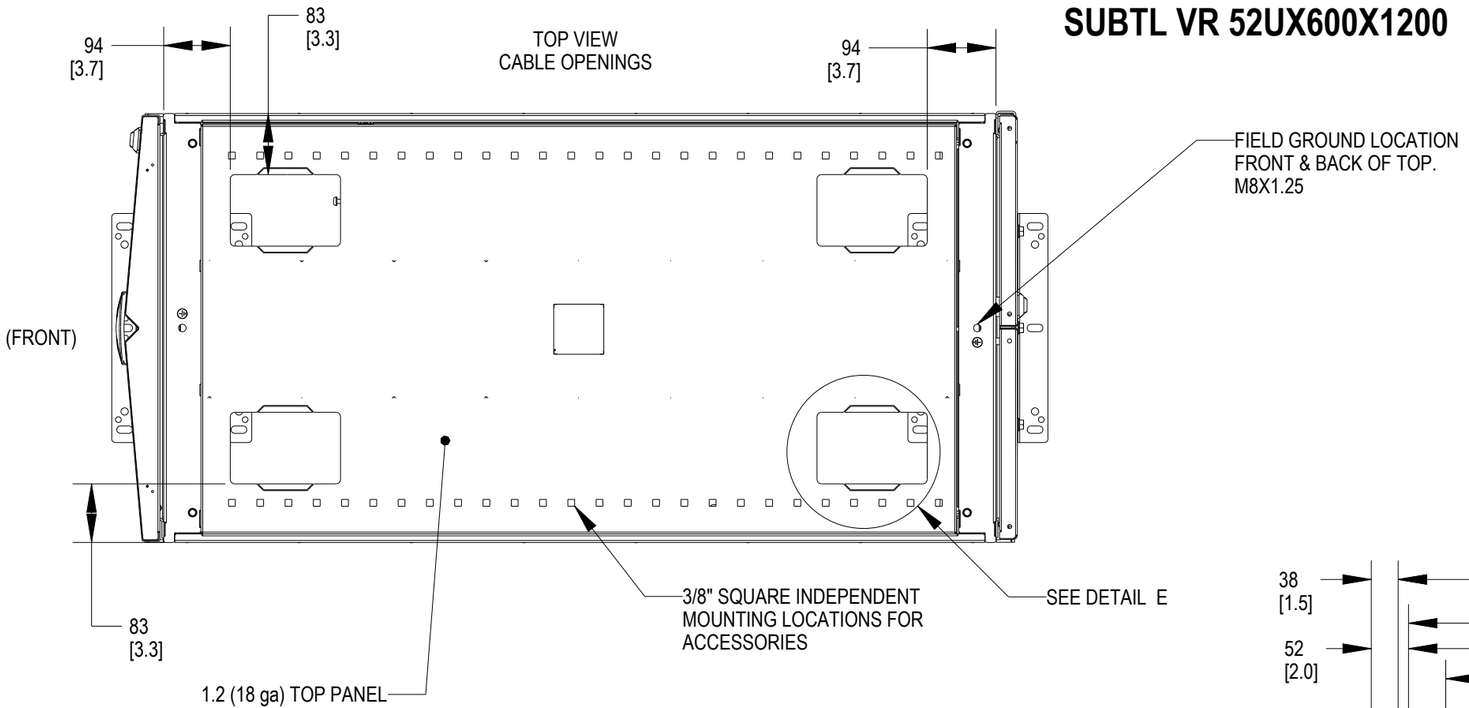

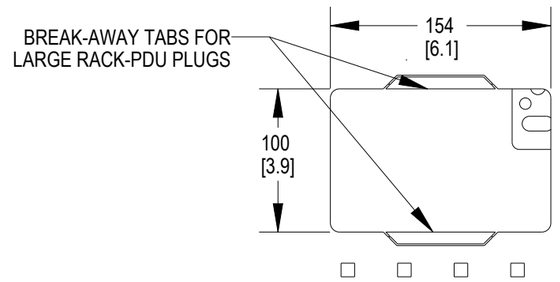

DETAIL E
SCALE 6:25
TYPICAL (4) PLACES
EDGE GUARD SUPPLIED WITH RACK

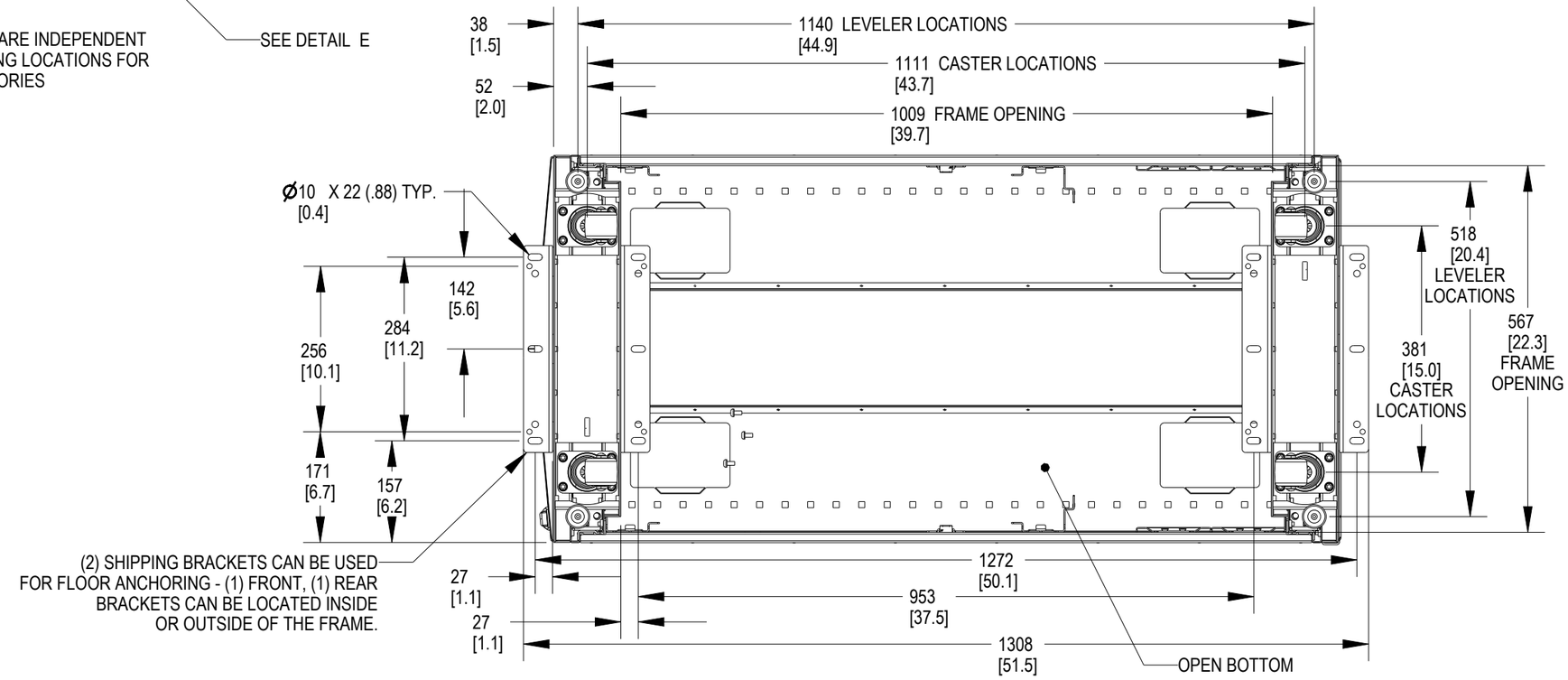

VR3309

VR3309-SUBTL
SUBTL VR 52UX600X1200

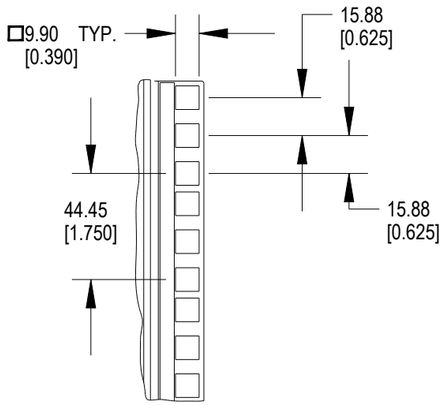

DETAIL B
SCALE 2:5
EIA RAIL DETAIL

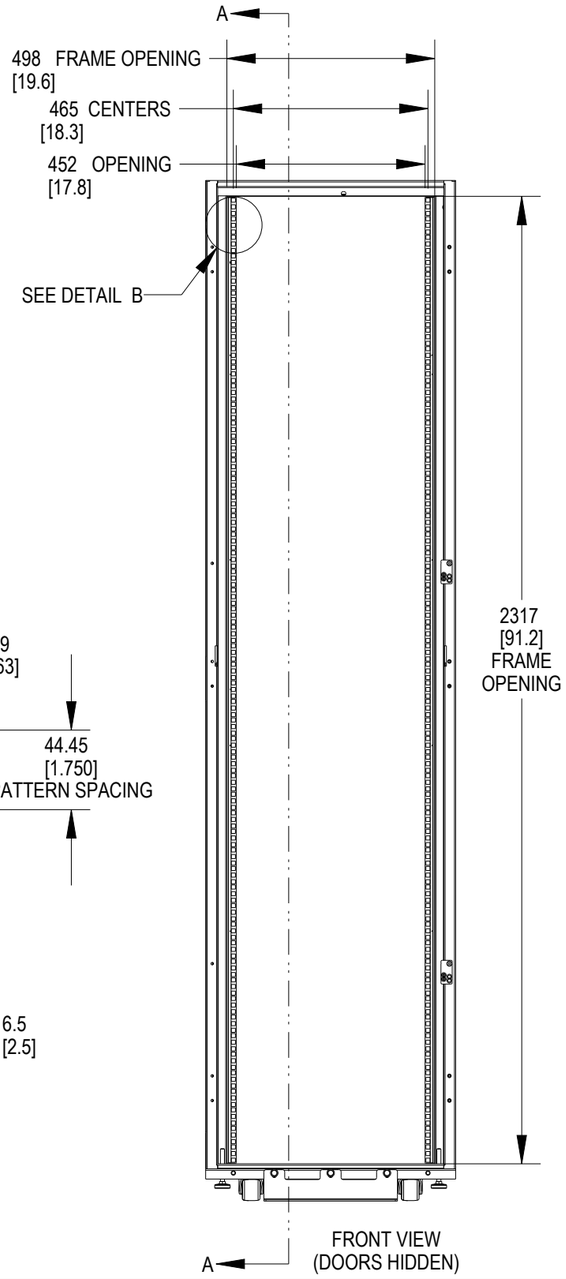

FRONT VIEW
(DOORS HIDDEN)

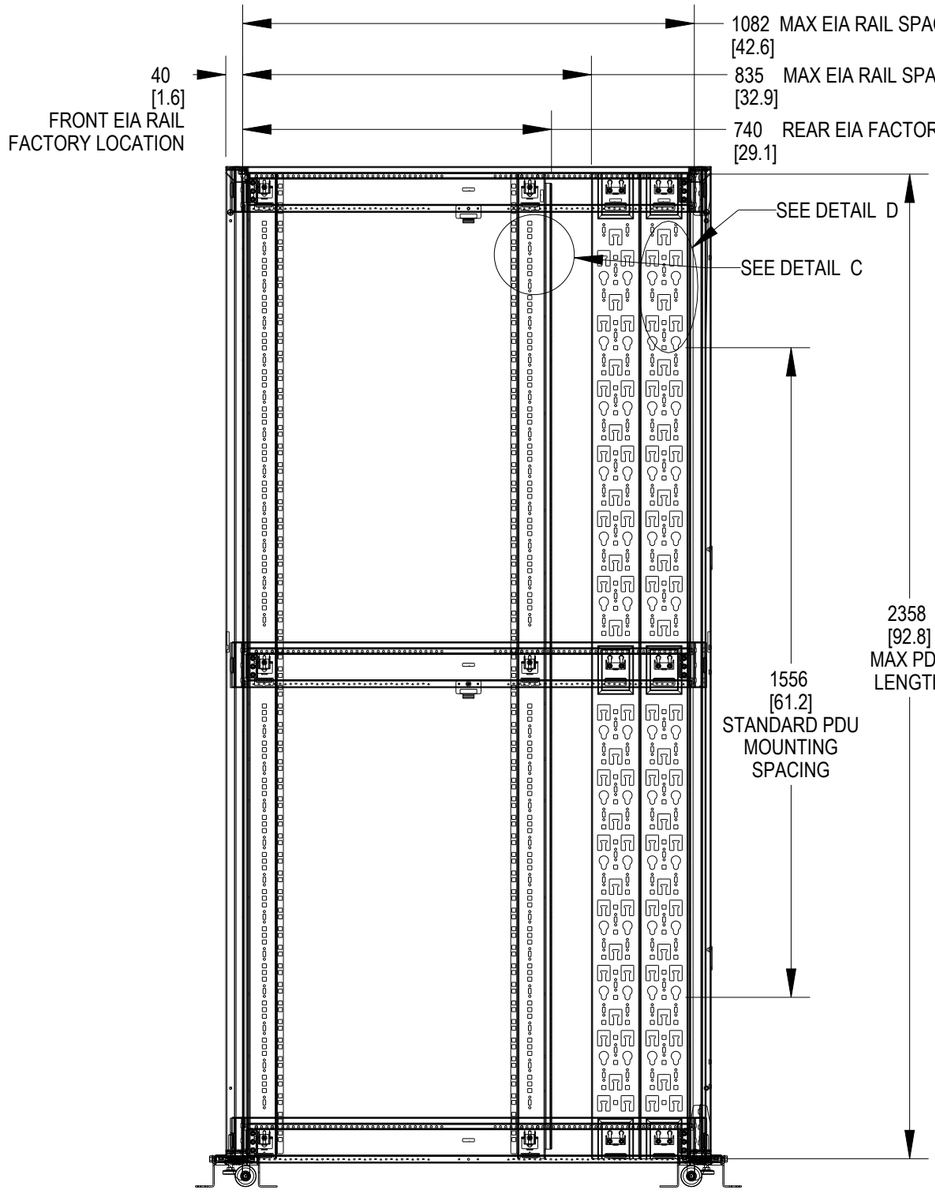

SECTION A-A

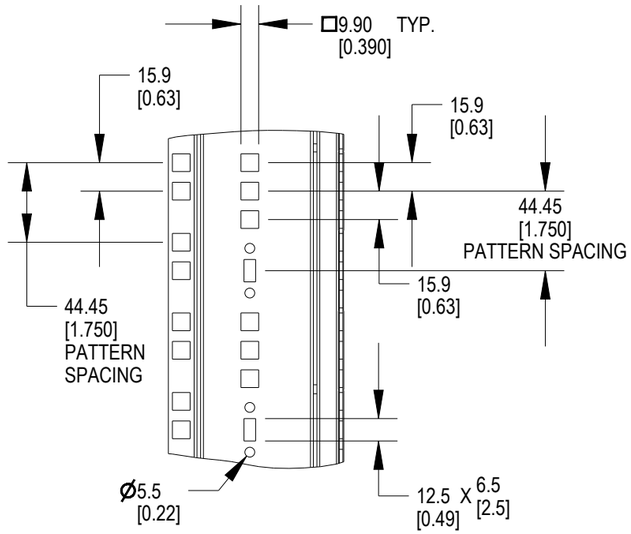

DETAIL C
SCALE 3:10
OPTIONAL ACCESSORY
LOCATIONS

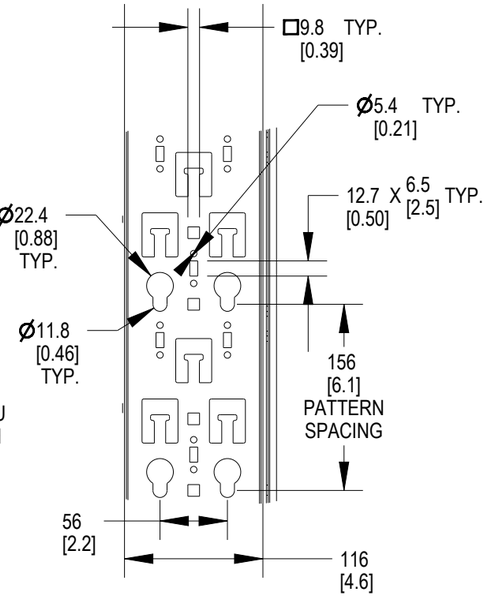

DETAIL D
SCALE 1:5
PDU BRACKET
DETAIL