VR3359

VR3359-SUBTL
SUBTL VR 52UX800X1200

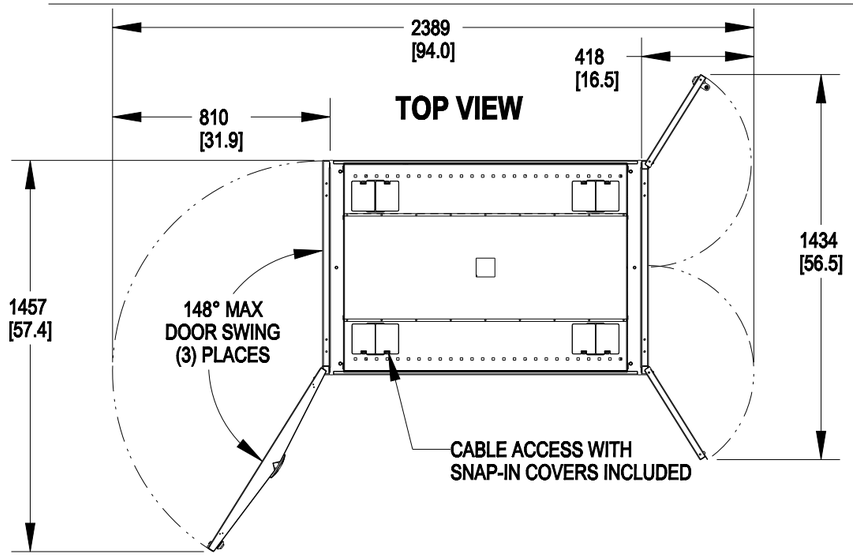

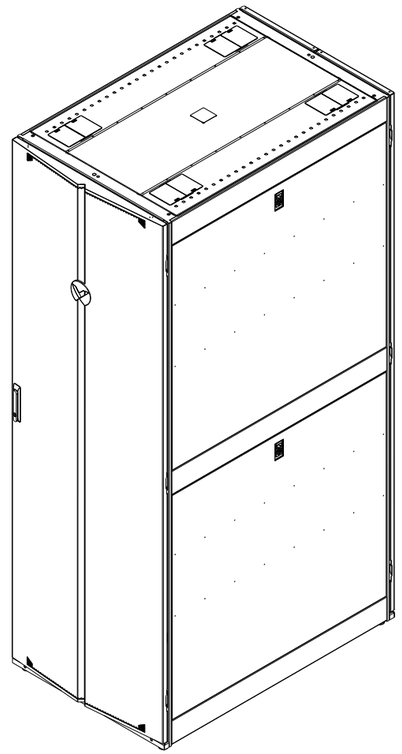

FRONT ISOMETRIC VIEW

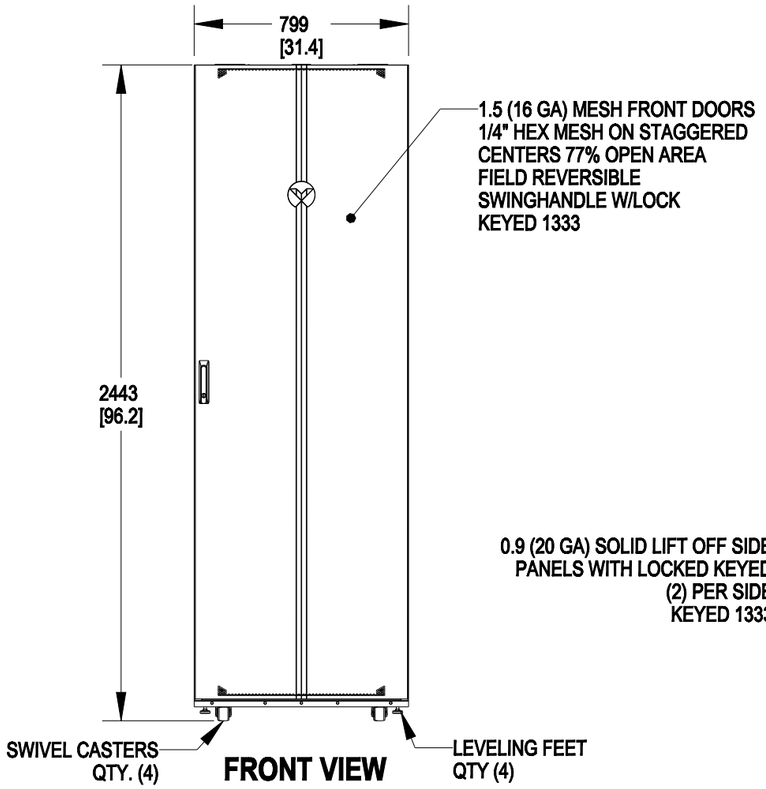

FRONT VIEW

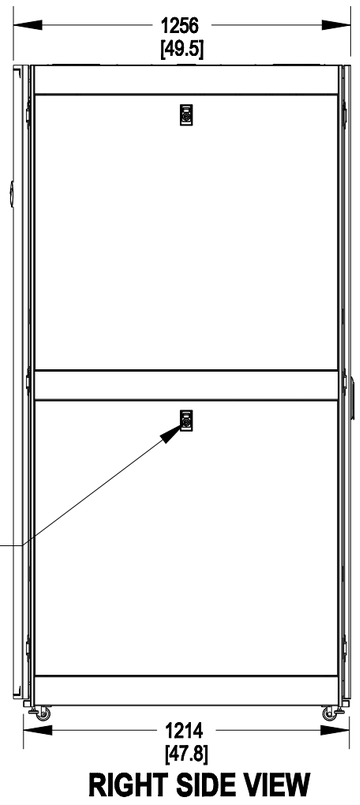

RIGHT SIDE VIEW

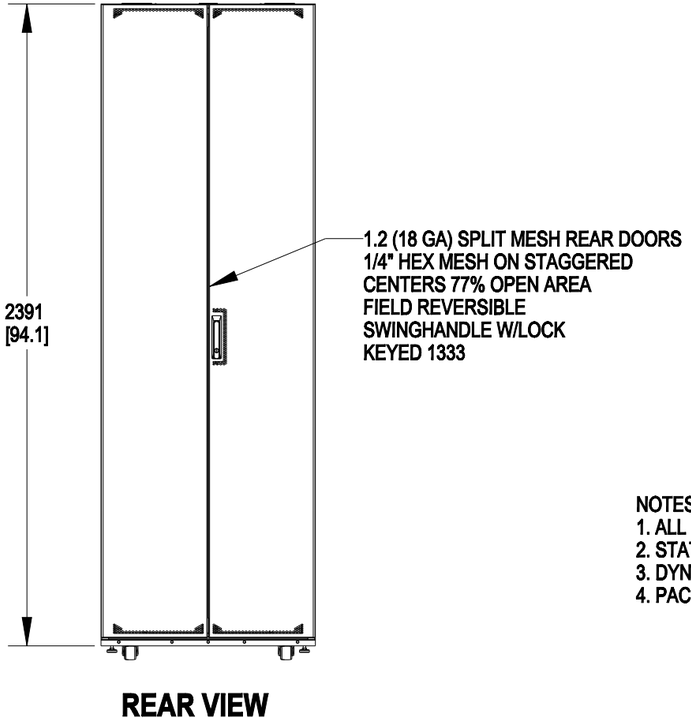

REAR VIEW

NOTES:
1. ALL DIMENSIONS ARE MM (INCH), TOLERANCES ±2.5 (±0.1)
2. STATIC WEIGHT CAPACITY: 1361 KG (3000 LBS)
3. DYNAMIC WEIGHT CAPACITY: 1021 KG (2250 LBS)
4. PACKAGE OF M6 SCREWS, CAGE NUTS INCLUDED.

VR3359

VR3359-SUBTL
SUBTL VR 52UX800X1200

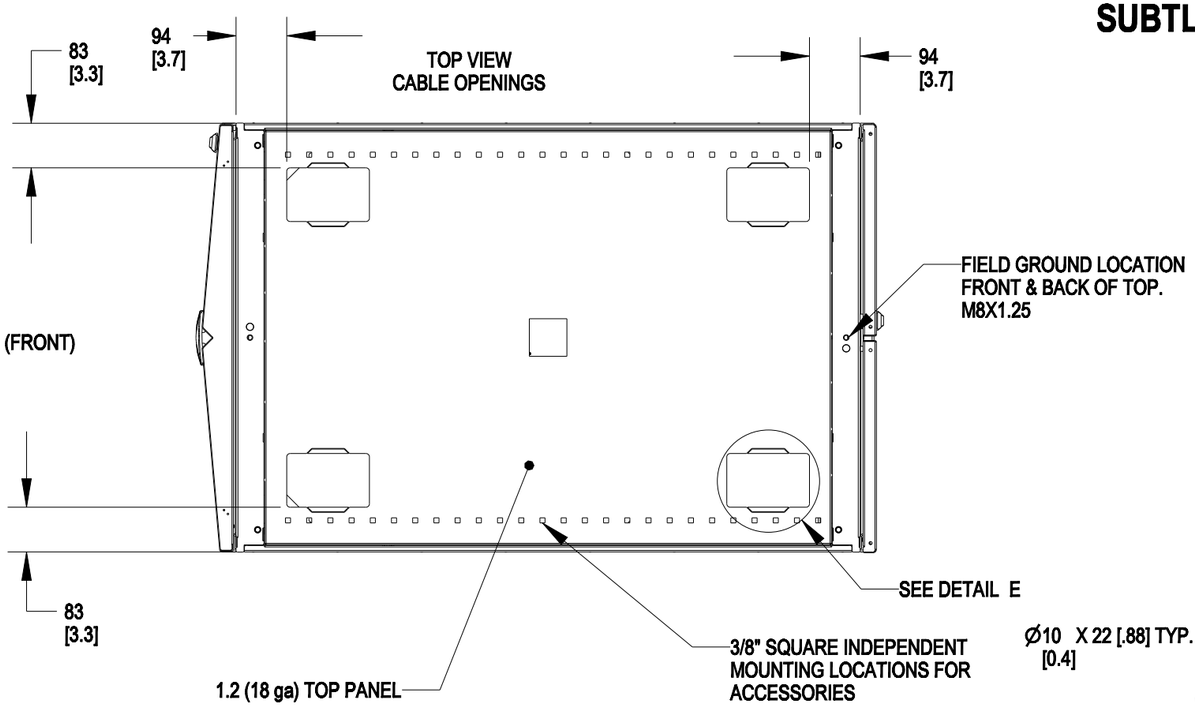

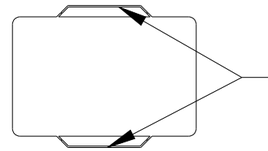

DETAIL E
SCALE 0.200
TYPICAL (4) PLACES
EDGE GUARD SUPPLIED WITH RACKS

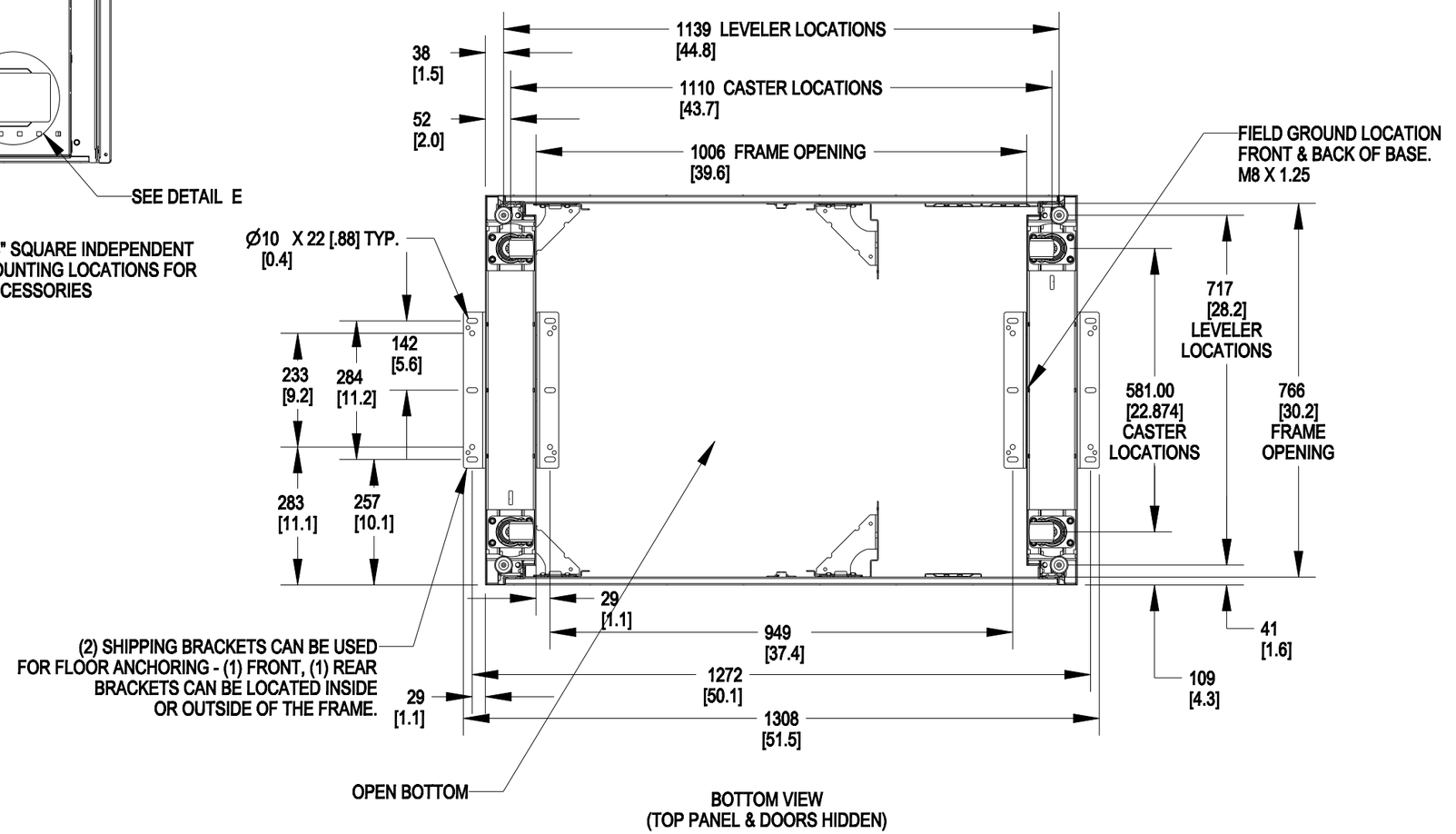

BOTTOM VIEW
(TOP PANEL & DOORS HIDDEN)

VR3359

VR3359-SUBTL
SUBTL VR 52UX800X1200

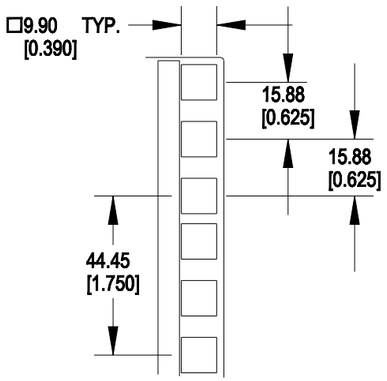

DETAIL B
SCALE 0.600
EIA RAIL DETAIL

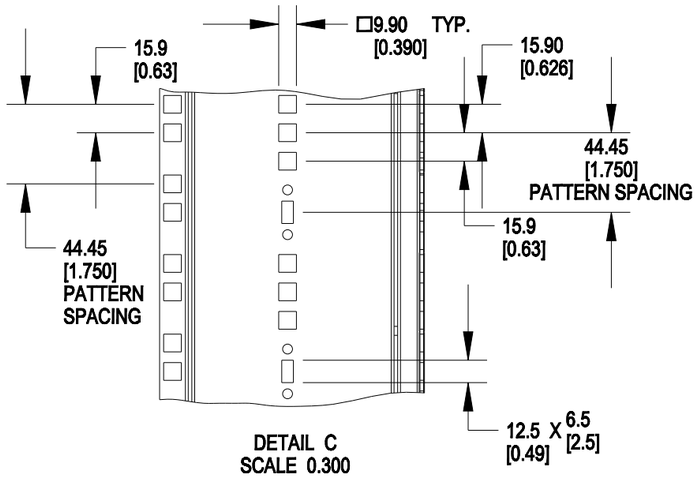

DETAIL C
SCALE 0.300
OPTIONAL
ACCESSORY
LOCATIONS

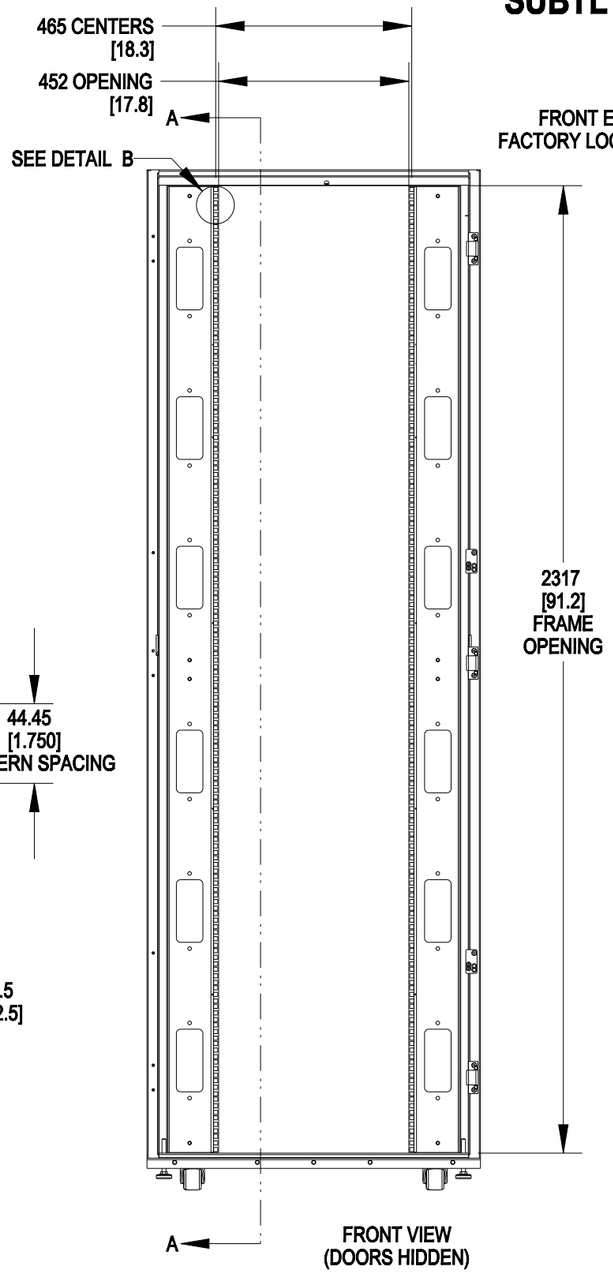

FRONT VIEW
(DOORS HIDDEN)

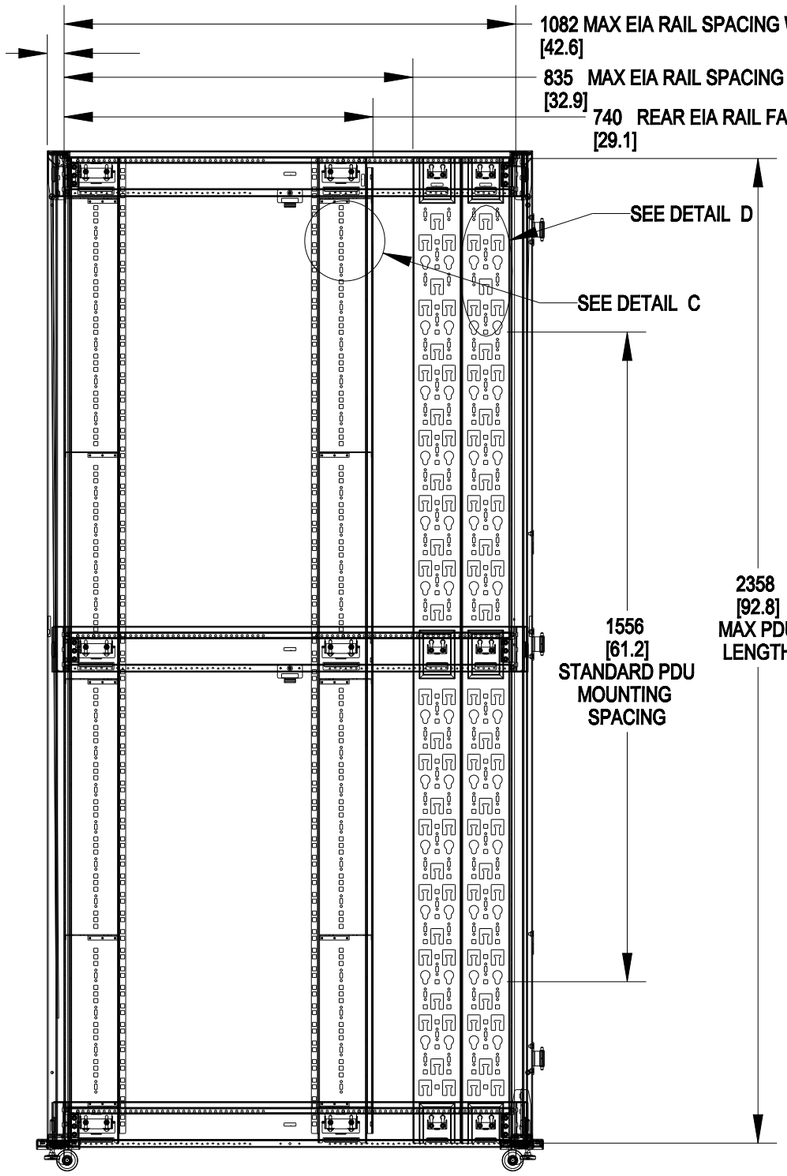

SECTION A-A

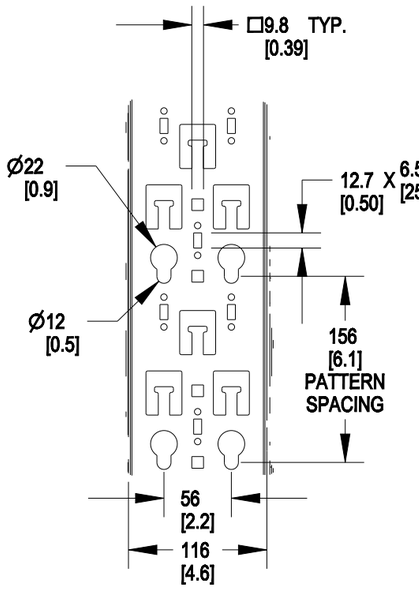

DETAIL D
SCALE 0.200
PDU BRACKET
DETAIL