VR3105

VR3105-SUBMITTAL
SUBTL VR 45U X 600 X 1100

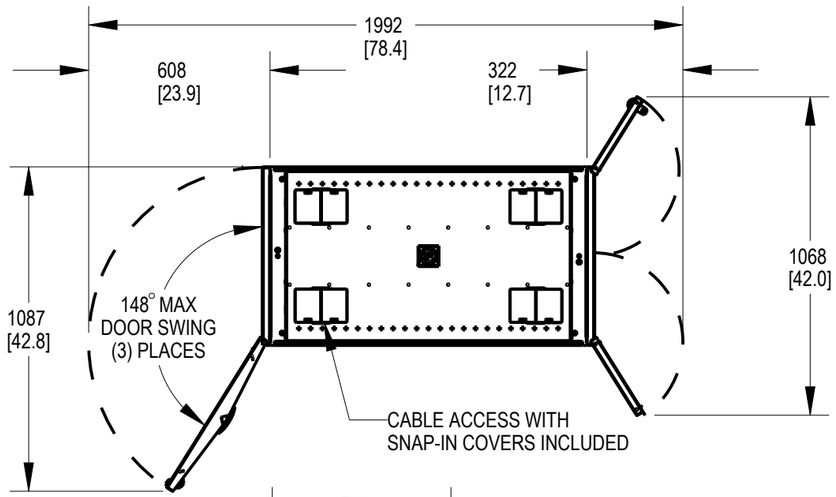

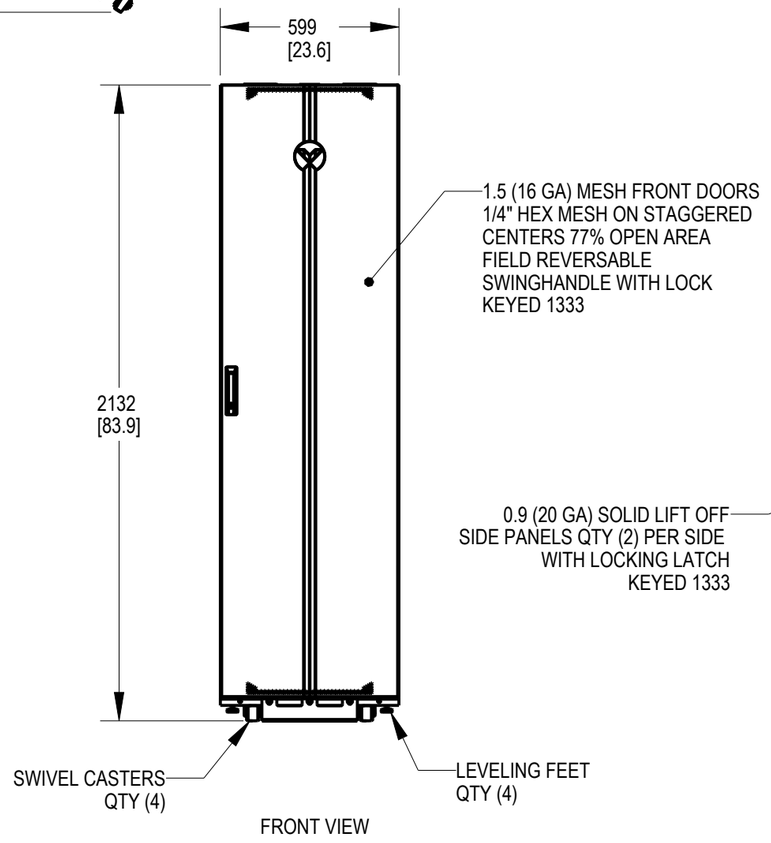

FRONT VIEW

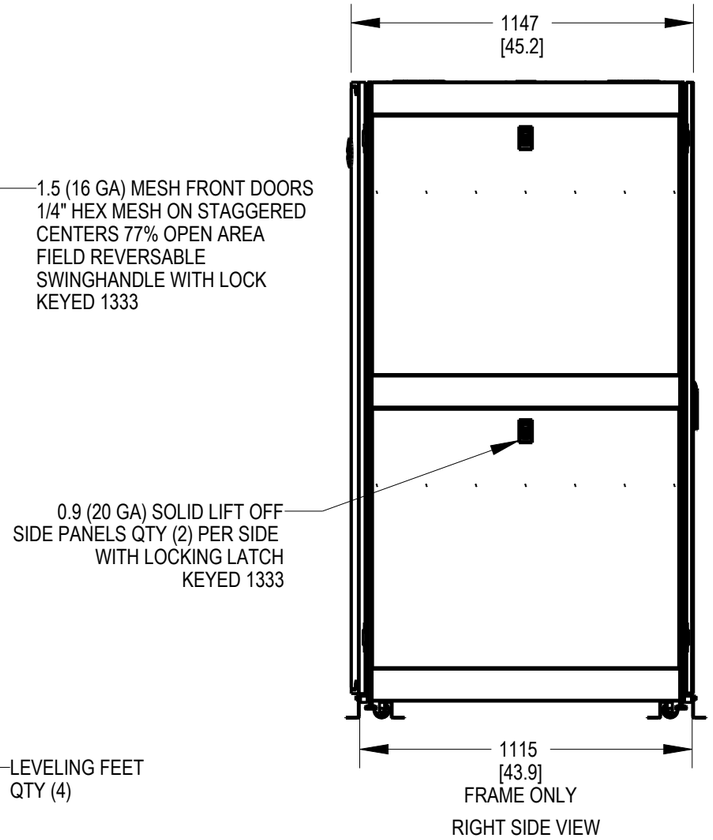

RIGHT SIDE VIEW

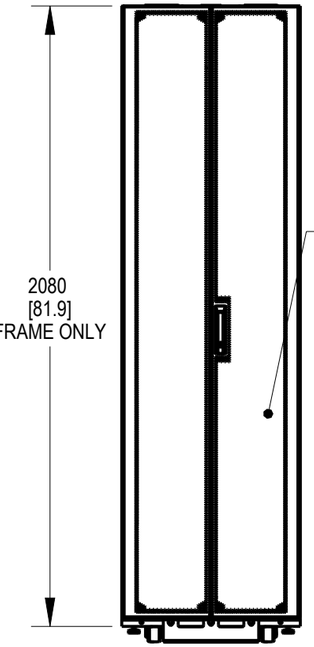

REAR VIEW

NOTES:
1. ALL DIMENSION ARE MM [INCH], TOLERANCES ±2.5 [±0.1]
2. UNIT WEIGHT: 143KG [315 LBS]
3. STATIC WEIGHT CAPACITY 1361 KG [3000 LBS]
4. DYNAMIC WEIGHT CAPACITY: 1021 KG [2250 LBS]
5. PACAKAGE OF M6 SCREWS, CAGE NUTS INCLUDED.

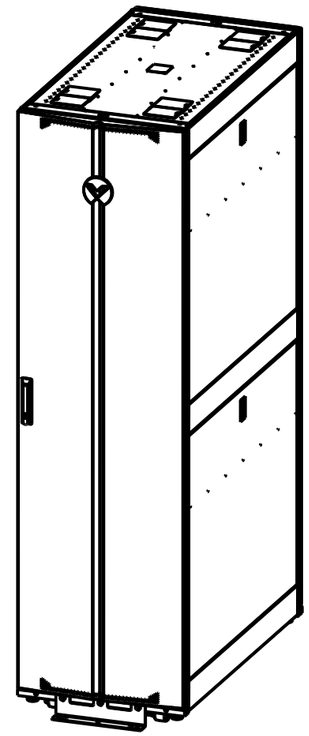

3D VIEW

VR3105 OPTIONAL MODEL DESCRIPTION BY SUFFIX	
RACK MODEL	DESCRIPTION
VR3105-001	NO FRONT DOOR, NO REAR DOOR, NO RIGHT SIDE PANELS, NO LEFT SIDE PANELS
VR3105-002	NO FRONT DOOR, NO REAR DOOR
VR3105-003	NO FRONT DOOR
VR3105-004	NO REAR DOOR
VR3105-005	NO RIGHT SIDE PANELS
VR3105-006	NO LEFT SIDE PANELS
VR3105-007	NO RIGHT SIDE PANELS, NO LEFT SIDE PANELS
VR3105-013	NO FRONT DOOR, NO REAR DOOR, NO SIDE PANELS, NO ROOF

VR3105

VR3105-SUBMITTAL
SUBTL VR 45U X 600 X 1100

TOP VIEW
CABLE OPENINGS

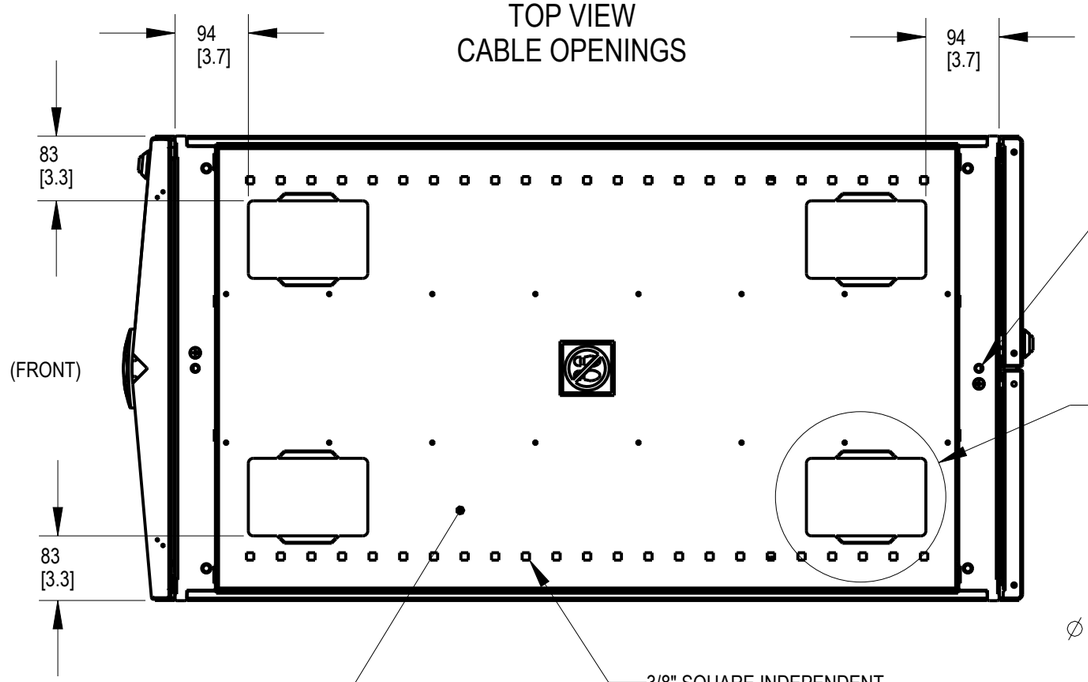

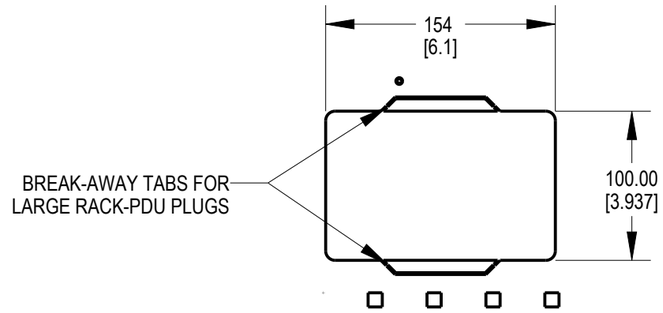

DETAIL A
SCALE 1:4
TYPICAL (4) PLACES
EDGE GUARD SUPPLIED WITH RACK

BOTTOM VIEW

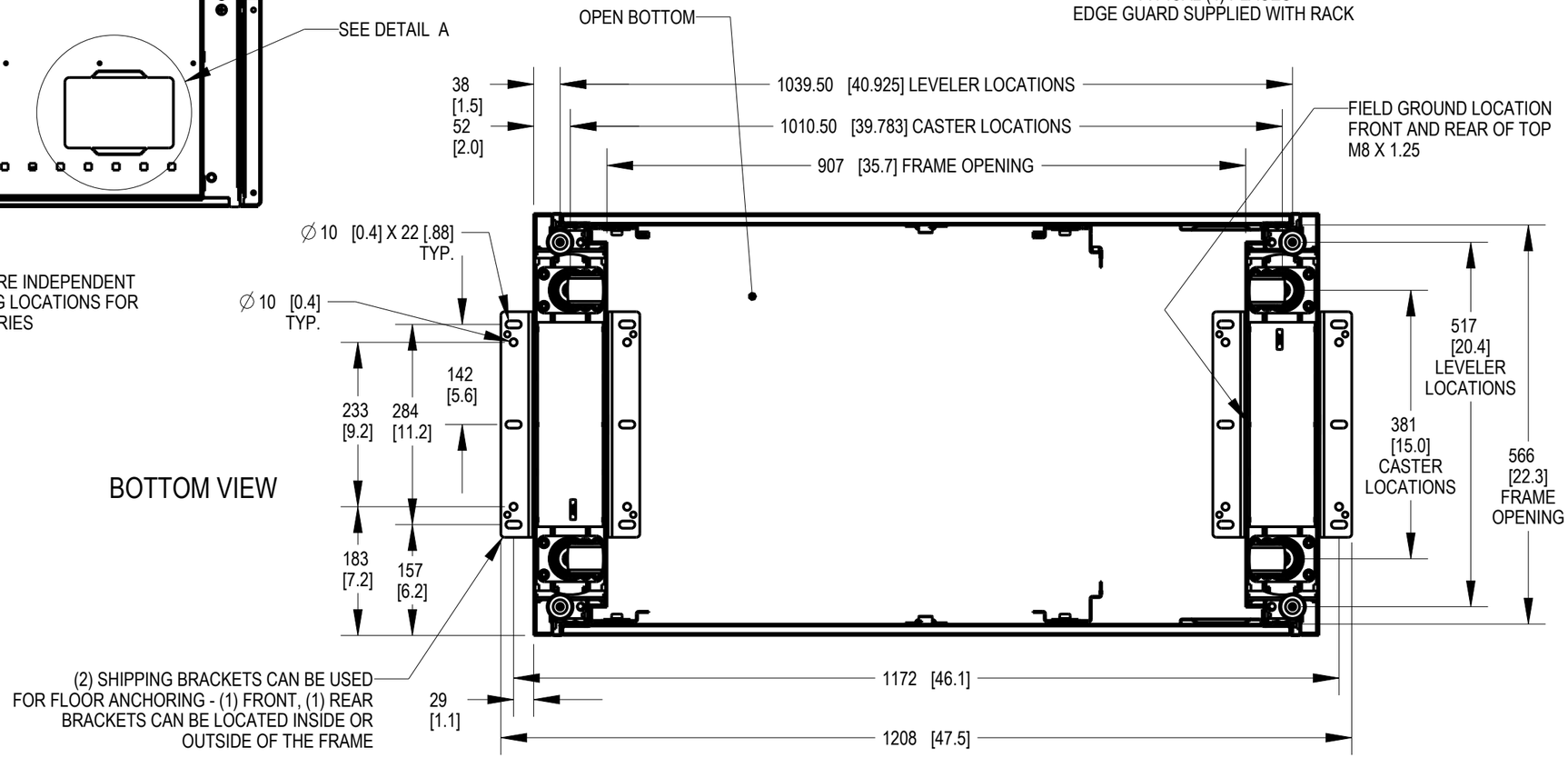

VR3105

VR3105-SUBMITTAL
SUBTL VR 45U X 600 X 1100

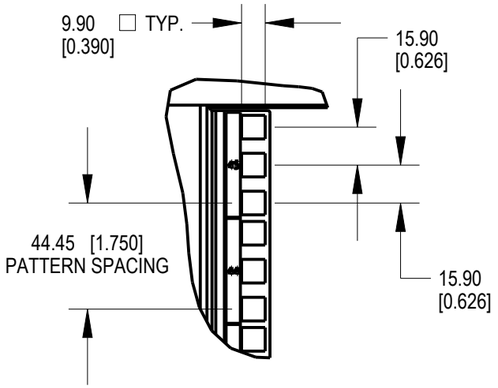

DETAIL C
SCALE 2:5
EIA RAIL DETAIL

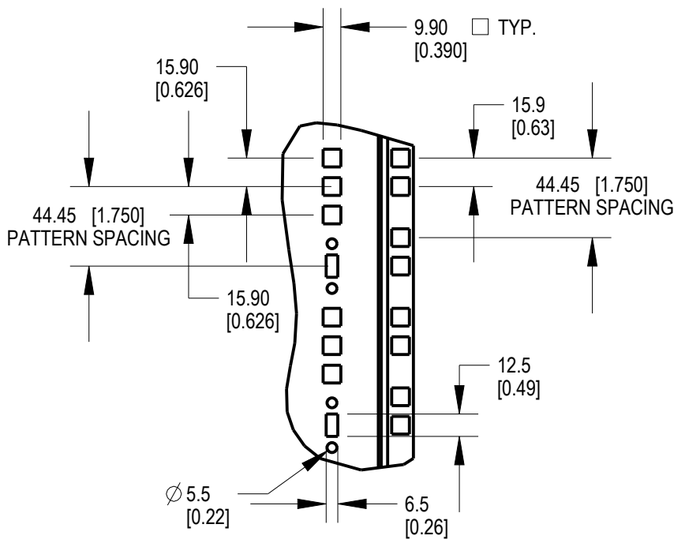

DETAIL D
SCALE 3:10
OPTIONAL ACCESSORY
LOCATIONS

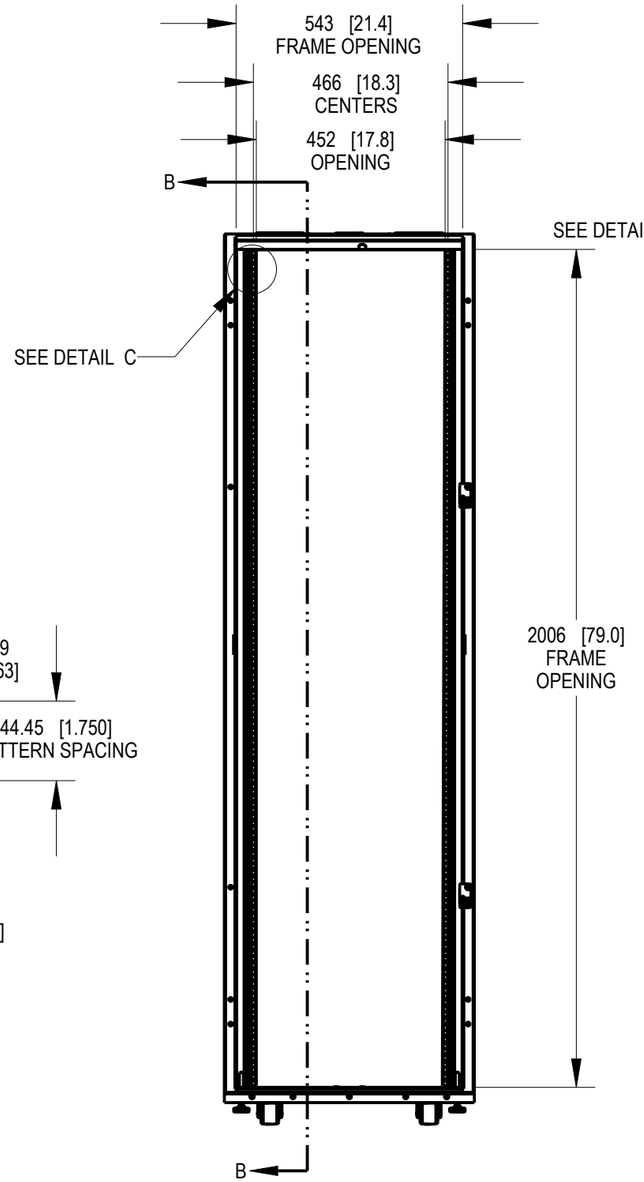

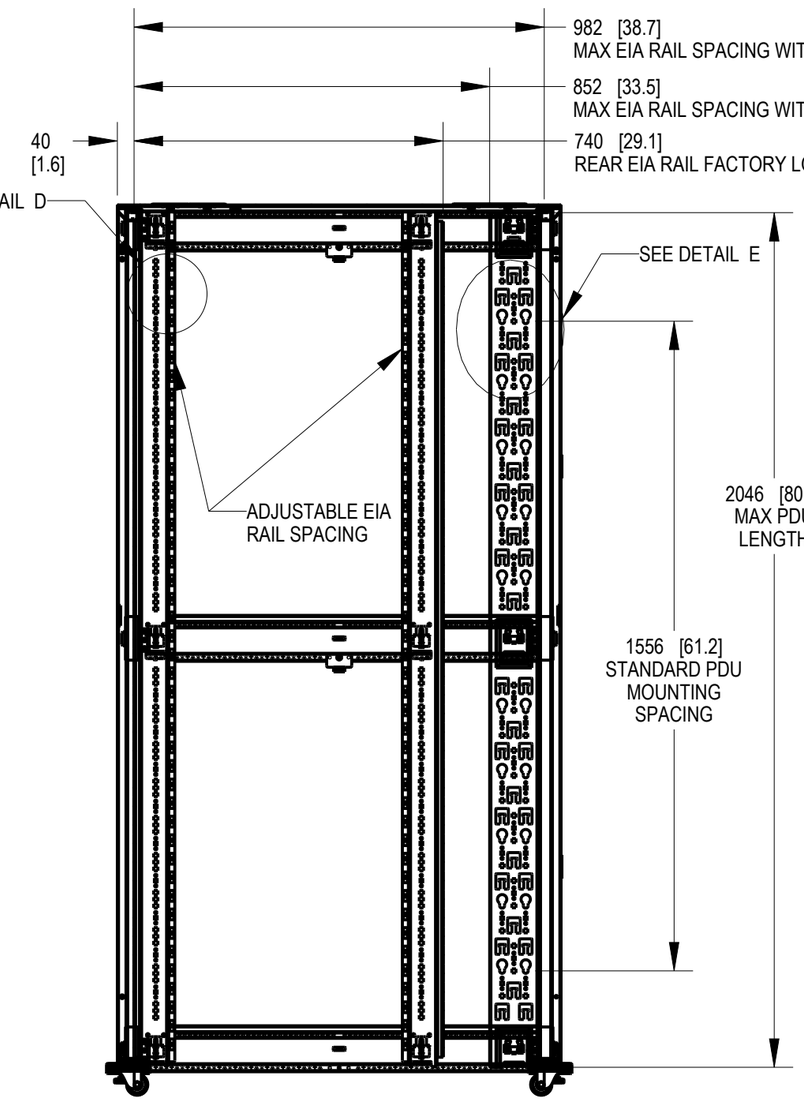

SECTION B-B

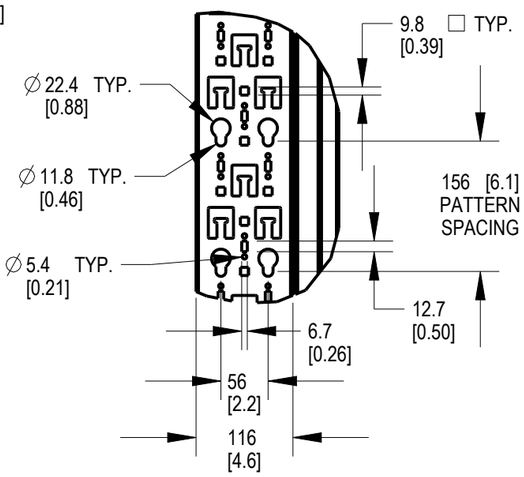

DETAIL E
SCALE 7:50
PDU BRACKET DETAIL