VR3305

VR3305-SUBMITTAL
SUBTL VR 45U X 600 X 1200

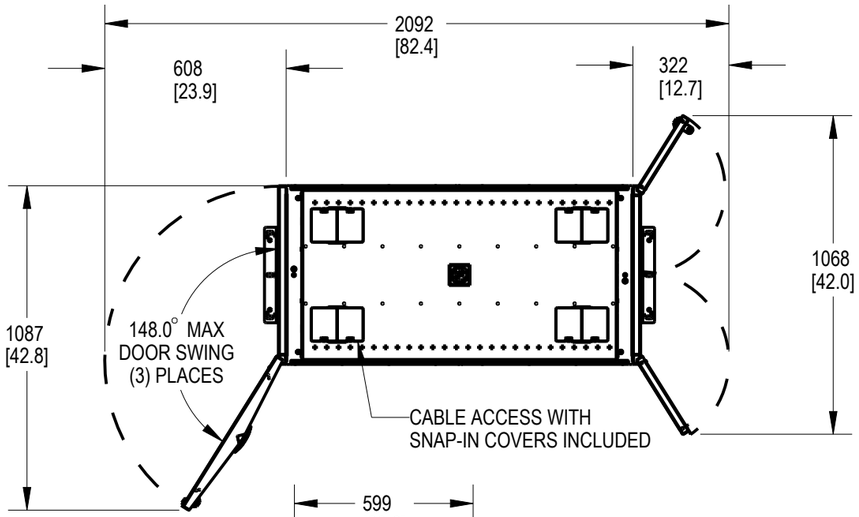

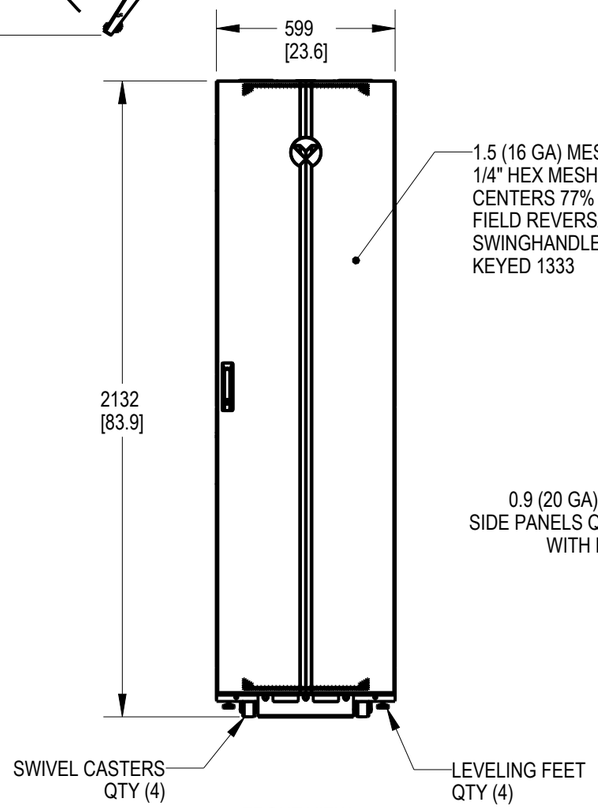

FRONT VIEW

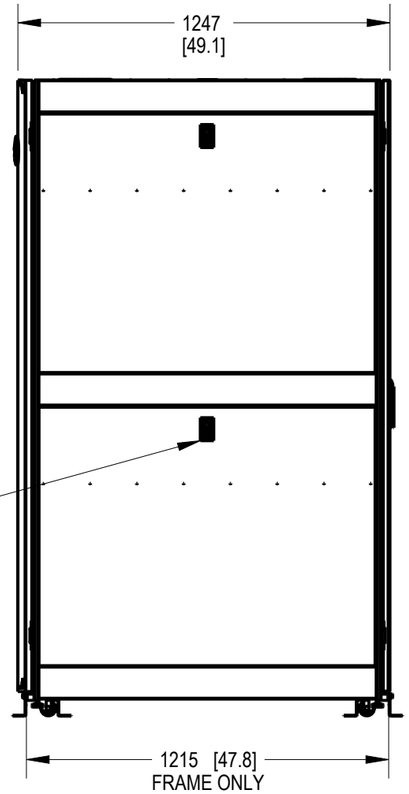

RIGHT SIDE VIEW

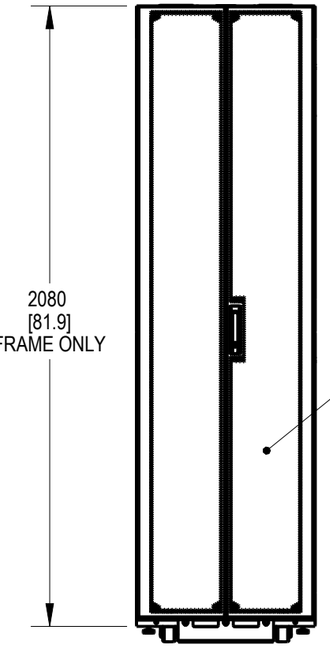

REAR VIEW

VR3305 OPTIONAL MODEL DESCRIPTION BY SUFFIX	
RACK MODEL	DESCRIPTION
VR3305-001	NO FRONT DOOR, NO REAR DOOR, NO RIGHT SIDE PANELS, NO LEFT SIDE PANELS
VR3305-002	NO FRONT DOOR, NO REAR DOOR
VR3305-003	NO FRONT DOOR
VR3305-004	NO REAR DOOR
VR3305-005	NO RIGHT SIDE PANELS
VR3305-006	NO LEFT SIDE PANELS
VR3305-007	NO RIGHT SIDE PANELS, NO LEFT SIDE PANELS
VR3105-013	NO FRONT DOOR, NO REAR DOOR, NO SIDE PANELS, NO ROOF

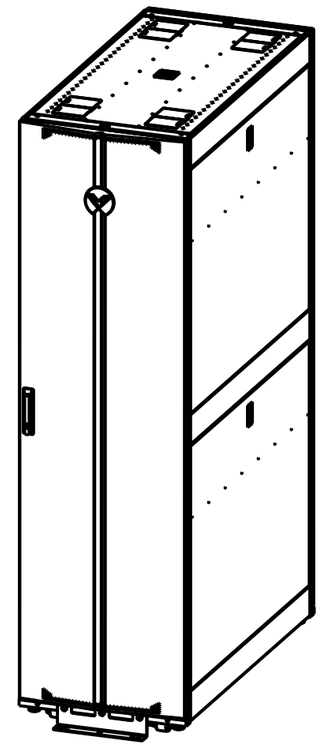

3D VIEW

NOTES:
1. ALL DIMENSION ARE MM [INCH], TOLERANCES ±2.5 [±0.1]
2. UNIT WEIGHT: 154 KG [340 LBS]
3. STATIC WEIGHT CAPACITY 1361 KG [3000 LBS]
4. DYNAMIC WEIGHT CAPACITY: 1021 KG [2250 LBS]
5. PACAKAGE OF M6 SCREWS, CAGE NUTS INCLUDED.

VR3305

VR3305-SUBMITTAL
SUBTL VR 45U X 600 X 1200

TOP VIEW
CABLE OPENINGS

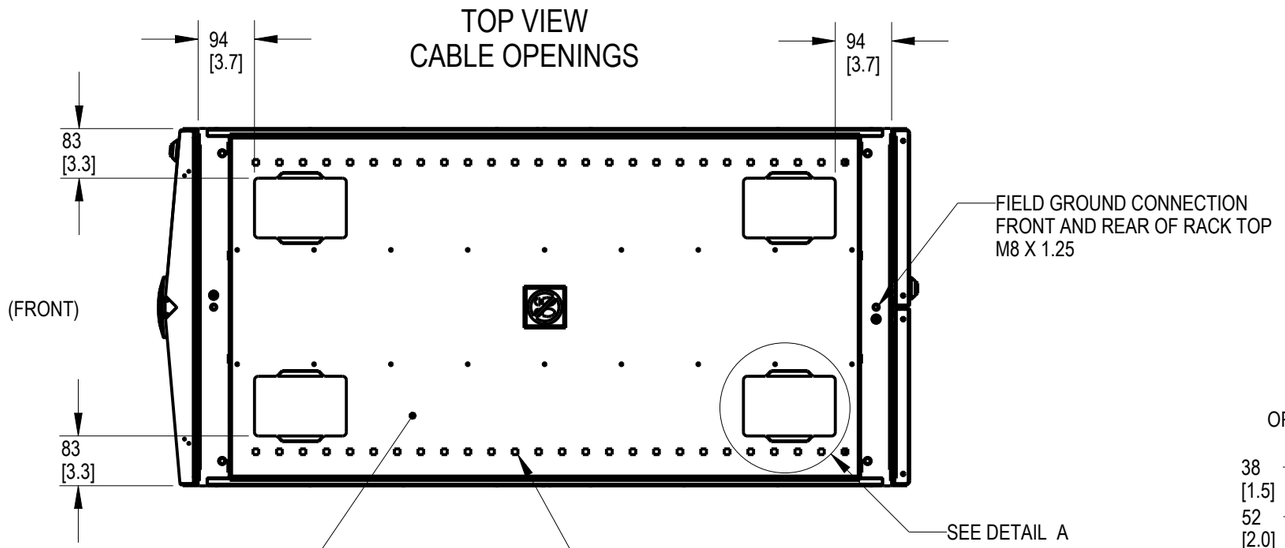

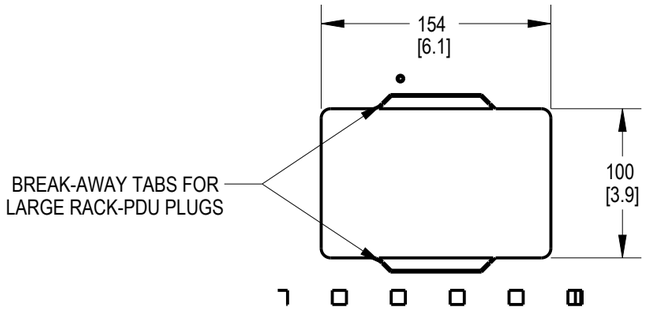

DETAIL A
SCALE 1:4
TYPICAL (4) PLACES
EDGE GUARD SUPPLIED WITH RACK

BOTTOM VIEW

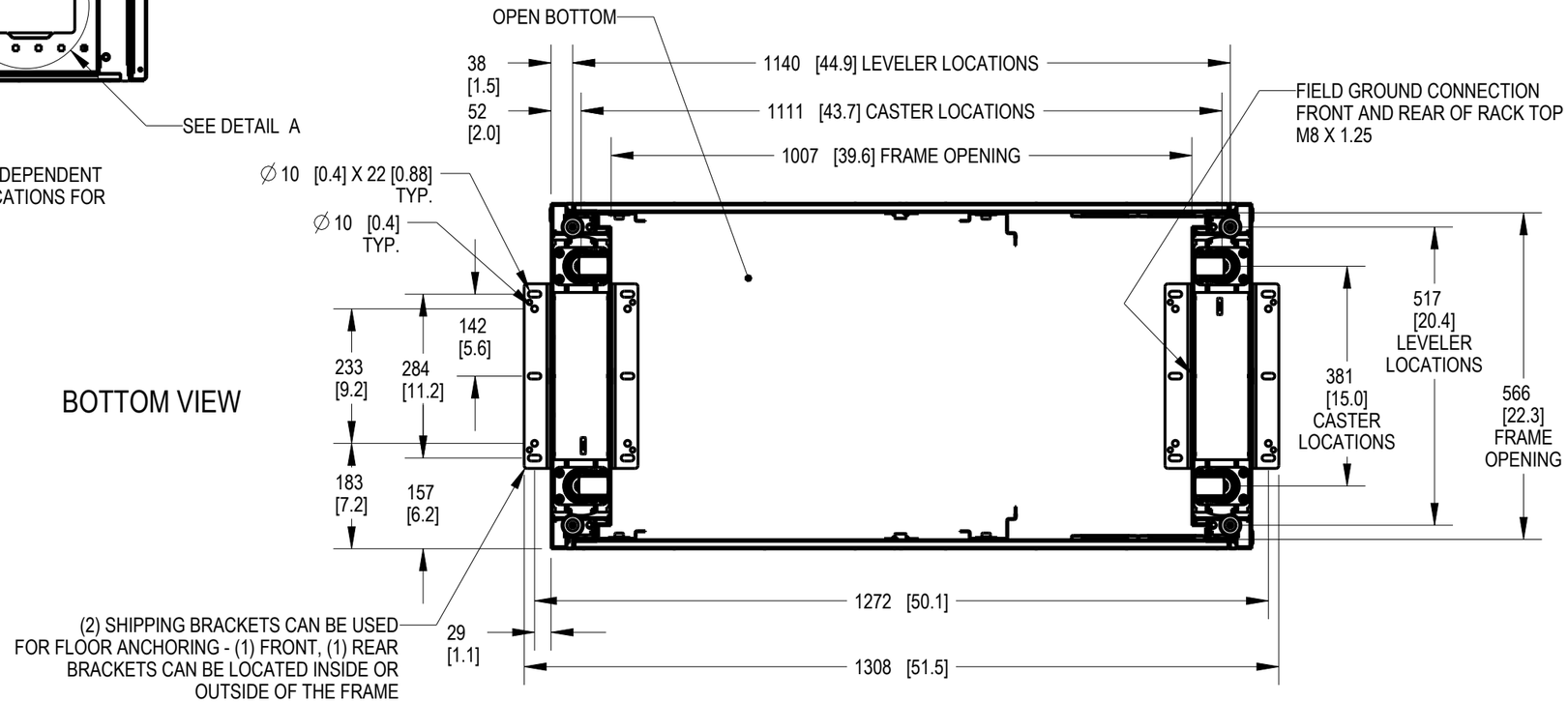

VR3305

VR3305-SUBMITTAL
SUBTL VR 45U X 600 X 1200

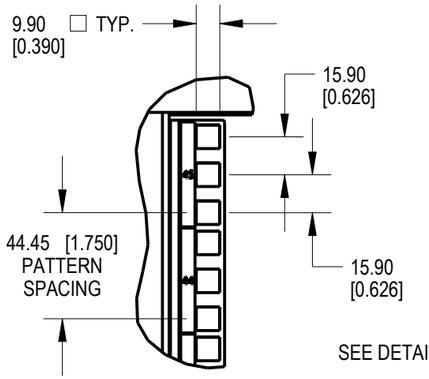

DETAIL C
SCALE 2:5
EIA RAIL DETAIL

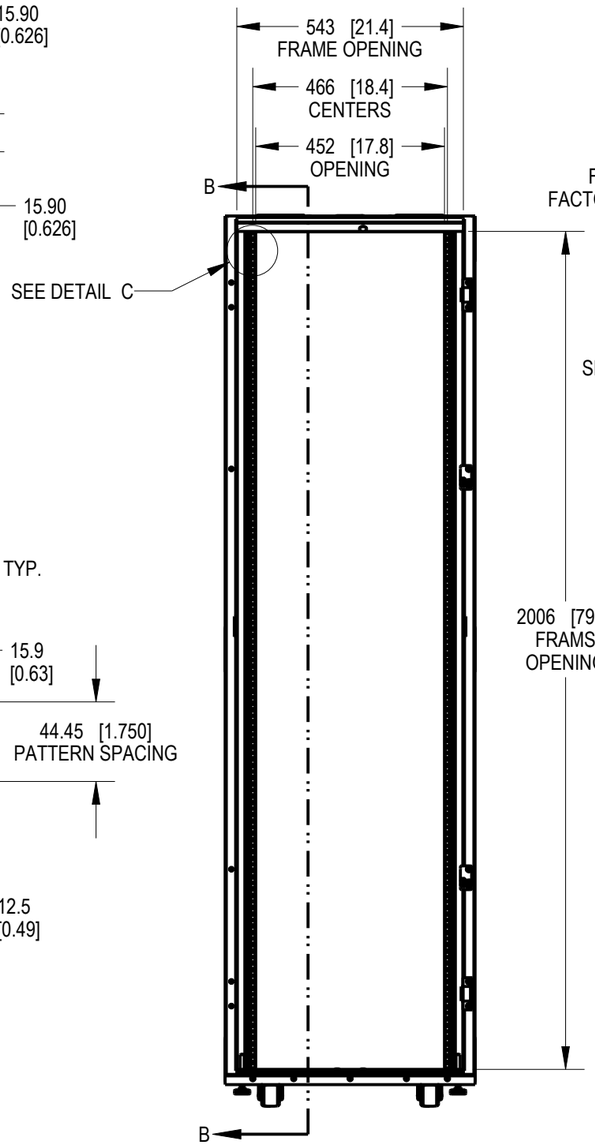

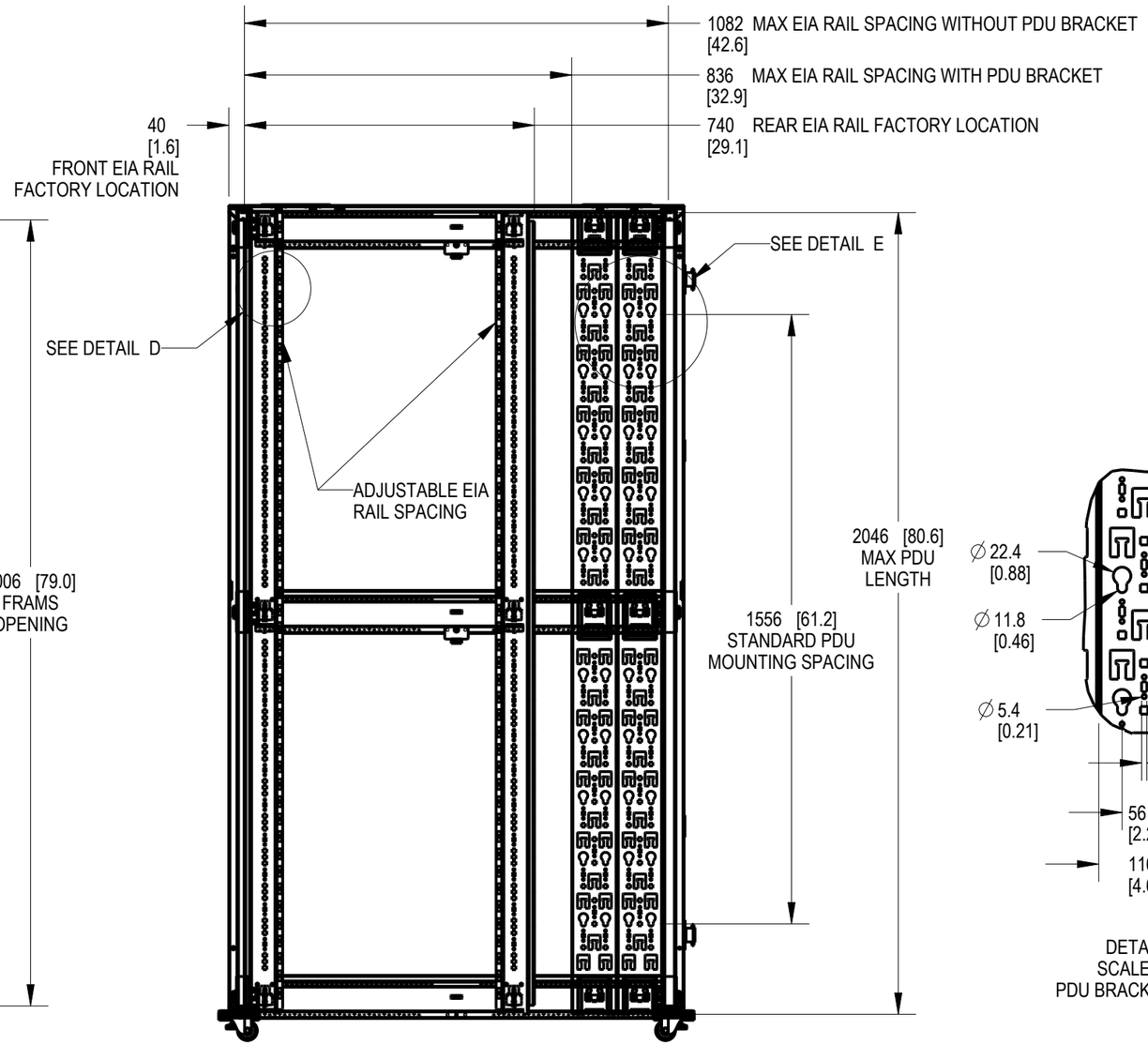

SECTION B-B

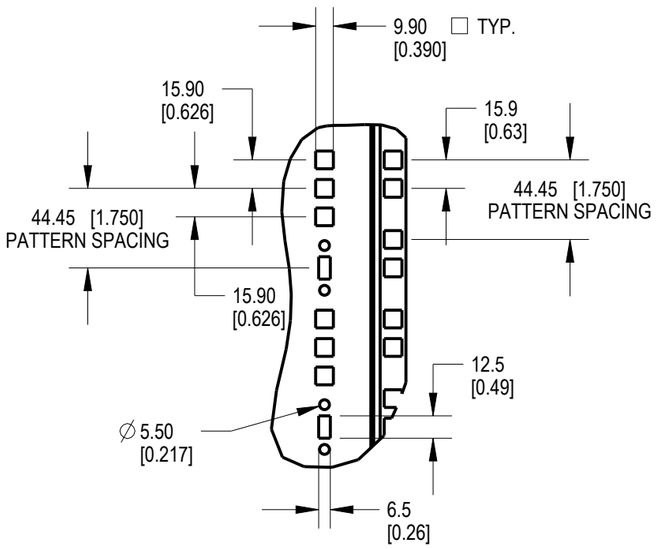

DETAIL D
SCALE 3:10
OPTIONAL ACCESSORY
LOCATIONS

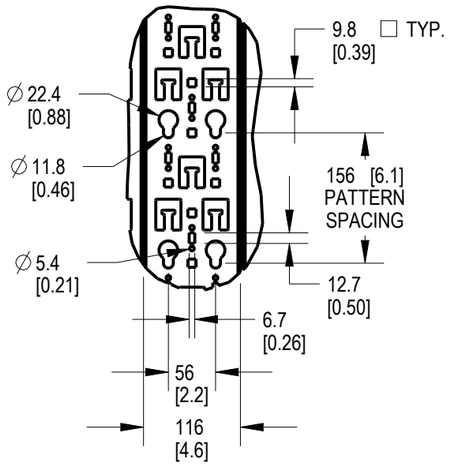

DETAIL E
SCALE 7:50
PDU BRACKET DETAIL