SYSTEM OVERVIEW

Description: The Vertiv™ NetSure™ 5100 DC Power System is an integrated power system containing rectifiers (-48 VDC output), optional solar converters (-48 VDC output), optional converters (+24 VDC or -58 VDC output), optional inverter system (120 VAC output), intelligent control, metering, monitoring, and distribution. This power system is available in configurations for 19" and 23" rack mounting.

This power system is designed to power a load while charging a positive grounded battery. This power system is capable of operating in a batteryless installation or off battery for maintenance purposes. The power system is designed for operation with the positive output grounded.

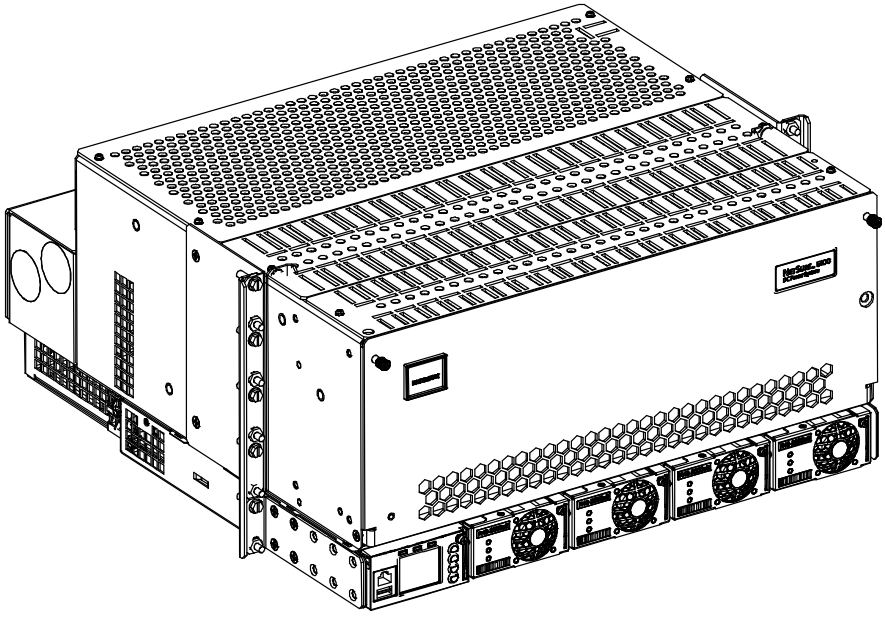

© 2026 Vertiv Group Corp. All Rights Reserved.

This system consists of the following components.

- **DC Distribution Cabinet**

  The system always includes a distribution cabinet, which provides DC distribution through fuses and/or circuit breakers. The distribution cabinet is factory mounted in the optional relay rack specified when ordered. Different sizes of distribution cabinets are available to accept from one (1) to two (2) distribution panels. A variety of distribution panels are available that provide load distribution, battery distribution, and dual voltage load distribution for use with -48 VDC to +24 VDC converters and -48 VDC to -58 VDC converters. These distribution panels are configured to accept bullet nose type circuit breakers and TPS/TLS fuseholders. The distribution cabinet may be equipped with low voltage load disconnect (LVLD) and/or low voltage battery disconnect (LVBD) (depending on available configuration options).

- **Controller**

  NCU (NetSure Control Unit) Controller: The NCU controller provides power system control (including optional low voltage battery disconnect (LVBD) and low voltage load disconnect (LVLD) control), rectifier module control (including a charge control function), solar converter module control, -48 VDC to +24 VDC converter module control, -48 VDC to -58 VDC converter module control, -48 VDC to 120 VAC inverter module control, metering functions, monitoring functions, local/remote alarm functions, and connections for binary inputs and programmable relay outputs. The controller also supports rectifier temperature compensation if the system is equipped with a temperature probe(s). Temperature probe(s) may also be designated to monitor ambient temperature and/or battery temperature. The controller also provides data acquisition, system alarm management, and advanced battery and energy management. The controller contains a color TFT display and keypad for local access. The controller provides an Ethernet port and comes with comprehensive webpages for remote access. The controller has SNMP V3 capability for remote system management. The controller supports software upgrade via its USB port. Refer to the NCU Controller Instructions (UM1M830BNA) for more information.

- **DC Output Module Mounting Assembly**

  The system contains one (1) to five (5) module mounting assemblies (depending on system configuration, see “List Descriptions” starting on page 20), which may house rectifier modules, optional solar converter modules, optional -48 VDC to +24 VDC converter modules, optional -48 VDC to
  -58 VDC converter modules, and a controller (depending on configuration, see “List Descriptions” in Power Data Sheet PD588705300). Refer to PD588705300 for additional information.

- **Rectifier Modules**

  The system contains rectifier modules, which provide load power, battery float current, and battery recharge current during normal operating conditions. Refer to the Rectifier Instructions (UM1R482000E3) for more information.

- **Optional Solar Converter Modules**

  The system may contain solar converter modules (depending on configuration, see “List Descriptions” starting on page 20), which provide load power, battery float current, and battery recharge current during solar conditions. Refer to the Solar Converter Instructions (UM1S482000E3) for more information.

- **Optional -48 VDC to +24 VDC Converter Modules**

  Where +24 VDC load power is also required, converter modules are available (depending on configuration, see “List Descriptions” starting on page 20). These converters operate from the main -48 VDC system bus to provide +24 VDC load power. Refer to the Converter Instructions (UM1C48241500) for more information.

- **Optional -48 VDC to -58 VDC Converter Modules**

  Where -58 VDC load power is also required, converter modules are available (depending on configuration, see “List Descriptions” starting on page 20). These converters operate from the main -48 VDC system bus to provide -58 VDC load power. Refer to the Converter Instructions (UM1C48582000P3) for more information.

© 2026 Vertiv Group Corp. All Rights Reserved.

- **Optional Inverter System**

  120 VAC @ up to 12 kVA Inverter System

  The system contains one or more inverter module mounting shelves and AC distribution.

  The inverter system can be set to operate in one of the three input power modes: AC Input Power Mode, DC Input Power Mode, and DC Only Input Power Mode.

  - In the AC Input Power Mode, each inverter module operates with the commercial AC input to supply 120 VAC power to the loads. In the event commercial AC power fails or becomes abnormal, the inverter modules immediately transfer operation with the 48 VDC input to provide power to the inverters.
  - In the DC Input Power Mode, each inverter module operates with the 48 VDC input to supply 120 VAC power to the loads. In the event DC power fails or becomes abnormal or an inverter module fails, the inverter module immediately transfers operation with the commercial 120 VAC input to provide power to the inverters.
  - In the DC Only Input Power Mode, each inverter module operates with the 48 VDC input to supply 120 VAC power to the loads. In the event DC power fails or becomes abnormal or an inverter module fails, the inverter module shuts off.

  The inverter system contains an EPO (Emergency Power Off) function. Connection points for a normally closed external EPO switch are provided on the customer interface board. If an external EPO switch is wired to the customer interface board, activating the switch to open the circuit activates the EPO function. The EPO function shuts down and locks out the inverters. When the EPO switch is returned to normal (closed loop), the inverters remain off. The inverters will restart when the AC and DC power inputs are removed and restored after 30 seconds or more (until the LEDs on the modules extinguish) (depending on the synchronizing time with the system). (Note that there is an EPO shorting link factory installed that can be replaced with a customer provided switch.)

  Note: *The power system's ESTOP function described in the power system Installation Manual (IM582137100) is factory wired into the inverter system's EPO function. If an EPO switch is not wired, the inverter system will still respond to the power system's ESTOP function.*

  This inverter system consists of the following components. Note that the inverter systems are pre-configured and do not have expansion shelves. Note the ratings are not only determined by the maximum number of inverters the system can be provided with, but also the rating of the AC distribution panel. The overall system rating cannot exceed the AC distribution panel rating.

  - **Inverter Module Mounting Shelf(s)**

    The inverter system consists of one or more inverter module mounting shelves, depending on power rating. The inverter module mounting shelves house the inverter modules.

  - **Inverter Modules**

    The inverter system contains 1 kVA/1 kW inverter modules (1 kVA at 40 °C and 0.5 kVA at 65 °C), supplying 120 VAC power from a commercial AC power source or from a 48 VDC input. Refer to the Inverter Instructions (UM1I1201000) for more information.

  - **AC Load Distribution Shelf**

    The inverter system consists of one or more AC load distribution shelves, depending on power rating. A choice of a bulk output AC load distribution shelf or a NEMA receptacle output AC load distribution shelf is provided.

© 2026 Vertiv Group Corp. All Rights Reserved.

The Power Distribution Center...

- List 20, 25 (One Row Distribution Cabinet) is rated...
  -48 VDC; 400 A at 40 °C.
  -48 VDC; 300 A at 65 °C.
- List 27 (One Row Distribution Cabinet) is rated...
  Charge Ratings:
  -48 VDC; 600 A and +24 VDC; 63 A at 40 °C.
  -48 VDC; 525 A and +24 VDC; 50 A at 65 °C.
  Discharge Ratings:
  -48 VDC; 771 A at 40 °C.
  -48 VDC; 600 A at 65 °C.
- List 21 (Two Row Distribution Cabinet) is rated...
  -48 VDC; 600 A (400 A maximum per row) at 40 °C.
  -48 VDC; 400 A (300 A maximum per row) at 65 °C.
- List 26 (Two Row Distribution Cabinet) is rated...
  -48 VDC; 600 A (400 A maximum per row) and +24 VDC; 400 A or -58 VDC (max.); 340 A (max.) at 40°C.
  -48 VDC; 400 A (300 A maximum per row) and +24 VDC; 300 A or -58 VDC (max.); 270 A (max.) at 65°C.

© 2026 Vertiv Group Corp. All Rights Reserved.

General Specifications

See detailed specifications starting on page 155.

Family:	NetSure™
System Spec. No.:	582137100
System Model:	NetSure 5100
System Rectifier AC Input Voltage:	Nominal 120 VAC / 208 VAC / 240 VAC, single phase, 3-wire, 50 Hz / 60 Hz, with an operating range of 100 VAC to 250 VAC. Acceptable input frequency range is 45 Hz to 65 Hz. Permitted Variation: 85 VAC to 300 VAC.
System Solar Converter DC Input Voltage:	140 VDC to 200 VDC / 200 VDC to 400 VDC
System DC Output Capacity:	
System:	600 A @ -48 VDC and 400 A @ +24 VDC or 340 A (max.) @ -58 VDC, maximum at 40°C. 400 A @ -48 VDC and 300 A @ +24 VDC or 270 A (max.) @ -58 VDC, maximum at 65°C.
DC Distribution Panel:	400 A, maximum for -48 VDC and +24 VDC; 340A, maximum for -58 VDC, Maximum at 40°C. 300 A, maximum for -48 VDC and +24 VDC and -58 VDC maximum at 65°C.
588705300 Assembly Ratings:	See PD588705300.
1R482000E3 Rectifier Rating:	See UM1R482000E3.
1S482000E3 Solar Converter Rating:	See UM1S482000E3.
1C48241500 Converter Rating:	See UM1C48241500.
1C48582000P3 Converter Rating:	See UM1C48582000P3.
System Agency Approval:	UL 1801 Listed (“c UL”), NEBS
Framework Type:	Rack Mounted in a Relay Rack or Cabinet
Mounting Width:	See “Mechanical Specifications” starting on page 158.
Mounting Depth:	See “Mechanical Specifications” starting on page 158.
Access:	Front for Operation Front and Rear for Installation and Maintenance
Supplemental Bay(s) Available:	None
Control:	Microprocessor
Color:	Bay and Module Faceplates: Textured Gray Module Mounting Assembly and Module Bodies: Bright Zinc Plating
Environment:	-40 °C to +65 °C (-40 °F to +149 °F)

© 2026 Vertiv Group Corp. All Rights Reserved.

Optional Inverter System:

AC Input Voltage:	Nominal 120 VAC, single phase, 50 Hz or 60 Hz. Operating range 96 VAC to 140 VAC. Acceptable frequency range 47 Hz to 53 Hz or 57 Hz to 63 Hz.
DC Input Voltage:	Nominal -48 VDC. Operating range -42 VDC to -58 VDC.
AC Output Voltage:	120 VAC, 50 Hz or 60 Hz
AC Output Capacity:	582137100 List 50: 5 kVA, maximum 582137100 List 51: 5 kVA, maximum 582137100 List 52: 6 kVA, maximum 582137100 List 53: 6 kVA, maximum (5.76 kVA per NEC breaker de-rating) 582137100 List 54: 10 kVA, maximum 582137100 List 55: 10 kVA, maximum 582137100 List 56: 12 kVA, maximum 582137100 List 57: 12 kVA, maximum (11.5 kVA per NEC breaker de-rating)
1I1201000 Inverter Rating:	See UM1I1201000.
Environment:	-40 °C to +65 °C (-40 °F to +149 °F)

© 2026 Vertiv Group Corp. All Rights Reserved.

TABLE OF CONTENTS

SYSTEM OVERVIEW....1

MAIN COMPONENTS ILLUSTRATIONS....12
- Typical System with a 19" 1-Row Distribution Cabinet (List 20)....12
- Typical System with a 19" 2-Row Distribution Cabinet (List 21)....13
- Typical System with a 23" 1-Row Distribution Cabinet (List 25)....14
- Typical System with a 23" 2-Row Distribution Cabinet (List 26)....15
- Typical System with a 23" 1-Row Distribution Cabinet (List 27)....16
- Typical Configured System with a 23" 1-Row or 2-Row Distribution Cabinet and Equipped with Solar Converter and Hybrid Connection Cabinets....17
- Optional Inverter System....18
  - List 50, 51, 52, 53....18
  - List 54, 55, 56, 57....19

LIST DESCRIPTIONS....20
- List Numbers....20
  - List 20: 1-Row Distribution Cabinet for 19-Inch Relay Rack Mounting....20
  - List 21: 2-Row Distribution Cabinet for 19-Inch Relay Rack Mounting....21
  - List 25: 1-Row Distribution Cabinet for 23-Inch Relay Rack Mounting....22
  - List 26: 2-Row Distribution Cabinet for 23-Inch Relay Rack Mounting....23
  - List 27: 1-Row Distribution Cabinet for 23-Inch Relay Rack Mounting....24
  - List 30: Shelf Rail Mounting Kits, Insulation Sheets, Output Busbar Kits, and Rear Cover Kits....25
  - List 33: Field Expansion Module Mounting Assembly (23") Configured with Rectifier and -48 VDC to +24 VDC Converter Module Mounting Positions or -48 VDC to -58 VDC Converter Module Mounting Positions and Molex Input Connectors....26
  - List 34: Field Expansion Module Mounting Assembly (23") Configured with Rectifier and/or Solar Converter Module Mounting Positions and Molex Input Connectors....27
  - List 36: Field Expansion Module Mounting Assembly (19") Configured with Rectifier and/or Solar Converter Module Mounting Positions and Molex Input Connectors....28
  - List 40: 19" Rectifier AC Input / Solar Converter DC Input Panel, Each Input Feeds One Module....29
  - List 45: 23" Rectifier AC Input / Solar Converter DC Input Panel, Each Input Feeds One Module....30
  - List 46: Rectifier AC Input Panel for 23" System, Each Input Feeds Two Rectifier Modules....31
  - List 50: Inverter System, 19", up to 5kVA maximum, Bulk Output....32
  - List 51: Inverter System, 19", up to 5kVA maximum, NEMA Outlet Output....32
  - List 52: Inverter System, 23", up to 6kVA maximum, Bulk Output....33
  - List 53: Inverter System, 23", up to 6kVA maximum (5.76kVA per NEC breaker de-rating), NEMA Outlet Output....33
  - List 54: Inverter System, 19", up to 10kVA maximum, Bulk Output....34
  - List 55: Inverter System, 19", up to 10kVA maximum, NEMA Outlet Output....34
  - List 56: Inverter System, 23", up to 12kVA maximum, Bulk Output....35
  - List 57: Inverter System, 23", up to 12kVA maximum (11.5kVA per NEC breaker de-rating), NEMA Outlet Output....35
  - List 60: 23" Hybrid Connection Cabinet....36
  - List 61: 23" Solar Connection Cabinet....38
  - List 70: Optional EIB (Controller Extended Interface Board), P/N MA455U41....39
  - List 93: Pre-Cabled Battery Tray for 23" Wide Relay Rack....39
  - List 94: Pre-Cabled Battery Tray for 19" Wide Relay Rack....44
  - List 500, 500TG: -48 VDC/-58 VDC Power System....47
  - List 501: -48 VDC/-58 VDC Power System....48
- Single Voltage Load Distribution Panel....49
  - List AA: -48 VDC Load Distribution Panel (24) -48 VDC Bullet/TPS/TLS Circuit Breaker/Fuse Load Positions....49
  - List AB: -48 VDC Load Distribution Panel (26) -48 VDC Bullet/TPS/TLS Circuit Breaker/Fuse Load Positions....50
  - List AN: -48 VDC Load Distribution Panel (19) -48 VDC Bullet/TPS/TLS Circuit Breaker/Fuse Load Positions....51
  - List AO: -48 VDC Load Distribution Panel (21) -48 VDC Bullet/TPS/TLS Circuit Breaker/Fuse Load Positions....52
  - List KG: Distribution Panel with (20) GMT Load Fuses....53
- Single Voltage Plus Battery Disconnect Distribution Panel....54
  - List BA: -48 VDC Load Distribution Plus -48 VDC Battery Disconnect Panel (18) -48 VDC Bullet/TPS/TLS Circuit Breaker/Fuse Load Positions (6) -48 VDC Bullet/TPS/TLS Circuit Breaker/Fuse Battery Positions....54
  - List BB: -48 VDC Load Distribution Plus -48 VDC Battery Disconnect Panel (6) -48 VDC Bullet/TPS/TLS Circuit Breaker/Fuse Load Positions (20) -48 VDC Bullet/TPS/TLS Circuit Breaker/Fuse Battery Positions....55

© 2026 Vertiv Group Corp. All Rights Reserved.

List BC: -48 VDC Load Distribution Plus -48 VDC Battery Disconnect Panel (16) -48 VDC Bullet/TPS/TLS Circuit Breaker/Fuse Load Positions (8) -48 VDC Bullet/TPS/TLS Circuit Breaker/Fuse Battery Positions 56
List BD: -48 VDC Load Distribution Plus -48 VDC Battery Disconnect Panel (16) -48 VDC Bullet/TPS/TLS Circuit Breaker/Fuse Load Positions (10) -48 VDC Bullet/TPS/TLS Circuit Breaker/Fuse Battery Positions 57
List BN: -48 VDC Load Distribution Plus -48 VDC Battery Disconnect Panel (14) -48 VDC Bullet/TPS/TLS Circuit Breaker/Fuse Load Positions (5) -48 VDC Bullet/TPS/TLS Circuit Breaker/Fuse Battery Positions 58
List BO: -48 VDC Load Distribution Plus -48 VDC Battery Disconnect Panel (12) -48 VDC Bullet/TPS/TLS Circuit Breaker/Fuse Load Positions (9) -48 VDC Bullet/TPS/TLS Circuit Breaker/Fuse Battery Positions 59
Dual Voltage Load Distribution Panel 60
List DA: -48 VDC / +24 VDC Load Distribution Panel (21) -48 VDC Bullet/TPS/TLS Circuit Breaker/Fuse Load Positions (4) +24 VDC Bullet/TPS/TLS Circuit Breaker/Fuse Load Positions 60
List DB: -48 VDC / +24 VDC Load Distribution Panel (17) -48 VDC Bullet/TPS/TLS Circuit Breaker/Fuse Load Positions (8) +24 VDC Bullet/TPS/TLS Circuit Breaker/Fuse Load Positions 61
List DC: -48 VDC / +24 VDC Load Distribution Panel (13) -48 VDC Bullet/TPS/TLS Circuit Breaker/Fuse Load Positions (12) +24 VDC Bullet/TPS/TLS Circuit Breaker/Fuse Load Positions 62
List DD: -48 VDC / +24 VDC Load Distribution Panel (9) -48 VDC Bullet/TPS/TLS Circuit Breaker/Fuse Load Positions (16) +24 VDC Bullet/TPS/TLS Circuit Breaker/Fuse Load Positions 63
List DE: -48 VDC / +24 VDC Load Distribution Panel (5) -48 VDC Bullet/TPS/TLS Circuit Breaker/Fuse Load Positions (20) +24 VDC Bullet/TPS/TLS Circuit Breaker/Fuse Load Positions 64
List DF: -48 VDC / +24 VDC Load Distribution Panel (26) -48 VDC Bullet/TPS/TLS Circuit Breaker/Fuse Load Positions (4) Positions Can Be Converted from -48 VDC to +24 VDC Positions in the Field 65
List FA: -48 VDC / -58 VDC Load Distribution Panel (22) -48 VDC Bullet/TPS/TLS Circuit Breaker/Fuse Load Positions (4) -58 VDC Bullet/TPS/TLS Circuit Breaker/Fuse Load Positions 66
List FB: -48 VDC / -58 VDC Load Distribution Panel (18) -48 VDC Bullet/TPS/TLS Circuit Breaker/Fuse Load Positions (8) -58 VDC Bullet/TPS/TLS Circuit Breaker/Fuse Load Positions 67
List FC: -48 VDC / -58 VDC Load Distribution Panel (14) -48 VDC Bullet/TPS/TLS Circuit Breaker/Fuse Load Positions (12) -58 VDC Bullet/TPS/TLS Circuit Breaker/Fuse Load Positions 68
List FD: -48 VDC / -58 VDC Load Distribution Panel (10) -48 VDC Bullet/TPS/TLS Circuit Breaker/Fuse Load Positions (16) -58 VDC Bullet/TPS/TLS Circuit Breaker/Fuse Load Positions 69
List FE: -48 VDC / -58 VDC Load Distribution Panel (6) -48 VDC Bullet/TPS/TLS Circuit Breaker/Fuse Load Positions (20) -58 VDC Bullet/TPS/TLS Circuit Breaker/Fuse Load Positions 70
List FF: -58 VDC Load Distribution Panel (26) -58 VDC Bullet/TPS/TLS Circuit Breaker/Fuse Load Positions 71
List GB: -58 VDC Load Distribution Panel (Bottom Row) (26) -58 VDC Bullet/TPS/TLS Circuit Breaker/Fuse Load Positions 72
Low Voltage Disconnect Options 73
List LB: Low Voltage Battery Disconnect (LVBD) 73
List LL: Low Voltage Load Disconnect (LVLD) 73

ACCESSORY DESCRIPTIONS 74
Relay Racks 74
Relay Rack Isolation Kit 74
Earthquake Kit, 19” Flush Mounting 75
P/N 559801 75
Special Mounting Bracket Kit 75
P/N 564300 75
19” to 23” Wide Relay Rack Mounting Bracket Kit 75
P/N 553630 75
Door Kits 76
19” Wide, 1-Row Cabinet Door Kit P/N 10010292 76
19” Wide, 2-Row Cabinet Door Kit P/N 10010293 76
23” Wide, 1-Row Cabinet Door Kit P/N 10010294 76
23” Wide, 2-Row Cabinet Door Kit P/N 10010295 76
Controller 77
NCU (NetSure Control Unit) Controller, P/N 1M830BNA 77
Optional NCU Controller 2nd Ethernet Port Kit, P/N 559741 78
Optional RS485 Modbus Interface Cable, P/N 564643 78
Optional Temperature Probes 79
Optional SM-Temp Temperature Concentrator, P/N 547490 80
SM-Temp Jumpers, P/N 552888 80
Alarm and Digital Input Cables 80
Critical Alarm Indicator Kit, P/N 555877 83

© 2026 Vertiv Group Corp. All Rights Reserved.

Rectifier Module....83
Rectifier Module, P/N 1R482000E3....83
Solar Converter Module....83
Solar Converter Module, P/N 1S482000E3....83
Converter Module....83
-48 VDC to +24 VDC Converter Module, P/N 1C48241500....83
-48 VDC to -58 VDC Converter Module, P/N 1C48582000P3....84
Inverter Module....84
Inverter Module, P/N 1I1201000....84
Optional **+27 VDC** Vertiv™ eSure™ Bullet Converter Kit, 60147273....84
Optional eSure™ Power Extend Converter....85
-48 VDC to -58 VDC Output Converter Upgrade Field Kit, P/N 60028039....85
-58V, Busbar, Row 1, Field Kit, P/N 60031300....86
Module Mounting Position Blank Cover Panel....86
Module Mounting Position Blank Cover Panel, P/N SXA 110 0035/1....86
Optional Transient Voltage Surge Suppressor (TVSS) Device, P/N 565281....86
DC Distribution Devices....87
Bullet Nose Type Circuit Breakers and Bullet Nose Type Fuseholders equipped with TPS/TLS Fuses....87
Bullet Nose Bypass Busbar, P/N 535015....89
Optional Bullet Nose Type 6-Position GMT Distribution Fuse Block, P/N 559737....90
Optional Bullet Nose Type 6-Position GMT Distribution Fuse Block, P/N 549017....91
Optional +27 VDC Bullet Nose 6-Position GMT Fuse Board Kit, P/N 10062803....92
GMT Type Load Distribution Fuses....93
GJ/218 Type Circuit Breakers for List 60....93
MCB Circuit Breakers for List 61....93
Standard Crimp Lugs, Special Application Crimp Lugs, and Busbar Adapter Kits and Hardware Kits....94
Standard Crimp Lugs....94
Special Application Crimp Lug / Strap Combination, Busbar Lug Adapters, and Hardware Kits....95
Rectifier AC Input / Solar Converter DC Input Cable Assemblies and Rectifier AC Input Line Cords....98
Rectifier AC Input / Solar Converter DC Input Cable Assembly, P/N 535232....98
Rectifier AC Input / Solar Converter DC Input Cable Assembly, P/N 547898....98
Rectifier AC Input / Solar Converter DC Input Cable Assembly, P/N 553202....98
Rectifier AC Input Line Cord, P/N 540946....99
Rectifier AC Input Line Cord, P/N 545252DCP....99
Rectifier AC Input Line Cord, P/N 545616DCP....99
Input Cord Bracket Kit (P/N 562050)....100
Input Cord Bracket Kit (P/N 563456)....100
User Replaceable Alarm, Reference, and Control Fuses....100
User Replaceable Components....101

RECOMMENDED WIRE SIZES, BRANCH CIRCUIT PROTECTION, CRIMP LUGS, AND WIRING ILLUSTRATIONS....102
Relay Rack / Equipment Cabinet Frame Grounding Requirements....102
Power System Shelf Frame Grounding Requirements....102
Central Office Grounding Connection....103
Rectifier AC Input Connections....104
To 19” Rectifier AC Input / Solar Converter DC Input Panel (List 40)....104
To 23” Rectifier AC Input / Solar Converter DC Input Panel (List 45)....106
To 23” Rectifier AC Input Panel (List 46)....108
To 588705300 Module Shelves Equipped with Molex Connectors and Provided with Rectifier AC Input Cable Assemblies or Rectifier AC Input Line Cords....110
Solar Converter DC Input Connections....111
To 19” Rectifier AC Input / Solar Converter DC Input Panel (List 40)....111
To 23” Rectifier AC Input / Solar Converter DC Input Panel (List 45)....113
To Solar Connection Cabinet (List 61)....115
Optional Inverter System AC Input Connections (List 50, 51, 52, 53, 54, 55, 56, 57)....117
Inverter System AC Input Connections....117
Optional Inverter System AC Output Connections (List 50, 51, 52, 53, 54, 55, 56, 57)....119
Inverter System AC Output Connections (List 50, 52, 54, 56)....119
Inverter System AC Output Connections (List 51, 53, 55, 57)....122
External Alarm, Reference, Monitoring, and Control Connections....123
General....123

© 2026 Vertiv Group Corp. All Rights Reserved.

582137100 List 20, List 25 Distribution Cabinet....123
582137100 List 21, List 26 Distribution Cabinet....123
582137100 List 27 Distribution Cabinet....123
IB2 (Controller Interface Board)....123
Optional EIB (Controller Extended Interface Board)....123
System Interface Board....123
NCU Controller Ethernet Connection (if required)....130
To NCU Front Panel....130
To IB5 Board (if furnished)....130
Load Distribution Connections....131
General....131
582137100 List 20, List 25 Distribution Cabinet....131
582137100 List 21, List 26 Distribution Cabinet....131
582137100 List 27 Distribution Cabinet....131
GMT Fuse Block....131
Load Distribution Wiring (List KG)....131
Optional Transient Voltage Surge Suppressor (TVSS) Device Ground Connection....141
DC Breaker Wiring to Hybrid Connection Cabinet (List 60)....145
Input Battery Connections....147
582137100 List 20, List 25 Distribution Cabinet....147
582137100 List 21, List 26 Distribution Cabinet....150
582137100 List 27 Distribution Cabinet....153
Remote Distribution Unit (DU) Connections....153
582137100 List 27 Distribution Cabinet....153

SPECIFICATIONS....155
1. System....155
1.1 DC Output Ratings....155
1.2 Rectifier AC Input Ratings....155
1.3 Solar Converter DC Input Ratings....155
1.4 Environmental Ratings....155
1.5 Compliance Information Safety Compliance:....156
1.6 IB2 and EIB (Controller Interface Board) Ratings....156
2. Module Mounting Assembly....156
3. Optional Inverter System....156
3.1 AC Input and DC Input Ratings....156
3.2 AC Output Ratings....156
4. Rectifier....156
5. Solar Converter....156
6. -48 VDC to +24 VDC Converter....156
7. -48 VDC to -58 VDC Converter....156
8. Inverter....157
9. Controller....157

MECHANICAL SPECIFICATIONS....158
Overall Dimensions....158
List 20 Distribution Cabinet....158
List 21 Distribution Cabinet....159
List 25 Distribution Cabinet....160
List 26 Distribution Cabinet....161
List 27 Distribution Cabinet....162
List 40 Rectifier AC Input / Solar Converter DC Input Panel....163
List 45 Rectifier AC Input / Solar Converter DC Input Panel....164
List 46 Rectifier AC Input Panel....165
List 50 Inverter System....166
List 51 Inverter System....166
List 52 Inverter System....167
List 53 Inverter System....167
List 54 Inverter System....168
List 55 Inverter System....168
List 56 Inverter System....169

© 2026 Vertiv Group Corp. All Rights Reserved.

List 57 Inverter System....169
List 60 Hybrid Connection Cabinet....170
List 61 Solar Connection Cabinet....171
List KG GMT Fuse Distribution Panel....172
List 93 (23" Wide Battery Tray)....173
List 94 (19" Wide Battery Tray)....174
Weights....175

BATTERY MANUFACTURER INFORMATION....178

RELATED DOCUMENTATION....178

© 2026 Vertiv Group Corp. All Rights Reserved.

MAIN COMPONENTS ILLUSTRATIONS

Typical System with a 19" 1-Row Distribution Cabinet (List 20)

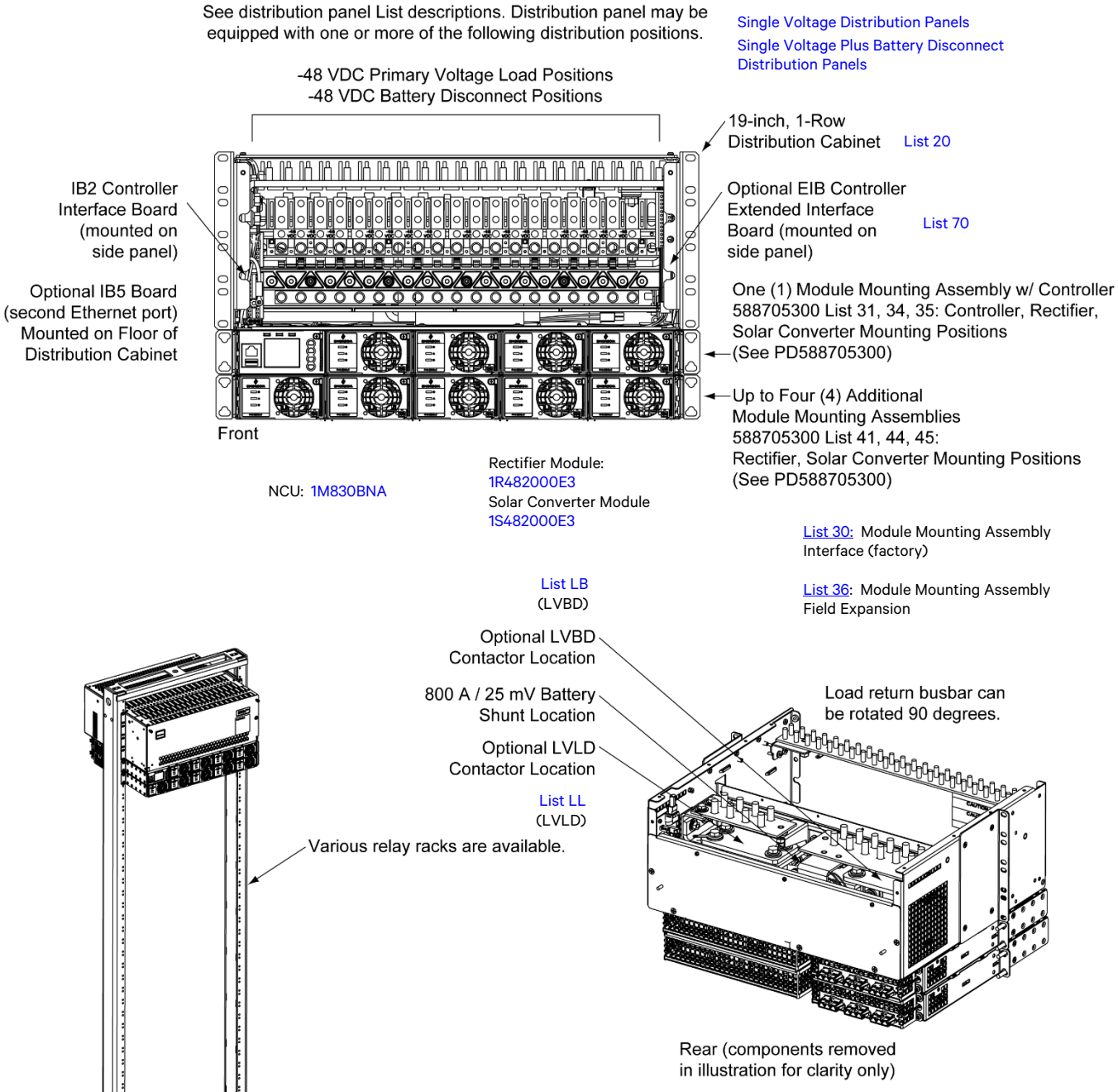

© 2026 Vertiv Group Corp. All Rights Reserved.

Typical System with a 19” 2-Row Distribution Cabinet (List 21)

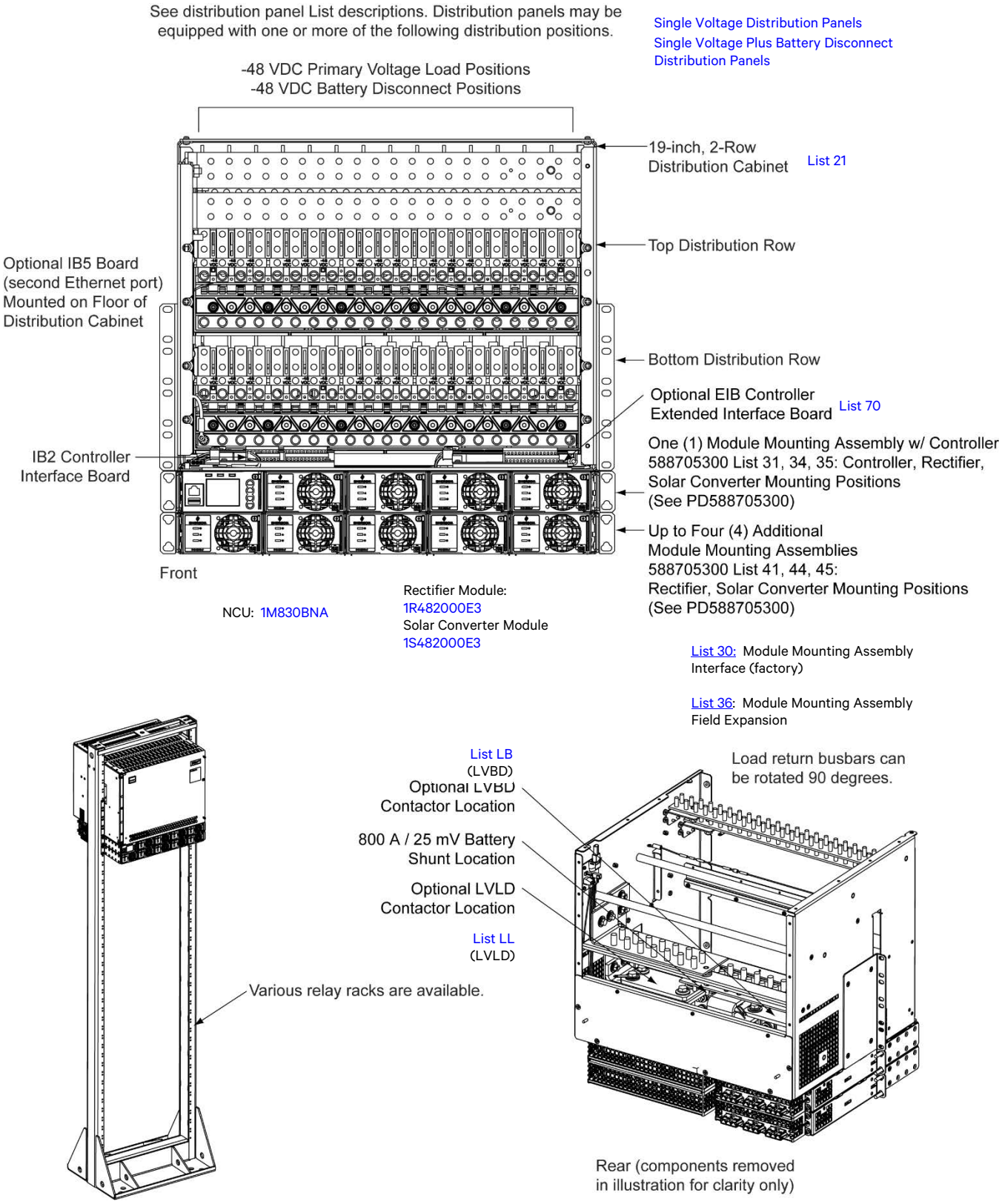

© 2026 Vertiv Group Corp. All Rights Reserved.

Typical System with a 23" 1-Row Distribution Cabinet (List 25)

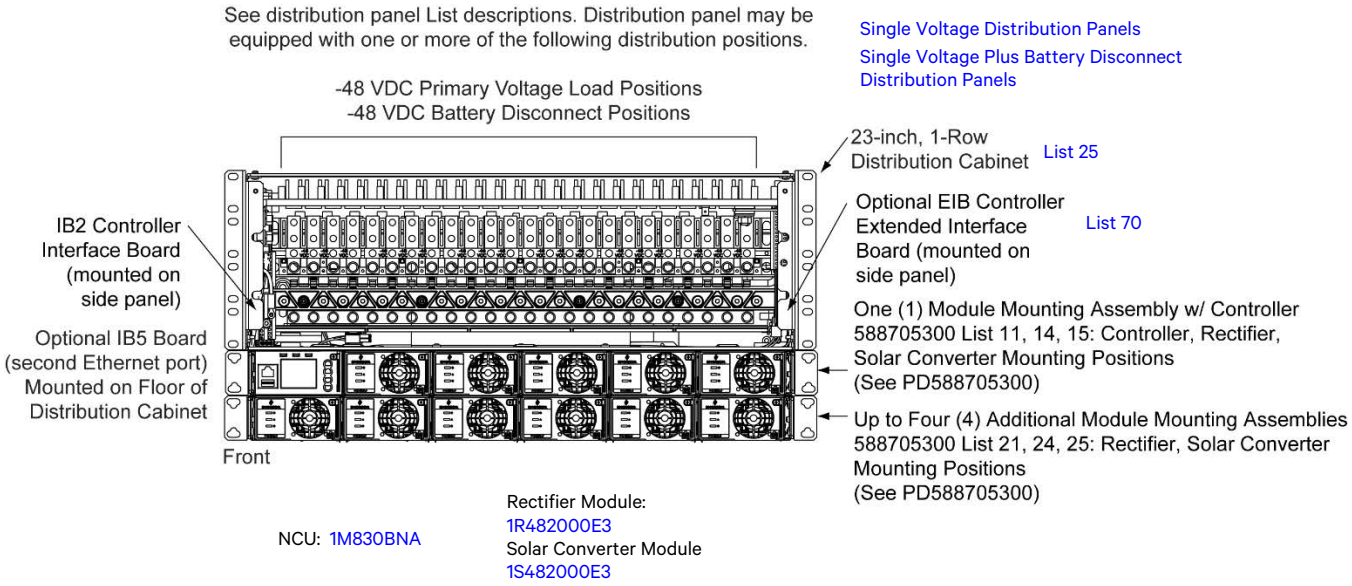

List 30: Module Mounting Assembly Interface (factory)

List 34: Module Mounting Assembly Field Expansion

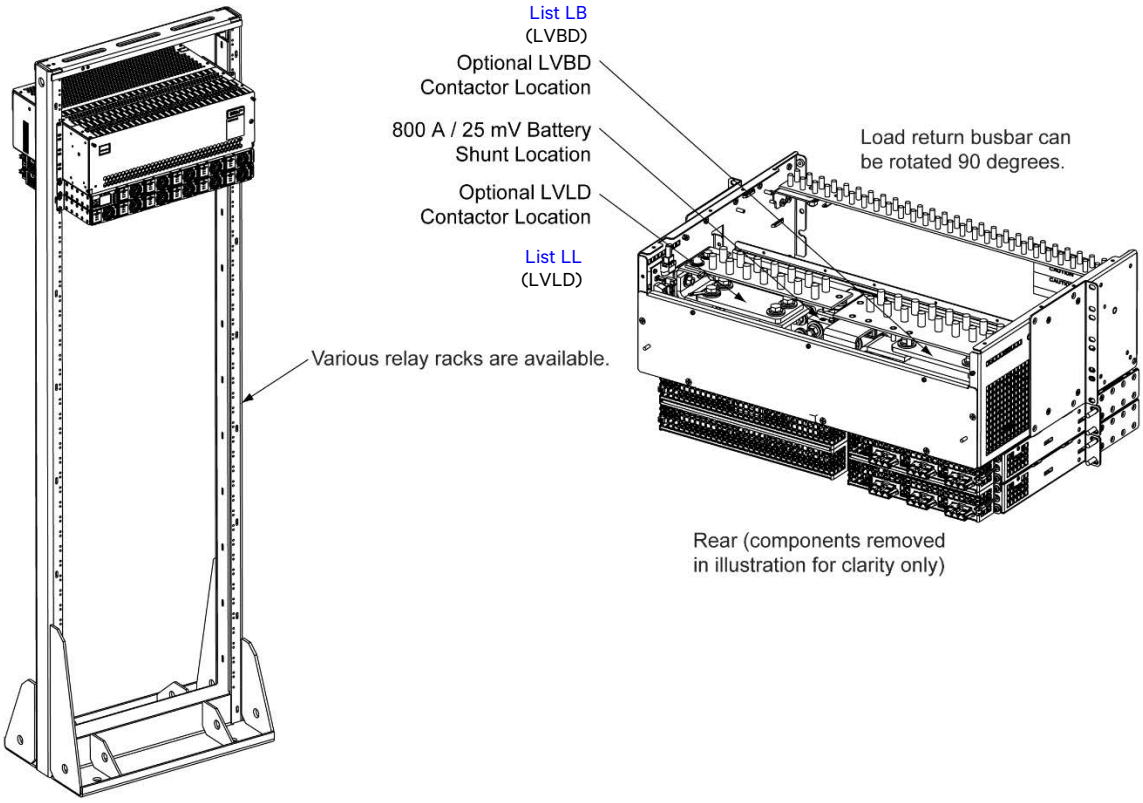

© 2026 Vertiv Group Corp. All Rights Reserved.

Typical System with a 23” 2-Row Distribution Cabinet (List 26)

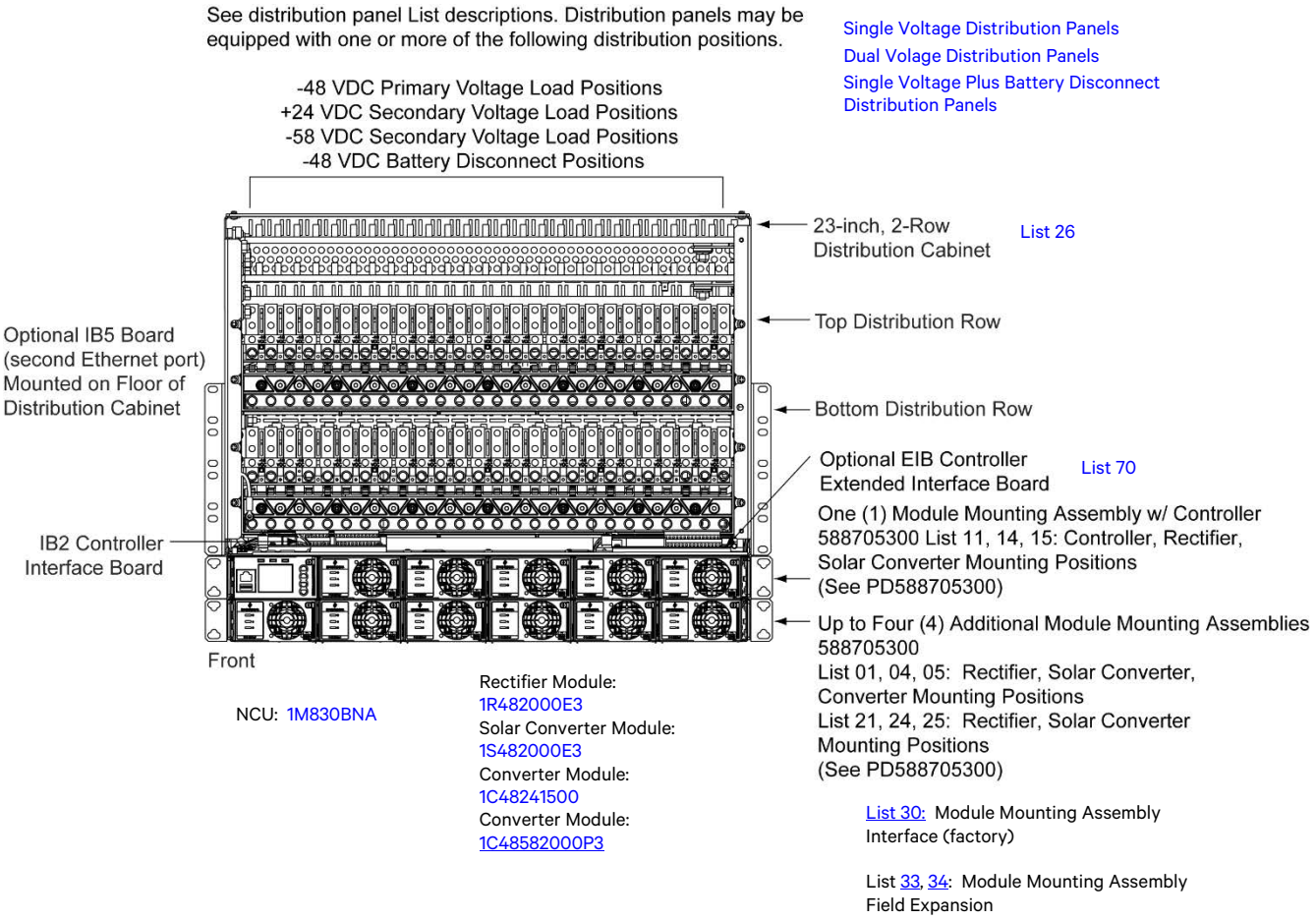

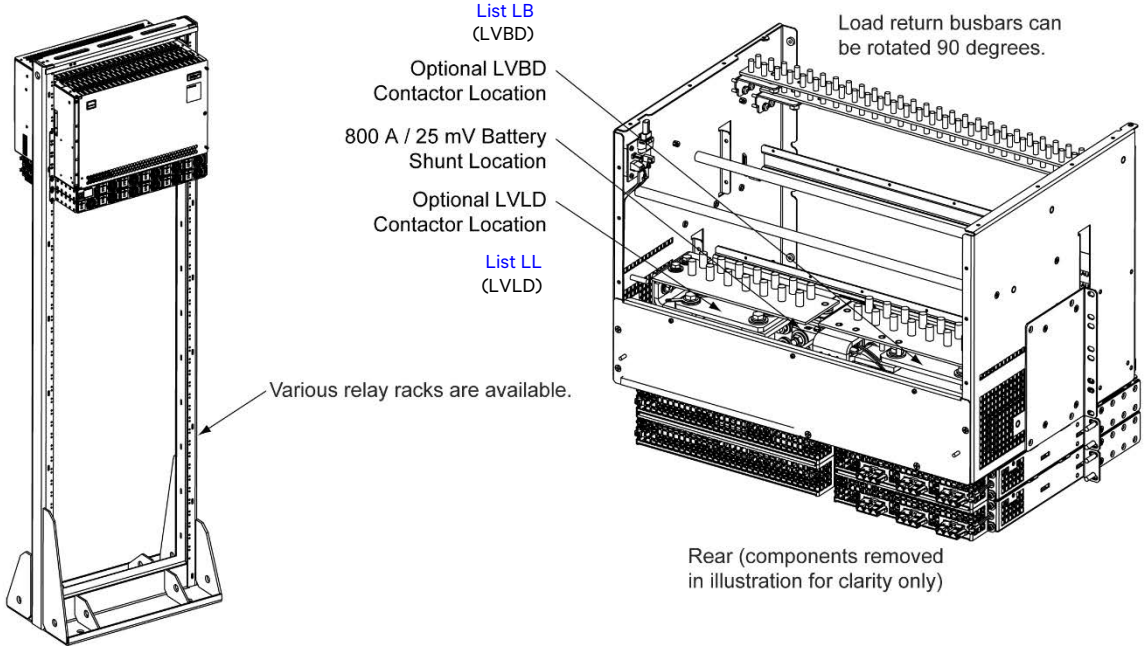

© 2026 Vertiv Group Corp. All Rights Reserved.

Typical System with a 23" 1-Row Distribution Cabinet (List 27)

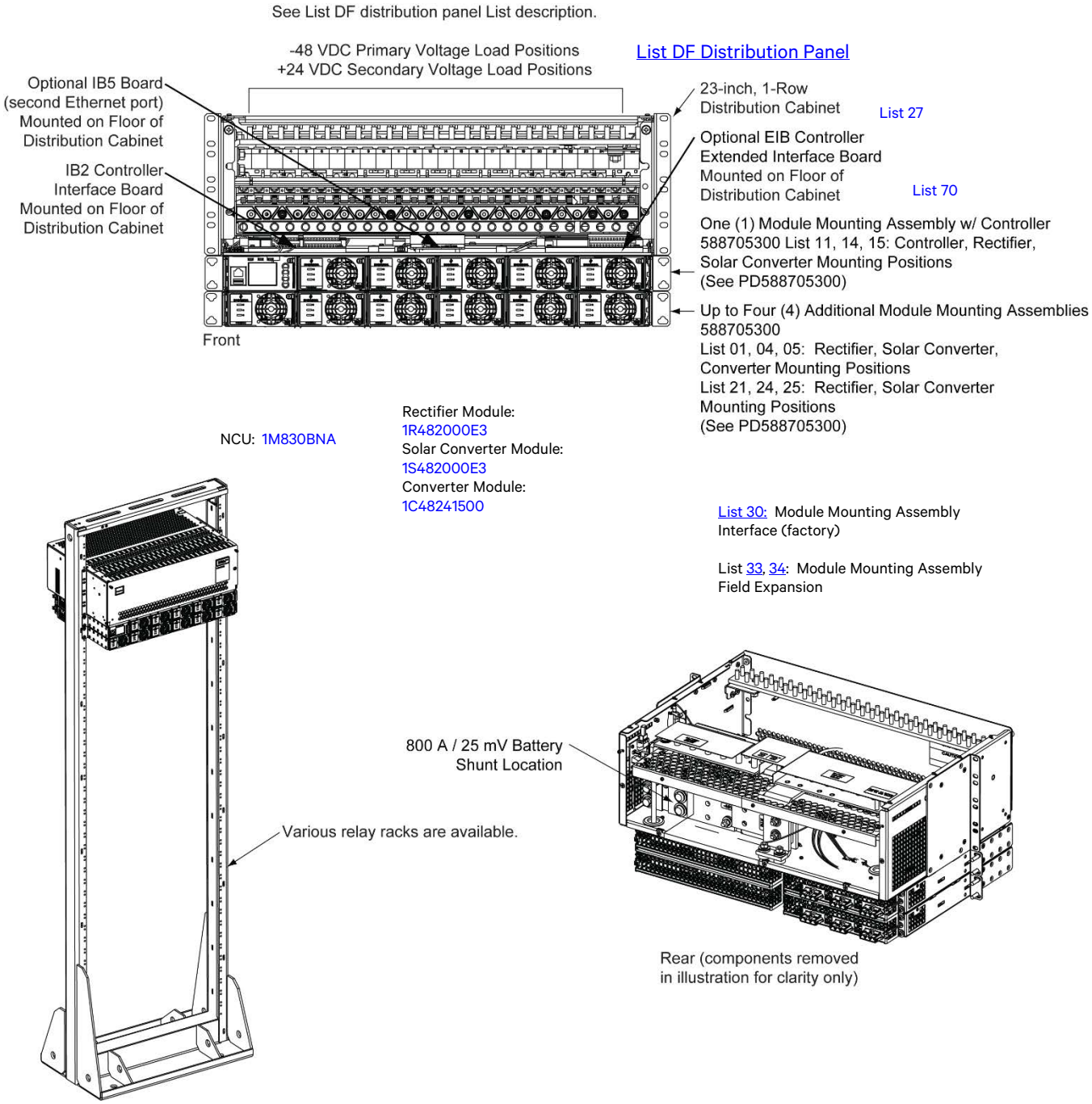

© 2026 Vertiv Group Corp. All Rights Reserved.

Typical Configured System with a 23” 1-Row or 2-Row Distribution Cabinet and Equipped with Solar Converter and Hybrid Connection Cabinets

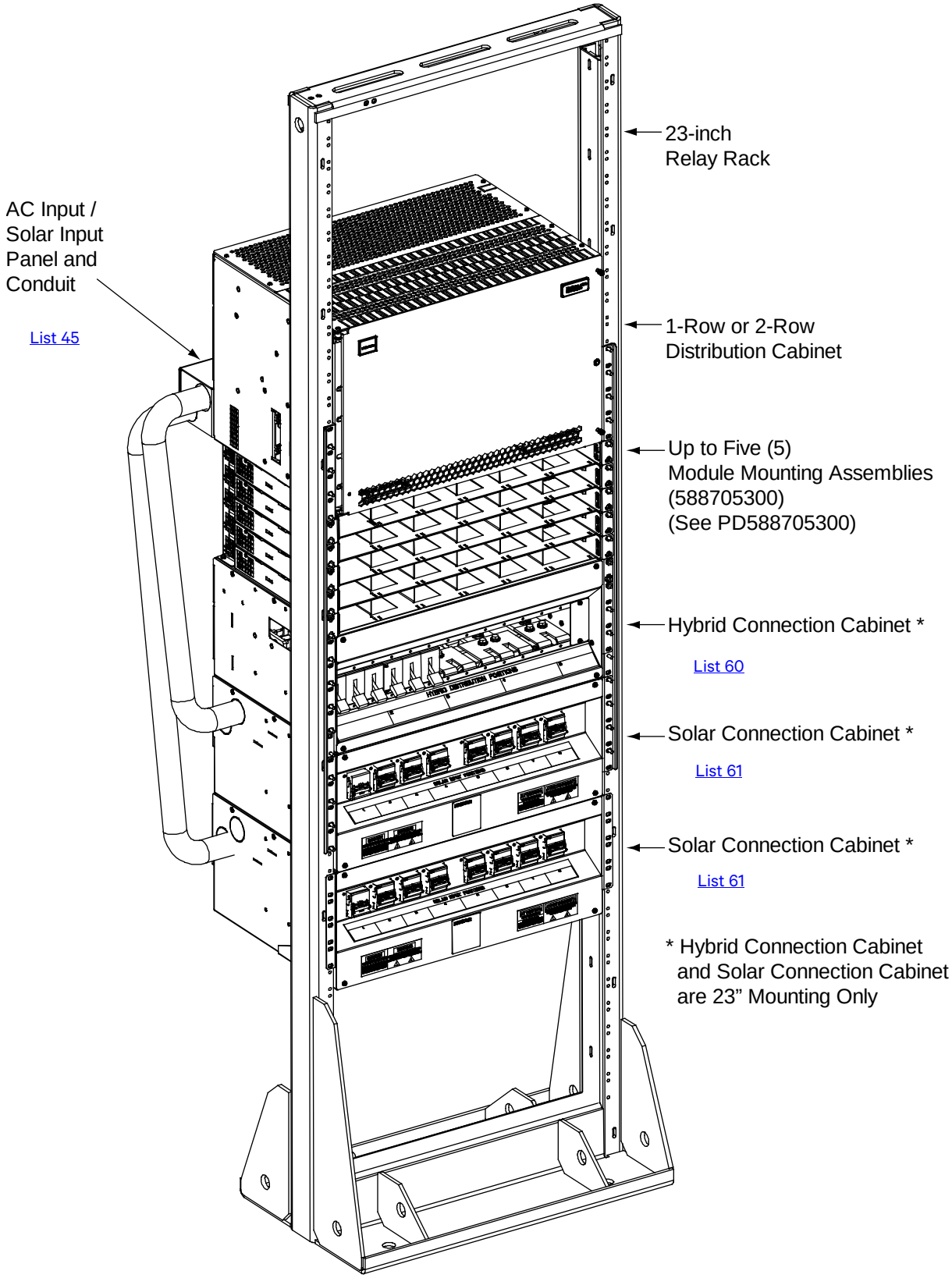

© 2026 Vertiv Group Corp. All Rights Reserved.

Optional Inverter System

List 50, 51, 52, 53

List 52 and List 53 Shown.
Other Configurations Similar.

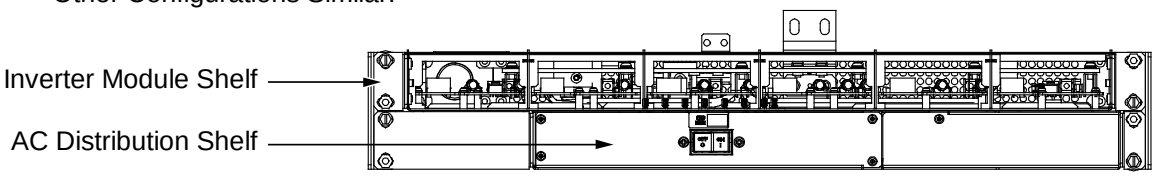

582137100 List 52 Front View

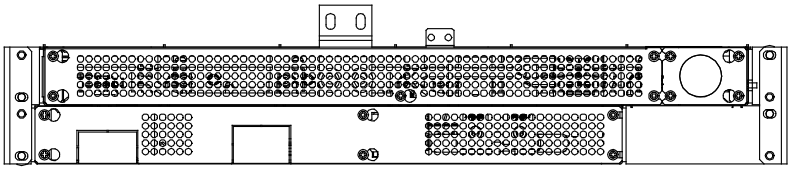

582137100 List 52 Rear View

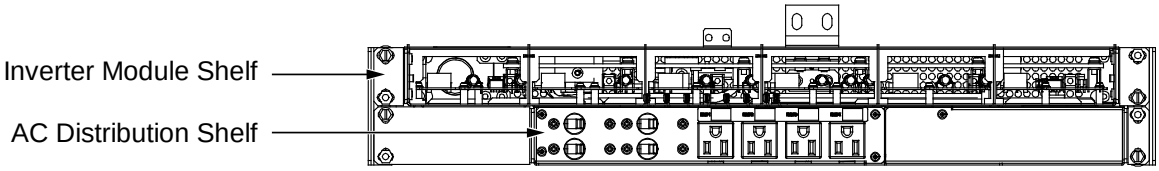

582137100 List 53 Front View

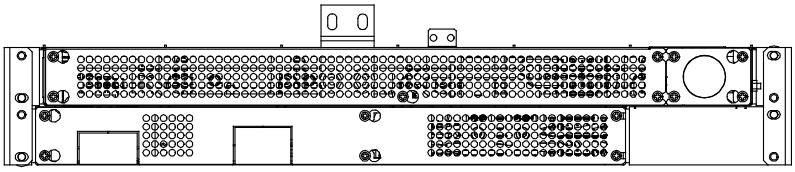

582137100 List 53 Rear View

© 2026 Vertiv Group Corp. All Rights Reserved.

List 54, 55, 56, 57

List 56 and List 57 Shown.
Other Configurations Similar.

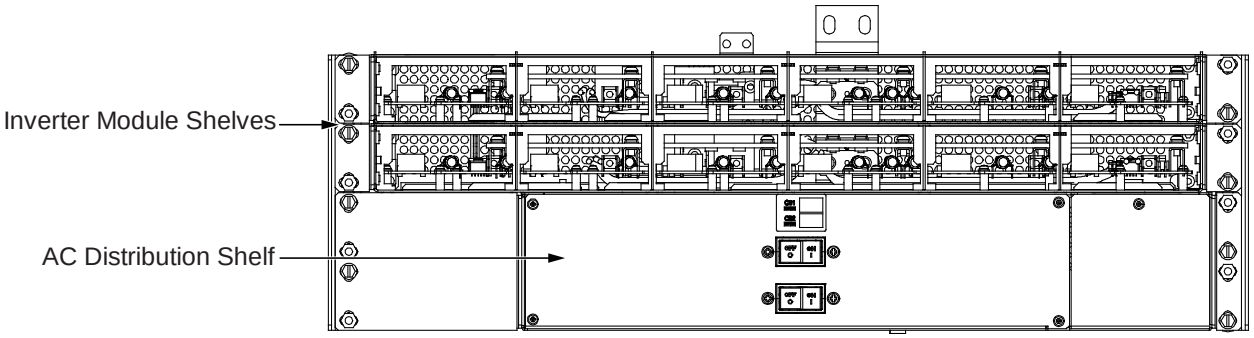

582137100 List 56 Front View

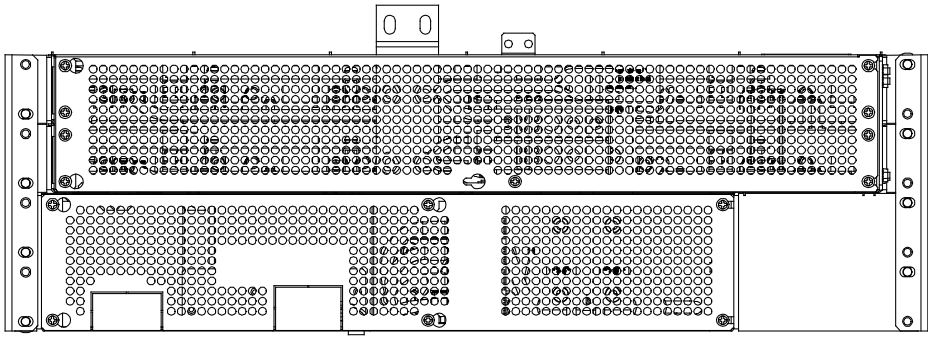

582137100 List 56 Rear View

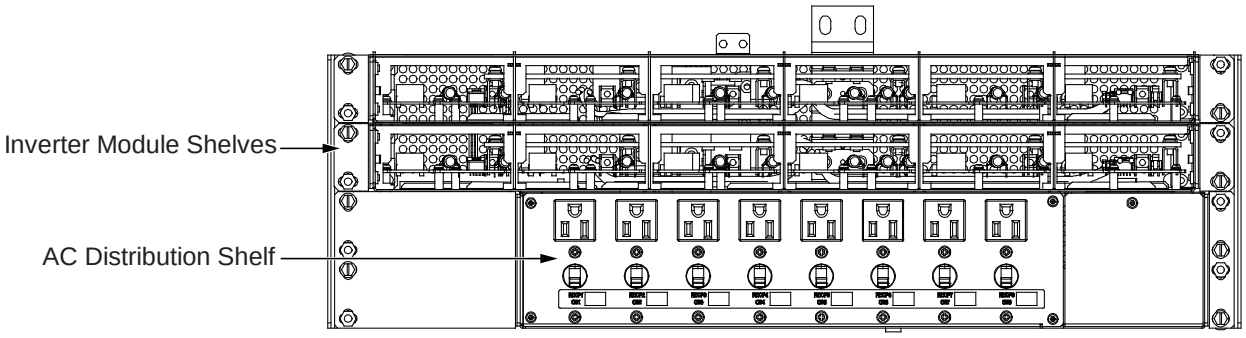

582137100 List 57 Front View

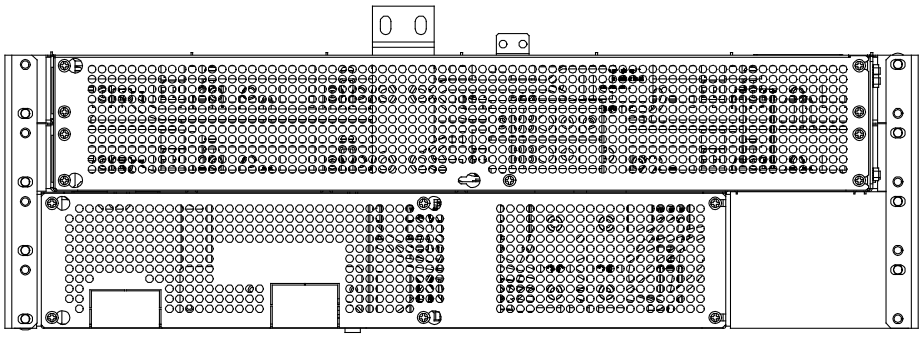

582137100 List 57 Rear View

© 2026 Vertiv Group Corp. All Rights Reserved.

LIST DESCRIPTIONS

List Numbers

List 20: 1-Row Distribution Cabinet for 19-Inch Relay Rack Mounting

Features

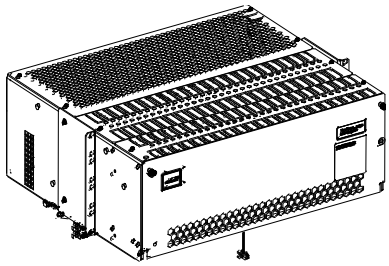

- 4RU high by 19” wide distribution cabinet.
- Accepts one (1) distribution panel.
- Includes the IB2 controller interface board.
  The IB2 provides eight (8) programmable form C- relay outputs, eight (8) programmable binary inputs, and two (2) temperature inputs.
- Accepts the EIB controller extended interface board.
- Accepts the IB5 (second Ethernet port) board.

Restrictions

Rated -48 VDC; 400 A @ 40 °C, 300 A @ 65 °C.

Ordering Notes

1) Order List 20 and the following for a configured system.
2) Order one (1) distribution panel to be mounted in the cabinet (see the distribution panel List descriptions starting on page 49).
3) For mounting in a data cabinet, order a mounting kit as required (see page 75).
4) Order the optional EIB controller extended interface board as required per List 70 (see page 39).
5) Order the optional IB5 (second Ethernet port) board kit P/N 559741 as required (see page 78).
6) Order temperature probes as required (see page 79).
7) Order alarm cables as required (see page 80).
8) Order RS485 Modbus interface cable as required (see page 78).
9) Order optional Transient Voltage Surge Suppressor (TVSS) Device(s) as required (see page 86).
10) Order fuses and/or circuit breakers as required per “Distribution Devices” starting on page 87.
11) Order one (1) List KG GMT distribution fuse panel per system as required (see page 53).
    Order GMT fuses as required per Table 16.
12) Order 6-position GMT fuse block P/N 559737 (see page 90) as required.
    Order GMT fuses as required per Table 16.
13) Order battery and load distribution lugs, lug adapters, and lug hardware kits as required per “Standard Crimp Lugs, Special Application Crimp Lugs, and Busbar Adapter Kits and Hardware Kits” starting on page 94.
14) Order List LB low voltage battery disconnect (LVBD) and/or List LL low voltage load disconnect (LVLD) as required per “Low Voltage Disconnect Options” on page 66.
15) Order one (1) to five (5) module mounting assembly(s) P/N 588705300 per PD588705300.
    a) Order the appropriate rail mounting kit and output busbar kit per List 30 (see page 25).
    b) Order NCU controller P/N 1M830BNA (see page 77).
    c) Order critical alarm indicator kit P/N 555877 as required (see page 83).
    d) Order rectifier modules P/N 1R482000E3 as required (see page 83).
    e) Order solar converter modules P/N 1S482000E3 as required (see page 83).
    f) Order a blank module mounting position cover P/N SXA 110 0035/1 for each unused mounting position in the system as required (see page 86).
16) Order a Rectifier AC Input / Solar Converter DC Input Panel as required per List 40 (see page 29).
17) If List 40 not ordered, order “Rectifier AC Input / Solar Converter DC Input Cable Assemblies and Rectifier AC Input Line Cords” as required (see page 98). Order “Input Cord Bracket Kit (P/N 562050)” as required (see page 100).
18) If the system is mounted in a relay rack, order a 19" W Inverter System as required per List 50, 51, 54, 55 (see page 32).
19) Order a battery tray(s) as required per List 94 (see page 44).
20) Order a relay rack (see page 74).
21) Order Relay Rack Isolation Kit as required and as applicable. See “Relay Rack Isolation Kit” on page 74.

© 2026 Vertiv Group Corp. All Rights Reserved.

List 21: 2-Row Distribution Cabinet for 19-Inch Relay Rack Mounting

Features

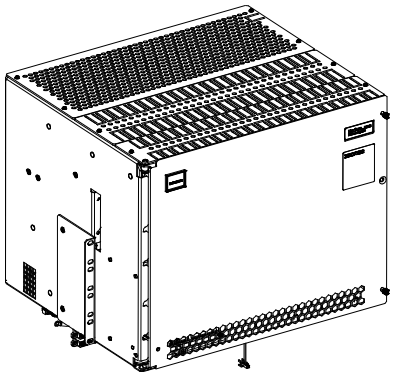

- 8RU high by 19” wide distribution cabinet.
- Accepts two (2) distribution panels.
- Includes the IB2 controller interface board.
  The IB2 provides eight (8) programmable form C- relay outputs, eight (8) programmable binary inputs, and two (2) temperature inputs.
- Accepts the EIB controller extended interface board.
- Accepts the IB5 (second Ethernet port) board.

Restrictions

Rated -48 VDC; 600 A (400 A maximum per row) @ 40 °C, 400 A (300 A maximum per row) @ 65 °C.

Ordering Notes

1) Order List 21 and the following for a configured system.
2) Order two (2) distribution panels to be mounted in the cabinet (see the distribution panel List descriptions starting on page 49).
3) For mounting in a data cabinet, order a mounting kit as required (see page 75).
4) Order the optional EIB controller extended interface board as required per List 70 (see page 39).
5) Order the optional IB5 (second Ethernet port) board kit P/N 559741 as required (see page 78).
6) Order temperature probes as required (see page 79).
7) Order alarm cables as required (see page 80).
8) Order RS485 Modbus interface cable as required (see page 78).
9) Order optional Transient Voltage Surge Suppressor (TVSS) Device(s) as required (see page 86).
10) Order fuses and/or circuit breakers as required per “Distribution Devices” starting on page 87.
11) Order one (1) List KG GMT distribution fuse panel per system as required (see page 53).
    Order GMT fuses as required per Table 16.
12) Order 6-position GMT fuse block P/N 559737 for the top row (see page 90) as required.
    Order 6-position GMT fuse block PN 549017 for the bottom row (see page 91) as required.
    Order GMT fuses as required per Table 16.
13) Order battery and load distribution lugs, lug adapters, and lug hardware kits as required per “Standard Crimp Lugs, Special Application Crimp Lugs, and Busbar Adapter Kits and Hardware Kits” starting on page 94.
14) Order List LB low voltage battery disconnect (LVBD) and/or List LL low voltage load disconnect (LVLD) as required per “Low Voltage Disconnect Options” on page 66.
15) Order one (1) to five (5) module mounting assembly(s) P/N 588705300 per PD588705300.
    a) Order the appropriate rail mounting kit and output busbar kit per List 30 (see page 25).
    b) Order NCU controller P/N 1M830BNA (see page 77).
    c) Order critical alarm indicator kit P/N 555877 as required (see page 83).
    d) Order rectifier modules P/N 1R482000E3 as required (see page 83).
    e) Order solar converter modules P/N 1S482000E3 as required (see page 83).
    f) Order a blank module mounting position cover P/N SXA 110 0035/1 for each unused mounting position in the system as required (see page 86).
16) Order a Rectifier AC Input / Solar Converter DC Input Panel as required per List 40 (see page 29).
17) If List 40 not ordered, order “Rectifier AC Input / Solar Converter DC Input Cable Assemblies and Rectifier AC Input Line Cords” as required (see page 98). Order “Input Cord Bracket Kit (P/N 562050)” as required (see page 100).
18) If the system is mounted in a relay rack, order a 19" W Inverter System as required per List 50, 51, 54, 55 (see page 32).
19) Order a battery tray(s) as required per List 94 (see page 44).
20) Order a relay rack (see page 74).
21) Order Relay Rack Isolation Kit as required and as applicable. See “Relay Rack Isolation Kit” on page 74.

© 2026 Vertiv Group Corp. All Rights Reserved.

List 25: 1-Row Distribution Cabinet for 23-Inch Relay Rack Mounting

Features

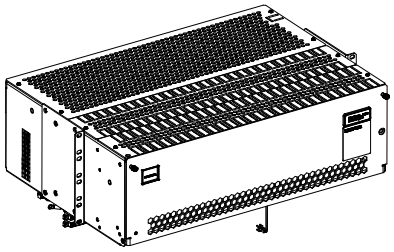

- 4RU high by 23” wide distribution cabinet.
- Accepts one (1) distribution panel.
- Includes the IB2 controller interface board.
  The IB2 provides eight (8) programmable form C- relay outputs, eight (8) programmable binary inputs, and two (2) temperature inputs.
- Accepts the EIB controller extended interface board.
- Accepts the IB5 (second Ethernet port) board.

Restrictions

Rated -48 VDC; 400 A @ 40 °C, 300 A @ 65 °C.

Ordering Notes

1) Order List 25 and the following for a configured system.
2) Order one (1) distribution panel to be mounted in the cabinet (see the distribution panel List descriptions starting on page 49).
3) For mounting in a data cabinet, order a mounting kit as required (see page 75).
4) Order the optional EIB controller extended interface board as required per List 70 (see page 39).
5) Order the optional IB5 (second Ethernet port) board kit P/N 559741 as required (see page 78).
6) Order temperature probes as required (see page 79).
7) Order alarm cables as required (see page 80).
8) Order RS485 Modbus interface cable as required (see page 78).
9) Order optional Transient Voltage Surge Suppressor (TVSS) Device(s) as required (see page 86).
10) Order fuses and/or circuit breakers as required per “Distribution Devices” starting on page 87.
11) Order one (1) List KG GMT distribution fuse panel per system as required (see page 53).
    Order GMT fuses as required per Table 16.
12) Order 6-position GMT fuse block P/N 559737 (see page 90) as required.
    Order GMT fuses as required per Table 16.
13) Order battery and load distribution lugs, lug adapters, and lug hardware kits as required per “Standard Crimp Lugs, Special Application Crimp Lugs, and Busbar Adapter Kits and Hardware Kits” starting on page 94.
14) Order List LB low voltage battery disconnect (LVBD) and/or List LL low voltage load disconnect (LVLD) as required per “Low Voltage Disconnect Options” on page 66.
15) Order one (1) to five (5) module mounting assembly(s) P/N 588705300 per PD588705300.
    a) Order the appropriate rail mounting kit and output busbar kit per List 30 (see page 25).
    b) Order NCU controller P/N 1M830BNA (see page 77).
    c) Order critical alarm indicator kit P/N 555877 as required (see page 83).
    d) Order rectifier modules P/N 1R482000E3 as required (see page 83).
    e) Order solar converter modules P/N 1S482000E3 as required (see page 83).
    f) Order a blank module mounting position cover P/N SXA 110 0035/1 for each unused mounting position in the system as required (see page 86).
16) Order a Rectifier AC Input / Solar Converter DC Input Panel as required per List 45 (see page 30) or Rectifier AC Input Panel as required per List 46 (see page 31). See restrictions under List 46 on page 31.
17) If List 45 or List 46 not ordered, order “Rectifier AC Input / Solar Converter DC Input Cable Assemblies and Rectifier AC Input Line Cords” as required (see page 98). Order “Input Cord Bracket Kit (P/N 563456) as required (see page 100).
18) If the system is mounted in a relay rack, order a 23" W Inverter System as required per List 52, 53, 56, 57 (see page 33).
19) Order a Hybrid Connection Cabinet as required per List 60 (see page 36).
20) Order a Solar Connection Cabinet as required per List 61 (see page 38).
21) Order a battery tray(s) as required per List 93 (see page 39).
22) Order a relay rack (see page 74).
23) Order Relay Rack Isolation Kit as required and as applicable. See “Relay Rack Isolation Kit” on page 74.

© 2026 Vertiv Group Corp. All Rights Reserved.

List 26: 2-Row Distribution Cabinet for 23-Inch Relay Rack Mounting

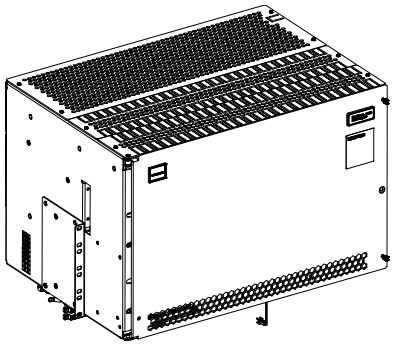

Features

- 8RU high by 23" wide distribution cabinet.
- Accepts two (2) distribution panels.
- Includes the IB2 controller interface board.
  The IB2 provides eight (8) programmable form C- relay outputs, eight (8) programmable binary inputs, and two (2) temperature inputs.
- Accepts the EIB controller extended interface board.
- Accepts the IB5 (second Ethernet port) board.

Restrictions

Rated -48 VDC; 600 A (400 A maximum per row) and +24 VDC; 400 A or -58 VDC (max.); 340 A (max.) @ 40 °C.

Rated -48 VDC; 400 A (300 A maximum per row) and +24 VDC; 300 A or -58 VDC (max.); 270 A (max.) @ 65 °C.

Ordering Notes

1) Order List 26 and the following for a configured system.
2) Order two (2) distribution panels to be mounted in the cabinet (see the distribution panel List descriptions starting on page 49). A minimum of two (2) panels is required.
3) For mounting in a data cabinet, order a mounting kit as required (see page 75).
4) Order the optional EIB controller extended interface board as required per List 70 (see page 39).
5) Order the optional IB5 (second Ethernet port) board kit P/N 559741 as required (see page 78).
6) Order temperature probes as required (see page 79).
7) Order alarm cables as required (see page 80).
8) Order RS485 Modbus interface cable as required (see page 78).
9) Order optional Transient Voltage Surge Suppressor (TVSS) Device(s) as required (see page 86).
10) Order fuses and/or circuit breakers as required per "Distribution Devices" starting on page 87.
11) Order one (1) List KG GMT distribution fuse panel per system as required (see page 53).
    Order GMT fuses as required per Table 16.
12) Order 6-position GMT fuse block P/N 559737 for the top row (see page 90) as required.
    Order 6-position GMT fuse block PN 549017 for the bottom row (see page 91) as required.
    Order GMT fuses as required per Table 16.
13) Order battery and load distribution lugs, lug adapters, and lug hardware kits as required per "Standard Crimp Lugs, Special Application Crimp Lugs, and Busbar Adapter Kits and Hardware Kits" starting on page 94.
14) Order List LB low voltage battery disconnect (LVBD) and/or List LL low voltage load disconnect (LVLD) as required per "Low Voltage Disconnect Options" on page 66.
15) Order one (1) to five (5) module mounting assembly(s) P/N 588705300 per PD588705300.
    a) Order the appropriate rail mounting kit and output busbar kit per List 30 (see page 25).
    b) Order NCU controller P/N 1M830BNA (see page 77).
    c) Order critical alarm indicator kit P/N 555877 as required (see page 83).
    d) Order rectifier modules P/N 1R482000E3 as required (see page 83).
    e) Order solar converter modules P/N 1S482000E3 as required (see page 83).
    f) Order -48 VDC to +24 VDC converter modules P/N 1C48241500 as required (see page 83).
    g) Order -48 VDC to -58 VDC converter modules P/N 1C48582000P3 as required (see page 84).
    h) Order a blank module mounting position cover P/N SXA 110 0035/1 for each unused mounting position in the system as required (see page 86).
16) Order a Rectifier AC Input / Solar Converter DC Input Panel as required per List 45 (see page 30) or Rectifier AC Input Panel as required per List 46 (see page 31). See restrictions under List 46 on page 31.
17) If List 45 or List 46 not ordered, order "Rectifier AC Input / Solar Converter DC Input Cable Assemblies and Rectifier AC Input Line Cords" as required (see page 98). Order "Input Cord Bracket Kit (P/N 563456) as required (see page 100).
18) If the system is mounted in a relay rack, order a 23" W Inverter System as required per List 52, 53, 56, 57 (see page 33).
19) Order a Hybrid Connection Cabinet as required per List 60 (see page 36).
20) Order a Solar Connection Cabinet as required per List 61 (see page 38).
21) Order a battery tray(s) as required per List 93 (see page 39).

© 2026 Vertiv Group Corp. All Rights Reserved.

22) Order a relay rack (see page 74).
23) Order Relay Rack Isolation Kit as required and as applicable. See "Relay Rack Isolation Kit" on page 74.

List 27: 1-Row Distribution Cabinet for 23-Inch Relay Rack Mounting

Features

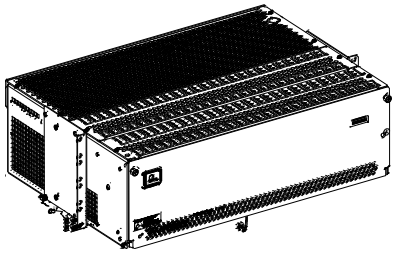

- 4RU high by 23" wide distribution cabinet.
- Accepts one (1) List DF distribution panel.
- Includes the IB2 controller interface board.
  The IB2 provides eight (8) programmable form C- relay outputs, eight (8) programmable binary inputs, and two (2) temperature inputs.
- Accepts the EIB controller extended interface board.
- Accepts the IB5 (second Ethernet port) board.

Restrictions

Charge Ratings:
-48 VDC; 600 A and +24 VDC; 63 A; -48 VDC Battery Re-Charge; 195 A at 40 °C.
-48 VDC; 525 A and +24 VDC; 50 A; -48 VDC Battery Re-Charge; 120 A at 65 °C.
Discharge Ratings:
-48 VDC; 771 A at 40 °C.
-48 VDC; 600 A at 65 °C.

Bulk Output Rating:
-48 VDC; 300 A @ 40 °C and 65 °C. The Bulk Output current value used in the end use application is to be subtracted from the available current of the -48 VDC charge ratings.

List 27 cannot be ordered with Lists LL or List LB.

List 27 is only for use with List DF.

No LVD.

Cannot be used with the inverter system (List 50-List 57).

Ordering Notes

1) Order List 27 and the following for a configured system.
2) Order one (1) List DF distribution panel to be mounted in the cabinet (see the distribution panel List description on page 65).
3) For mounting in a data cabinet, order a mounting kit as required (see page 75).
4) Order the optional EIB controller extended interface board as required per List 70 (see page 39).
5) Order the optional IB5 (second Ethernet port) board kit P/N 559741 as required (see page 78).
6) Order temperature probes as required (see page 79).
7) Order alarm cables as required (see page 80).
8) Order RS485 Modbus interface cable as required (see page 78).
9) Order optional Transient Voltage Surge Suppressor (TVSS) Device(s) as required (see page 86).
10) Order fuses and/or circuit breakers as required per "Distribution Devices" starting on page 87.
11) Order one (1) List KG GMT distribution fuse panel per system as required (see page 53).
    Order GMT fuses as required per Table 16.
12) Order 6-position GMT fuse block P/N 559737 (see page 90) as required.
    Order GMT fuses as required per Table 16.
13) Order battery and load distribution lugs, lug adapters, and lug hardware kits as required per "Standard Crimp Lugs, Special Application Crimp Lugs, and Busbar Adapter Kits and Hardware Kits" starting on page 94.
14) Order one (1) to five (5) module mounting assembly(s) P/N 588705300 per PD588705300.
    a) Order the appropriate rail mounting kit and output busbar kit per List 30 (see page 25).
    b) Order NCU controller P/N 1M830BNA (see page 77).
    c) Order critical alarm indicator kit P/N 555877 as required (see page 83).
    d) Order rectifier modules P/N 1R482000E3 as required (see page 83).
    e) Order solar converter modules P/N 1S482000E3 as required (see page 83).

© 2026 Vertiv Group Corp. All Rights Reserved.

f) Order -48 VDC to +24 VDC converter modules P/N 1C48241500 as required (see page 83).

g) Order a blank module mounting position cover P/N SXA 110 0035/1 for each unused mounting position in the system as required (see page 86).

15) Order a Rectifier AC Input / Solar Converter DC Input Panel as required per List 45 (see page 30) or Rectifier AC Input Panel as required per List 46 (see page 31). See restrictions under List 46 on page 31.

16) If List 45 or List 46 not ordered, order "Rectifier AC Input / Solar Converter DC Input Cable Assemblies and Rectifier AC Input Line Cords" as required (see page 98). Order "Input Cord Bracket Kit (P/N 563456) as required (see page 100).

17) Order a Hybrid Connection Cabinet as required per List 60 (see page 36).

18) Order a Solar Connection Cabinet as required per List 61 (see page 38).

19) Order a battery tray(s) as required per List 93 (see page 39).

20) Order a relay rack (see page 74).

21) Order Relay Rack Isolation Kit as required and as applicable. See "Relay Rack Isolation Kit" on page 74.

List 30: Shelf Rail Mounting Kits, Insulation Sheets, Output Busbar Kits, and Rear Cover Kits

Features

- Provides components to add one (1) to five (5) module mounting assembly(s) (Spec. No. 588705300) below a List 20, List 21, List 25, List 26, or List 27 distribution cabinet.

Restrictions

Factory installed only.

Includes 'module mounting assembly-to-power system/distribution cabinet' interconnect components only. The module mounting assembly(s) must be ordered separately.

Ordering Notes

1) Order one (1) List 30 per quantity of module mounting assemblies comprising the system. Specify how many module mounting assembly(s) are to be installed in the system with these interconnect components and if the system consists of a List 20, List 21, List 25, List 26, or List 27 distribution cabinet so correct kits can be provided and factory installed.

© 2026 Vertiv Group Corp. All Rights Reserved.

List 33: Field Expansion Module Mounting Assembly (23") Configured with Rectifier and -48 VDC to +24 VDC Converter Module Mounting Positions or -48 VDC to -58 VDC Converter Module Mounting Positions and Molex Input Connectors

Features

- Provides a field expansion module mounting assembly (P/N 58870530005) plus mounting hardware.
- The module mounting assembly holds up to six (6) rectifiers and/or up to three (3) -48 VDC to +24 VDC or -48 VDC to -58 VDC converter modules. Rectifier modules can be installed in any mounting position. Converter modules can be installed in any of the three far right mounting positions (as viewed from the front).
- Input cover assembly is provided with rear input Molex connectors factory wired to the rectifier mounting positions.

  Note: *Three (3) AC input Molex connectors furnished and factory wired to provide three (3) AC input feeds to the assembly. First AC input feeds rectifier mounting positions #1 and #2. Second AC input feeds rectifier mounting positions #3 and #4. Third AC input feeds rectifier mounting positions #5 and #6.*

Restrictions

Maximum of one (1) List 33, List 34, or List 36 per system.

Cannot expand system beyond five (5) module mounting assemblies.

Cannot be used with the inverter system (List 50-List 57).

Ordering Notes

1) Order List 33 for a module mounting assembly to be added in the field.
2) Order rectifier modules P/N 1R482000E3 as required (see page 83).
3) Order -48 VDC to +24 VDC converter modules P/N 1C48241500 as required (see page 83).
4) Order -48 VDC to -58 VDC converter modules P/N 1C48582000P3 as required (see page 84).
5) Order "Rectifier AC Input / Solar Converter DC Input Cable Assemblies and Rectifier AC Input Line Cords" as required (see page 98).

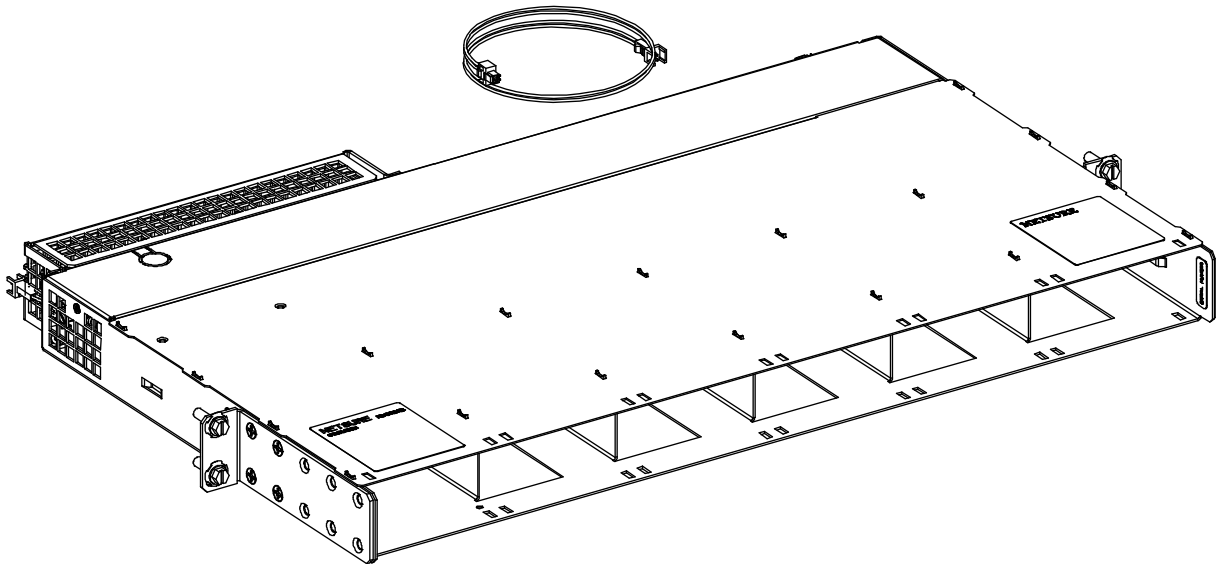

© 2026 Vertiv Group Corp. All Rights Reserved.

List 34: Field Expansion Module Mounting Assembly (23") Configured with Rectifier and/or Solar Converter Module Mounting Positions and Molex Input Connectors

Features

- Provides a field expansion module mounting assembly (P/N 58870530025) plus mounting hardware.
- The module mounting assembly holds up to six (6) rectifier and/or solar converter modules.
- Input cover assembly is provided with rear input Molex connectors factory wired to the rectifier / solar converter mounting positions.

  Note: *Three (3) rectifier / solar converter input Molex connectors furnished and factory wired to provide three (3) rectifier / solar converter input feeds to the assembly. First rectifier / solar converter input feeds rectifier / solar converter mounting positions #1 and #2. Second rectifier / solar converter input feeds rectifier / solar converter mounting positions #3 and #4. Third rectifier / solar converter input feeds rectifier / solar converter mounting positions #5 and #6.*

Restrictions

Maximum of one (1) List 33, List 34, or List 36 per system.

Cannot expand system beyond five (5) module mounting assemblies.

Cannot be used with the inverter system (List 50-List 57).

Ordering Notes

1) Order List 34 for a module mounting assembly to be added in the field.
2) Order rectifier modules P/N 1R482000E3 as required (see page 83).
3) Order solar converter modules P/N 1S482000E3 as required (see page 83).
4) Order "Rectifier AC Input / Solar Converter DC Input Cable Assemblies and Rectifier AC Input Line Cords" as required (see page 98).

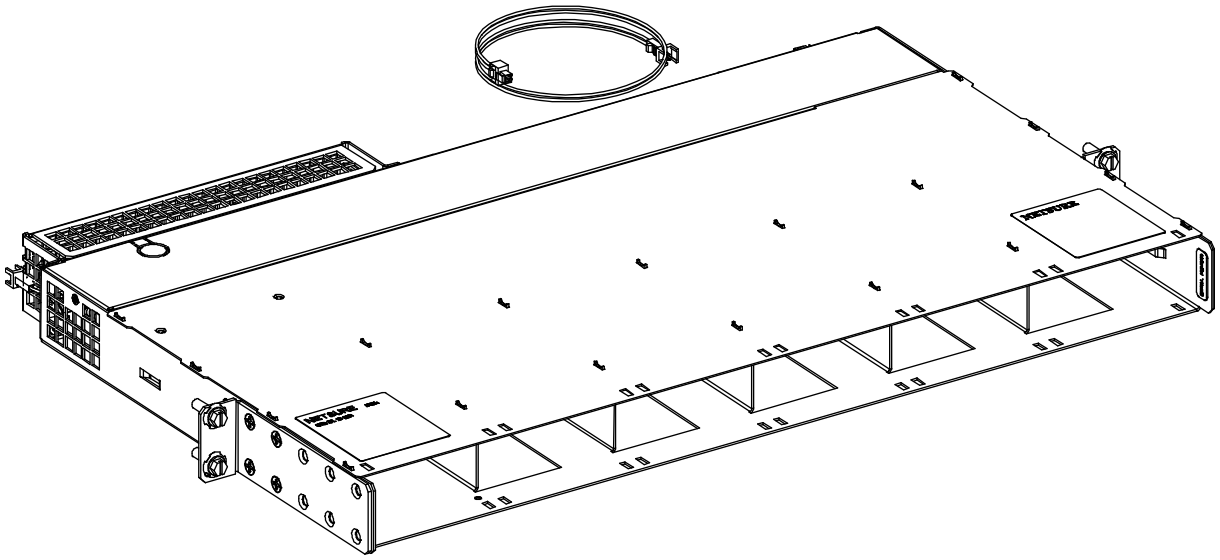

© 2026 Vertiv Group Corp. All Rights Reserved.

List 36: Field Expansion Module Mounting Assembly (19") Configured with Rectifier and/or Solar Converter Module Mounting Positions and Molex Input Connectors

Features

- Provides a field expansion module mounting assembly (P/N 58870530045) plus mounting hardware.
- The module mounting assembly holds up to five (5) rectifier and/or solar converter modules.
- Input cover assembly is provided with rear input Molex connectors factory wired to the rectifier / solar converter mounting positions.

  Note: *Three (3) rectifier / solar converter input Molex connectors furnished and factory wired to provide three (3) rectifier / solar converter input feeds to the assembly. First rectifier / solar converter input feeds rectifier / solar converter mounting positions #1 and #2. Second rectifier / solar converter input feeds rectifier / solar converter mounting positions #3 and #4. Third rectifier / solar converter input feeds rectifier / solar converter mounting position #5.*
- Includes spacer kit P/N 560075 for use with data cabinet 4-post mounting kit.

Restrictions

Maximum of one (1) List 33, List 34, or List 36 per system.

Cannot expand system beyond five (5) module mounting assemblies.

Cannot be used with the inverter system (List 50-List 57).

Ordering Notes

1) Order List 36 for a module mounting assembly to be added in the field.
2) Order rectifier modules P/N 1R482000E3 as required (see page 83).
3) Order solar converter modules P/N 1S482000E3 as required (see page 83).
4) Order "Rectifier AC Input / Solar Converter DC Input Cable Assemblies and Rectifier AC Input Line Cords" as required (see page 98).

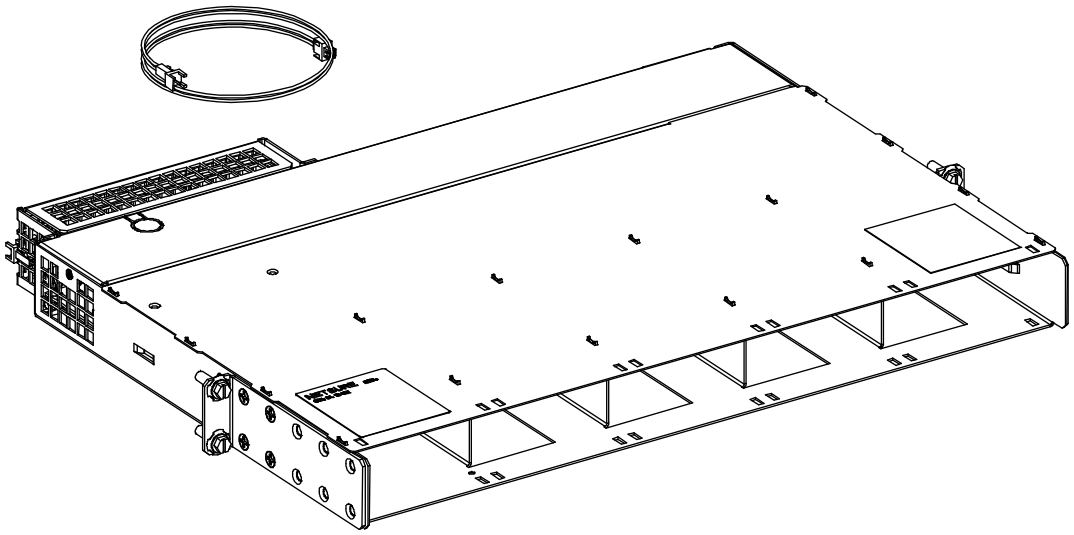

© 2026 Vertiv Group Corp. All Rights Reserved.

List 40: 19" Rectifier AC Input / Solar Converter DC Input Panel, Each Input Feeds One Module

Features

- Provides components to add a 19" rectifier AC input / solar converter DC input panel to the back of the distribution cabinet and corresponding wiring and rear cover to the module mounting assembly(s).
- Provides rectifier AC input / solar converter DC input terminal blocks for connection of single phase 120 VAC / 208 VAC / 240 VAC input feeds for all rectifier positions in the system and 140 VDC to 200 VDC / 200 VDC to 400 VDC input for all solar converter positions in the system. One (1) AC input feed required per one (1) rectifier position. One (1) DC input feed required per one (1) solar converter position. Refer to "Rectifier AC Input Connections" starting on page 104 and "Solar Converter DC Input Connections" starting on page 111 for specific wiring details.
- Customer can connect inputs to the module mounting assembly(s) using the terminal blocks in the Rectifier AC Input / Solar Converter DC Input Panel.

Restrictions

Factory installed only.

For initial installation only. Initial module mounting assemblies are factory wired to List 40. If a field expansion module mounting assembly is added to the system, rectifier AC inputs and solar converter DC inputs MUST be wired directly to the module mounting assembly.

Ordering Notes

1) Order List 40 as required (or order module mounting assemblies with input Molex connectors). See PD588705300. Specify how many module mounting assembly(s) are to be installed in the system so input wiring for all factory installed module mounting assemblies can be provided and factory connected.

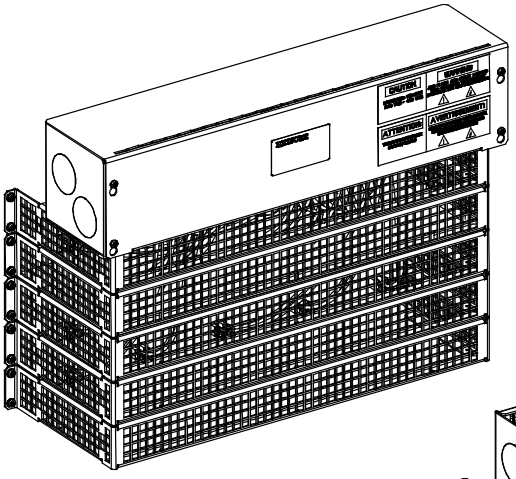

Rear

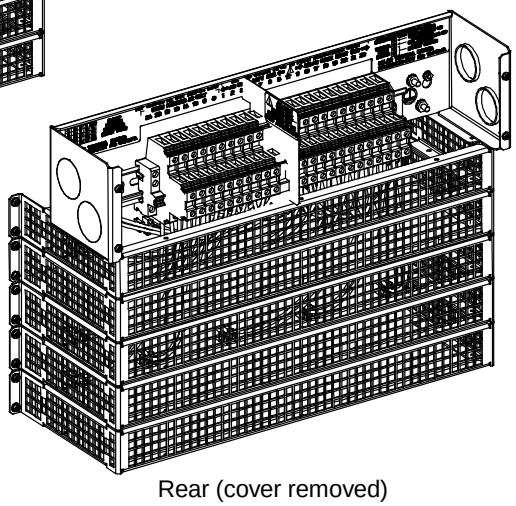

Rear (cover removed)

© 2026 Vertiv Group Corp. All Rights Reserved.

List 45: 23" Rectifier AC Input / Solar Converter DC Input Panel, Each Input Feeds One Module

Features

- Provides components to add a 23" Rectifier AC Input / Solar Converter DC Input Panel to the back of the distribution cabinet and corresponding wiring and rear cover to the module mounting assembly(s).
- Provides rectifier AC input / solar converter DC input terminal blocks for connection of single phase 120 VAC / 208 VAC / 240 VAC input feeds for all rectifier positions in the system and 140 VDC to 200 VDC / 200 VDC to 400 VDC input for all solar converter positions in the system. One (1) AC input feed required per one (1) rectifier position. One (1) DC input feed required per one (1) solar converter position. Refer to "Rectifier AC Input Connections" starting on page 104 and "Solar Converter DC Input Connections" starting on page 111 for specific wiring details.
- Customer can connect inputs to the module mounting assembly(s) using the terminal blocks in the Rectifier AC Input / Solar Converter DC Input Panel or (if furnished with a List 61 Solar Connection Cabinet) factory provides wiring between the Rectifier AC Input / Solar Converter DC Input Panel and the List 61 Solar Connection Cabinet.

Restrictions

Factory installed only.

For initial installation only. Initial module mounting assemblies are factory wired to List 45. If a field expansion module mounting assembly is added to the system, rectifier AC inputs and solar converter DC inputs MUST be wired directly to the module mounting assembly.

Ordering Notes

1) Order List 45 as required (or order module mounting assemblies with input Molex connectors). See PD588705300. Specify how many module mounting assembly(s) are to be installed in the system so input wiring for all factory installed module mounting assemblies can be provided and factory connected.

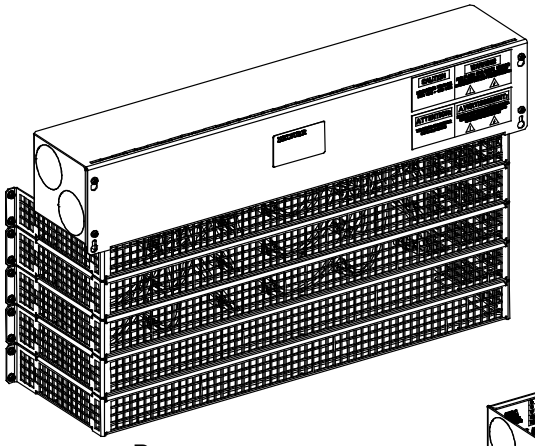

Rear

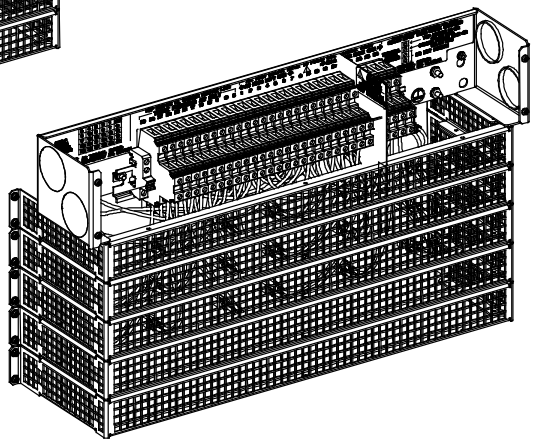

Rear (cover removed)

© 2026 Vertiv Group Corp. All Rights Reserved.

List 46: Rectifier AC Input Panel for 23" System, Each Input Feeds Two Rectifier Modules

Features

- Provides components to add a Rectifier AC Input Panel to the back of the distribution cabinet and corresponding wiring and rear cover to the module mounting assembly(s) for a 23" system.
- Provides rectifier AC input terminal blocks for connection of single phase 120 VAC / 208 VAC / 240 VAC input feeds for every two rectifier positions in the system. One (1) AC input feed required per two (2) rectifier positions. Refer to "Rectifier AC Input Connections" starting on page 104 for specific wiring details.

Restrictions

For use with Lists 25, 26, and 27 only.

Factory installed only.

For use with up to three (3) rectifier shelves.

Not for use with solar converters.

For initial installation only. Initial module mounting assemblies are factory wired to List 46. If a field expansion module mounting assembly is added to the system, rectifier AC inputs MUST be wired directly to the module mounting assembly.

Ordering Notes

1) Order List 46 as required (or order module mounting assemblies with input Molex connectors). See PD588705300. Specify how many module mounting assembly(s) are to be installed in the system so input wiring for all factory installed module mounting assemblies can be provided and factory connected.

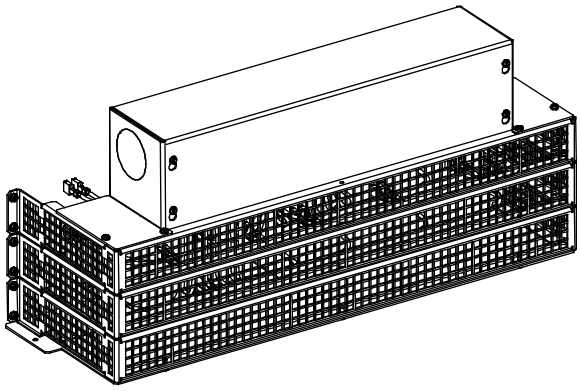

Rear

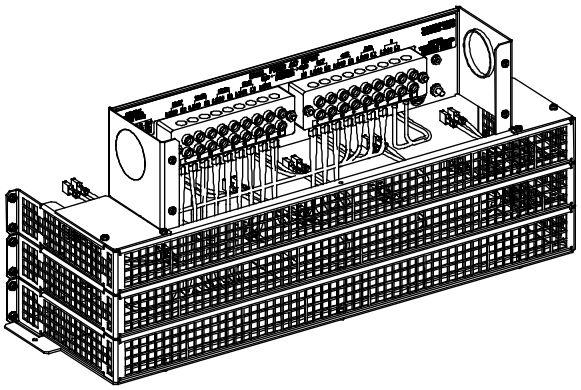

Rear (cover removed)

© 2026 Vertiv Group Corp. All Rights Reserved.

List 50: Inverter System, 19", up to 5kVA maximum, Bulk Output

Features

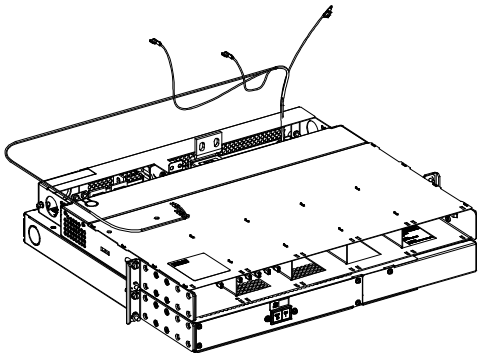

- Provides a bulk output inverter system.
- Inverter modules can be fed with DC individually or two at a time from the factory.
- One (1) 5-position inverter module mounting shelf.
- One (1) 1U bulk output AC distribution shelf (includes one 70 A circuit breaker).
- Includes the EPO (Emergency Power Off) board, which provides the EPO function.

Restrictions

Not a stand-alone system. Factory integrated into a Vertiv™ Power System.

For use with Vertiv™ Power System in a relay rack.

Cannot be used with a List 27 or List 60 or List 61 or List KG.

The inverter system uses breaker positions in the power system distribution for its DC input.

- Single feed option – Five (5) 30A factory-installed breakers
- Dual feed option – One (1) 30A and two (2) 60A factory-installed breakers

Maximum system output power when equipped with one (1) 19-inch-wide inverter shelf is 5kVA at 40 °C and 2.5kVA at 65 °C.

Ordering Notes

1) Order as required.

List 51: Inverter System, 19", up to 5kVA maximum, NEMA Outlet Output

Features

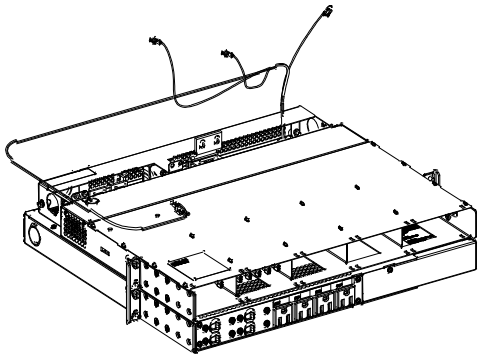

- Provides a NEMA 5-15 receptacle output inverter system.
- Inverter modules can be fed with DC individually or two at a time from the factory.
- One (1) 5-position inverter module mounting shelf.
- One (1) 1U NEMA output AC distribution shelf (includes four 15 A circuit breakers feeding receptacles).
- Includes the EPO (Emergency Power Off) board, which provides the EPO function.

Restrictions

Not a stand-alone system. Factory integrated into a Vertiv™ Power System.

For use with Vertiv™ Power System in a relay rack.

Cannot be used with a List 27 or List 60 or List 61 or List KG.

The inverter system uses breaker positions in the power system distribution for its DC input.

- Single feed option – Five (5) 30A factory-installed breakers
- Dual feed option – One (1) 30A and two (2) 60A factory-installed breakers

Maximum system output power when equipped with one (1) 19-inch-wide inverter shelf is 5kVA at 40 °C and 2.5kVA at 65 °C.

Ordering Notes

1) Order as required.

© 2026 Vertiv Group Corp. All Rights Reserved.

List 52: Inverter System, 23", up to 6kVA maximum, Bulk Output

Features

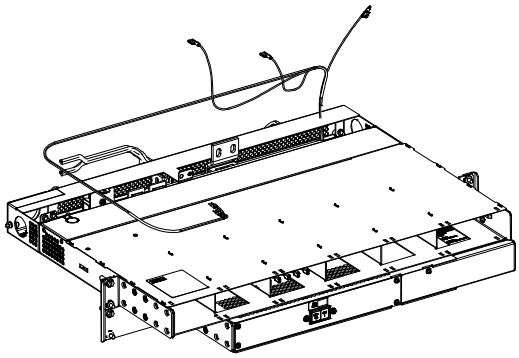

- Provides a bulk output inverter system.
- Inverter modules can be fed with DC individually or two at a time from the factory.
- One (1) 6-position inverter module mounting shelf.
- One (1) 1U bulk output AC distribution shelf (includes one 70 A circuit breaker).
- Includes the EPO (Emergency Power Off) board, which provides the EPO function.

Restrictions

Not a stand-alone system. Factory integrated into a Vertiv™ Power System.

For use with Vertiv™ Power System in a relay rack.

Cannot be used with a List 27 or List 60 or List 61 or List KG or List GB.

The inverter system uses breaker positions in the power system distribution for its DC input.

- Single feed option – Six (6) 30A factory-installed breakers
- Dual feed option – Three (3) 60A factory-installed breakers

Maximum system output power when equipped with one (1) 23-inch-wide inverter shelf is 6kVA at 40 °C and 3kVA at 65 °C.

Ordering Notes

1) Order as required.

List 53: Inverter System, 23", up to 6kVA maximum (5.76kVA per NEC breaker de-rating), NEMA Outlet Output

Features

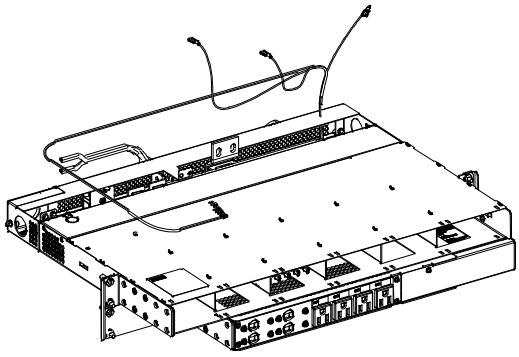

- Provides a NEMA 5-15 receptacle output inverter system.
- Inverter modules can be fed with DC individually or two at a time from the factory.
- One (1) 6-position inverter module mounting shelf.
- One (1) 1U NEMA output AC distribution shelf (includes four 15 A circuit breakers feeding receptacles).
- Includes the EPO (Emergency Power Off) board, which provides the EPO function.

Restrictions

Not a stand-alone system. Factory integrated into a Vertiv™ Power System.

For use with Vertiv™ Power System in a relay rack.

Cannot be used with a List 27 or List 60 or List 61 or List KG or List GB.

The inverter system uses breaker positions in the power system distribution for its DC input.

- Single feed option – Six (6) 30A factory-installed breakers
- Dual feed option – Three (3) 60A factory-installed breakers

Maximum system output power when equipped with one (1) 23-inch-wide inverter shelf is 5.76kVA at 40 °C and 3kVA at 65 °C.

Ordering Notes

1) Order as required.

© 2026 Vertiv Group Corp. All Rights Reserved.

List 54: Inverter System, 19", up to 10kVA maximum, Bulk Output

Features

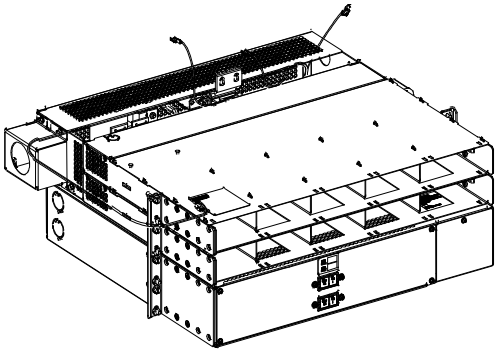

- Provides a bulk output inverter system.
- Inverter modules can be fed with DC individually or two at a time from the factory.
- Two (2) 5-position inverter module mounting shelves.
- One (1) 2U bulk output AC distribution shelf (includes two 70 A circuit breakers).
- Includes the EPO (Emergency Power Off) board, which provides the EPO function.

Restrictions

Not a stand-alone system. Factory integrated into a Vertiv™ Power System.

For use with Vertiv™ Power System in a relay rack.

Cannot be used with a List 27 or List 60 or List 61 or List KG.

The inverter system uses breaker positions in the power system distribution for its DC input.

- Single feed option – Ten (10) 30A factory-installed breakers
- Dual feed option – Five (5) 60A factory-installed breakers

Maximum system output power when equipped with two (2) 19-inch-wide inverter shelf is 10kVA at 40 °C and 5kVA at 65 °C.

Ordering Notes

1) Order as required.

List 55: Inverter System, 19", up to 10kVA maximum, NEMA Outlet Output

Features

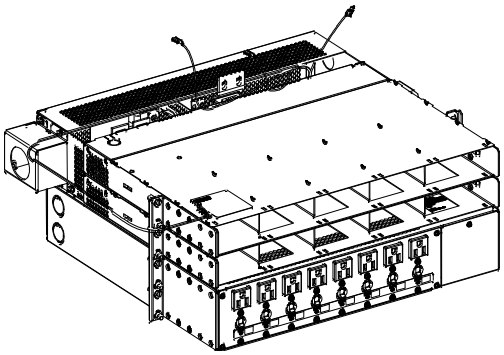

- Provides a NEMA 5-15 receptacle output inverter system.
- Inverter modules can be fed with DC individually or two at a time from the factory.
- Two (2) 5-position inverter module mounting shelves.
- One (1) 2U NEMA output AC distribution shelf (includes eight 15 A circuit breakers feeding receptacles).
- Includes the EPO (Emergency Power Off) board, which provides the EPO function.

Restrictions

Not a stand-alone system. Factory integrated into a Vertiv™ Power System.

For use with Vertiv™ Power System in a relay rack.

Cannot be used with a List 27 or List 60 or List 61 or List KG.

The inverter system uses breaker positions in the power system distribution for its DC input.

- Single feed option – Ten (10) 30A factory-installed breakers
- Dual feed option – Five (5) 60A factory-installed breakers

Maximum system output power when equipped with two (2) 19-inch-wide inverter shelf is 10kVA at 40 °C and 5kVA at 65 °C.

Ordering Notes

1) Order as required.

© 2026 Vertiv Group Corp. All Rights Reserved.

List 56: Inverter System, 23", up to 12kVA maximum, Bulk Output

Features

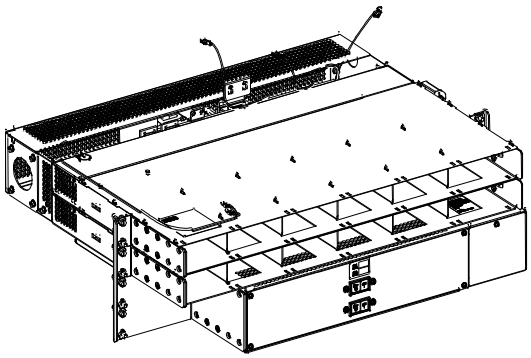

- Provides a bulk output inverter system.
- Inverter modules can be fed with DC individually or two at a time from the factory.
- Two (2) 6-position inverter module mounting shelves.
- One (1) 2U bulk output AC distribution shelf (includes two 70 A circuit breakers).
- Includes the EPO (Emergency Power Off) board, which provides the EPO function.

Restrictions

Not a stand-alone system. Factory integrated into a Vertiv™ Power System.

For use with Vertiv™ Power System in a relay rack.

Cannot be used with a List 27 or List 60 or List 61 or List KG or List GB.

The inverter system uses breaker positions in the power system distribution for its DC input.

- Single feed option – Twelve (12) 30A factory-installed breakers
- Dual feed option – Six (6) 60A factory-installed breakers

Maximum system output power when equipped with two (2) 23-inch-wide inverter shelf is 12kVA at 40 °C and 6kVA at 65 °C.

Ordering Notes

1) Order as required.

List 57: Inverter System, 23", up to 12kVA maximum (11.5kVA per NEC breaker de-rating), NEMA Outlet Output

Features

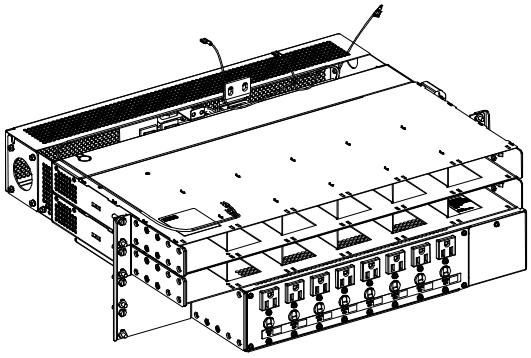

- Provides a NEMA 5-15 receptacle output inverter system.
- Inverter modules can be fed with DC individually or two at a time from the factory.
- Two (2) 6-position inverter module mounting shelves.
- One (1) 2U NEMA output AC distribution shelf (includes eight 15 A circuit breakers feeding receptacles).
- Includes the EPO (Emergency Power Off) board, which provides the EPO function.

Restrictions

Not a stand-alone system. Factory integrated into a Vertiv™ Power System.

For use with Vertiv™ Power System in a relay rack.

Cannot be used with a List 27 or List 60 or List 61 or List KG or List GB.

The inverter system uses breaker positions in the power system distribution for its DC input.

- Single feed option – Twelve (12) 30A factory-installed breakers
- Dual feed option – Six (6) 60A factory-installed breakers

Maximum system output power when equipped with two (2) 23-inch-wide inverter shelf is 11.5kVA at 40 °C and 6kVA at 65 °C.

Ordering Notes

1) Order as required.

© 2026 Vertiv Group Corp. All Rights Reserved.

List 60: 23" Hybrid Connection Cabinet

Features

- Provides a 23" Hybrid Connection Cabinet which provides four (4) circuit breaker positions up to 600 A and one (1) circuit breaker position up to 400 A for -48 VDC alternate energy sources.
- Includes SM-DU (for monitoring of the circuit breakers internal shunts).
- Includes circuit breaker shunt leads and circuit breaker alarm leads.

Restrictions

23" W mounting only.

Factory installed only.

Cannot be used with the inverter system (List 50-List 57).

Mounted below the lowest module mounting assembly in the rack.

At 40 °C, loads should not exceed 80% of the device rating. Circuit breakers rated from 100 A to 600 A can be used.

At 65 °C, loads should not exceed 80% of the device rating for circuit breakers rated 100 A to 250 A and 68% of the device rating for circuit breakers rated 300 A to 400 A. Circuit breakers rated from 100 A to 400 A can be used.

Ordering Notes

1) Order one (1) List 60 per system as required. Specify how many module mounting assembly(s) are to be installed in the system so correct output busbar kits can be provided and factory installed.
2) Order circuit breakers from Table 1.
3) Order blank panels for empty or not completely filled positions.
   - Order three (3) P/N BMY2300105/1 blank panels for any of the four (4) positions (far left positions) that accommodate breakers up to 600 A if they are left empty.
   - Order two (2) P/N BMY2300105/1 blank panels for the one (1) position (far right position) that accommodates a breaker up to 400 A if it is left empty.
   - Order P/N BMY2300105/1 blank panel for any position that a circuit breaker does not completely fill as required. Each blank panel covers a 1-pole position. The far-left positions accommodate up to a 3-pole device. The far right position accommodates up to a 2-pole device. Order one (1) P/N BMY2300105/1 blank panel for how many poles less the circuit breaker is than the position accommodates.

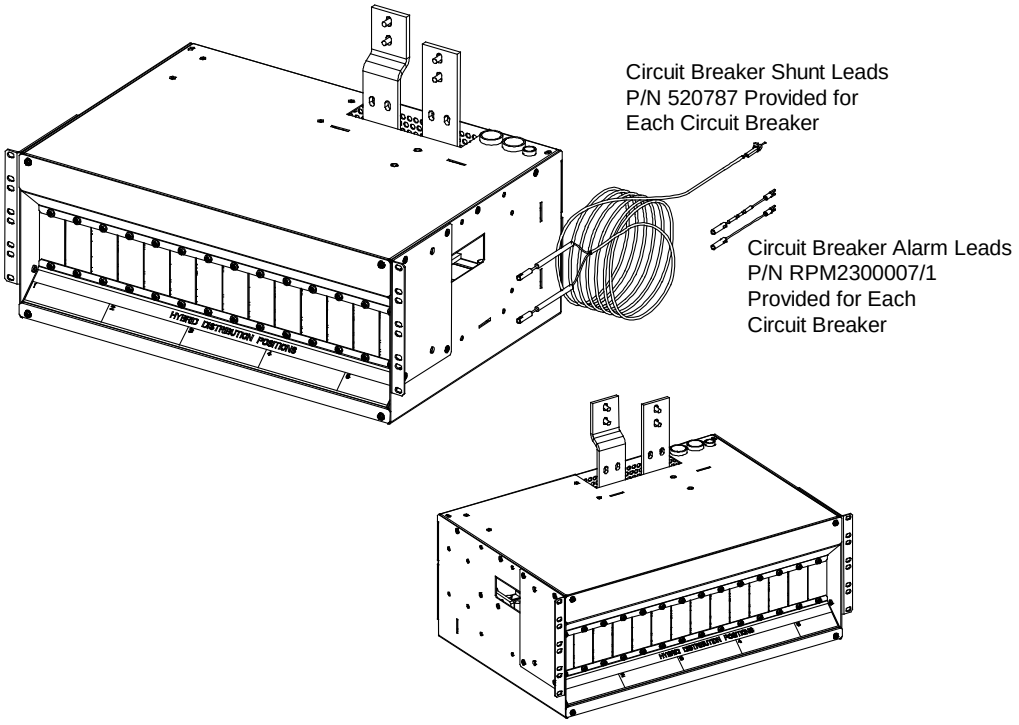

© 2026 Vertiv Group Corp. All Rights Reserved.

Ampere Rating	Number of Poles	P/N Electrical/Mechanical Trip[1] with Internal Shunt (25 mV @ full rated load)[3]	P/N Electrical Trip[2] with Internal Shunt (25 mV @ full rated load)[3]
100 A	1	123580	516184
125 A	1	123631	516187
150 A	1	123632	516185
175 A	1	123633	516186
200 A	1	123634	516188
225 A	1	123635	516189
250 A	1	123636	516190
300 A	2	550250DCP	550253
350 A	2	562238	562239
400 A	2	550251DCP	550254
600 A[4]	3	550252DCP	550255DCP

[1] Circuit Breaker Alarm Operation: Provides an alarm during an electrical or manual trip condition.

[2] Circuit Breaker Alarm Operation: Provides an alarm during an electrical trip condition only.

[3] Each shunt lead is equipped with a 49.9 ohm current limiting resistor. Shunt leads are factory wired to SM-DU.

[4] 400 A is maximum breaker value at 65 °C.
600 A circuit breakers cannot be used in a 65 °C application.

Table 1
GJ/218 Type Circuit Breakers

© 2026 Vertiv Group Corp. All Rights Reserved.

List 61: 23" Solar Connection Cabinet

Features

- Provides a 23" Solar Connection Cabinet, which provides eight (8) circuit breaker positions for 140 VDC to 200 VDC / 200 VDC to 400 VDC solar inputs for all solar converter positions in the system. One (1) DC input feed required per one (1) solar converter position.
- Includes seven (7) P/N BMY2300086/1 blank panels for unused circuit breaker positions.

Restrictions

23" W mounting only.

Cannot be used with the inverter system (List 50-List 57).

Can be factory installed or field installed if the system consists of a List 45 Rectifier AC Input / Solar Converter DC Input Panel. If factory installed and no List 45 Rectifier AC Input / Solar Converter DC Input Panel is furnished, factory provides wiring between the List 61 Solar Connection Cabinet and the solar converter inputs in the module mounting assembly(s). (No field upgrades allowed to add solar converter positions or remove solar converter positions.)

If List 61 Solar Connection Cabinet is factory installed and a List 45 Rectifier AC Input / Solar Converter DC Input Panel is furnished, the factory provides wiring between the List 61 Solar Connection Cabinet and the solar converter inputs in the module mounting assembly(s). In addition, the factory removes terminal block(s) and wiring from List 45 Panel corresponding to the number of factory installed solar converter circuit breakers.

If List 61 Solar Connection Cabinet is field installed or if additional solar converter circuit breakers are field installed, the customer needs to physically run the provided wire harness between the List 61 Solar Connection Cabinet and the solar converter inputs located in the List 45 Rectifier AC Input / Solar Converter DC Input Panel. Customer is also responsible for providing conduit from the List 61 Solar Connection Cabinet to the List 45 Rectifier AC Input / Solar Converter DC Input Panel.

The voltage applied to the circuit breakers of List 61 shall not exceed 250 VDC between either the positive or the negative conductor and earth. The individual poles of the circuit breaker are rated for a maximum of 250 VDC.

Ordering Notes

1) Order up to two (2) List 61 per system.
2) Order circuit breakers from Table 2.

Ampere Rating	P/N	
20 A	BMY 2300074/1	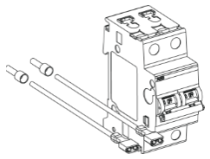

Table 2
Circuit Breakers

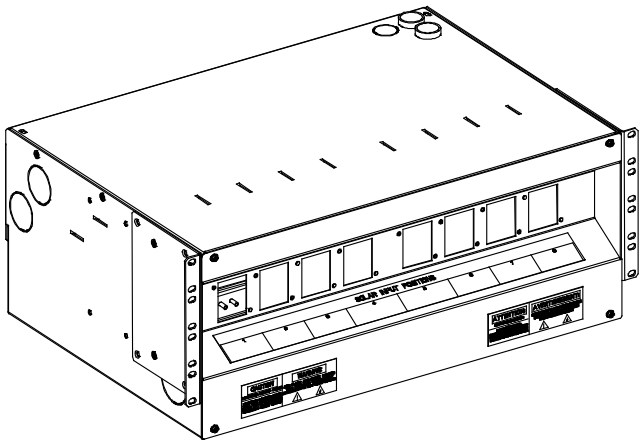

Front

© 2026 Vertiv Group Corp. All Rights Reserved.

List 70: Optional EIB (Controller Extended Interface Board), P/N MA455U41

Features

- Installed in a List 20, List 21, List 25, List 26, List 27 distribution cabinet.
- Provides five (5) programmable form-C relay outputs.
- Provides two (2) temperature inputs.
- Provides three (3) shunt inputs. Shunts must be installed in the hot (-48V) bus.
- Provides eight (8) battery midpoint inputs.

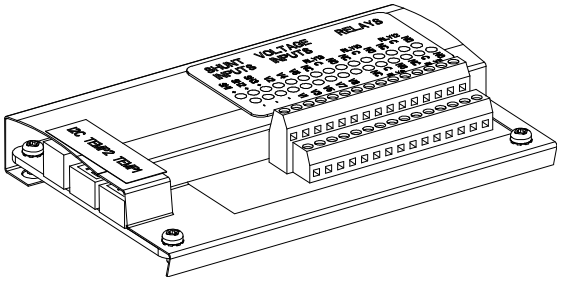

Restrictions

Only one (1) EIB per system.

Ordering Notes

1) Order one (1) List 70 per system as required.
2) Also order up to two (2) additional temperature probes, as desired. See "Optional Temperature Probes" on page 79.

List 93: Pre-Cabled Battery Tray for 23" Wide Relay Rack

Features

- Each List 93 provides one (1) battery tray factory mounted in the 23" wide system relay rack specified when ordered. Each battery tray holds four (4) 12 VDC front terminal valve regulated lead acid (VRLA) batteries. Battery cabling is factory provided and connected to the system's main busbars. Batteries are configured as one (1) 48 VDC string per tray.
- Battery trays can be ordered with or without a battery disconnect circuit breaker. When a circuit breaker is ordered, it is provided in the -48 VDC lead of each battery string (1 circuit breaker per tray).
- Battery spacers included.
- See "List 93 (23" Wide Battery Tray)" on page 173 for battery tray dimensions and typical arrangement. Note different battery trays are available to accommodate the various size batteries listed below.

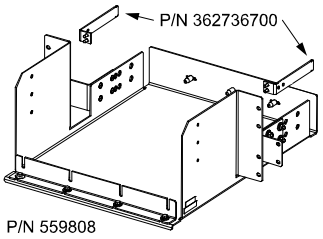

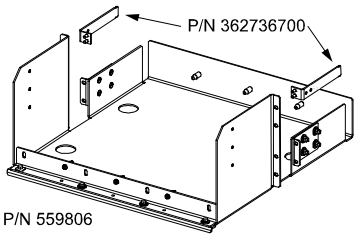

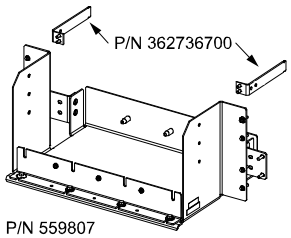

Restrictions

For 23" wide relay racks only.

Designed to accommodate the batteries listed below.

A single battery tray must mount at bottom of relay rack. Multiple battery trays must mount starting at bottom of relay rack and working upward. Factory spaces battery trays 6RU, 7RU, or 8RU apart as determined by battery selected. If no battery selected, factory spaces battery trays 8RU apart. Spacing can be increased above that required for the battery selected up to a maximum of 8RU.

A system can accommodate up to four (4) List 93's, depending on rack size and tray spacing.

Cable size for each tray is 2 AWG for optional battery disconnect circuit breaker selected up to 150 A and 1/0 AWG for circuit breaker selected over 150 A or if circuit breaker is not selected.

Not a stand-alone battery system. Must be used as part of a power system that includes a List 25, List 26, or List 27.

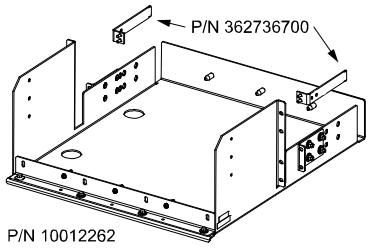

Ordering Notes

1) Order multiples of List 93 for more than one (1) battery tray. See **Restrictions** above.
2) Order one (1) or more P/N 362736700 cable bracket(s) as required.
3) Order batteries separately. Table 3, Table 4, Table 5, and Table 6 list the batteries recommended for use with List 93.
4) Specify rack spacing of 6U (10.5"), 7U (12.25"), or 8U (14") between trays and above top tray as required for battery clearance. See Table 3, Table 4, Table 5, and Table 6.

© 2026 Vertiv Group Corp. All Rights Reserved.

5) Specify the batteries you intend to use with each List 93 ordered. Lugs for battery connections vary according to the batteries to be installed. Battery cables will be lugged as shown in Table 3, Table 4, Table 5, and Table 6.

   Note: *If battery model is **not** specified, lugs will **not** be installed at factory. Instead, both available lug kits for the furnished wire size will be shipped loose with the order.*

6) Specify with or without tray-mounted battery disconnect circuit breakers.

   Note: *All List 93 trays in a rack will be furnished with or without battery disconnect circuit breakers as specified for the first tray ordered.*

7) If ordering List 93 with tray-mounted circuit breakers, order one (1) breaker per List 93 from Table 7.

8) If ordering List 93 with tray-mounted circuit breakers, specify breaker mounting on left or right side of tray. Circuit breaker mounting kits shown in Table 7 will be installed. Kit numbers are provided for reference only.

9) If ordering List 93 with tray-mounted circuit breakers, order alarm jumper P/N 524384 for each system to connect the alarm terminal of up to three (3) battery disconnect circuit breakers.

© 2026 Vertiv Group Corp. All Rights Reserved.

Battery Tray P/N 559806								
Manufacturer [1]	**Model**	**P/N**	**Rated 8-Hr. Capacity (Ah)**	**Dimension W x L x H (Inches)**	**Minimum Tray Spacing**	**Weight (per battery) (lb)**	**Lug Kit [2, 3] (2 AWG) (90°)**	**Lug Kit [2, 4] (1/0 AWG) (90°)**
Northstar	NSB155FT RED	--	155	4.9 x 22.0 x 11.0	7RU	101	528234	528235
Northstar	NSB170FT RED	126111	170	4.9 x 22.0 x 12.6	8RU	116	528234	528235
Northstar	NSB190FT RED	--	190	4.9 x 22.0 x 12.6	8RU	123	528234	528235
Northstar	NSB155FT HT	--	154	4.9 x 22.0 x 11.0	7RU	117	528234	528235
Northstar	NSB170FT HT	--	174	4.9 x 22.0 x 12.6	8RU	121	528234	528235
Northstar	NSB190FT HT	--	190	4.9 x 22.0 x 12.6	8RU	132	528234	528235
Deka Unigy I	12AVR-150ET	122018	150	4.90 x 22.00 x 11.75	8RU	115	528234	528235
Deka Unigy I	12AVR-170ET	541381	170	4.90 x 22.00 x 12.60	8RU	120	528234	528235
Deka Unigy I	HT170ET	--	164	4.93 x 22.17 x 12.58	8RU	118	528234	528235
C&D	TEL12-160F	140456	157	5.0 x 22.0 x 11.1	7RU	116.8	528236	528237
C&D	TEL12-180F	--	181	5.0 x 22.0 x 12.6	8RU	132.3	528236	528237
C&D	TEL12-210F	554579	202	5.0 x 22.0 x 12.6	8RU	132.3	528236	528237
Enersys	12V155FS	122010	155	4.90 x 22.10 x 11.10	7RU	106.9	528234	528235
Enersys	12V170FS	--	170	4.90 x 22.10 x 11.10	7RU	112	528234	528235
Enersys	SBS 170F	--	170	4.92 x 22.10 x 11.10	7RU	116	528234	528235
Enersys	SBS 190F	--	190	4.90 x 22.10 x 12.40	8RU	132	528234	528235
FIAMM	12FAT100	--	100	4.96 x 21.97 x 9.06	6RU	95	528234	528235
FIAMM	12FAT155	--	155	4.96 x 21.97 x 12.64	8RU	129	528234	528235
FIAMM	12FAT180	--	180	4.96 x 21.97 x 12.64	8RU	134	528234	528235
GS Yuasa	PYL12V160FT	--	160	4.9 x 21.9 x 11.0	7RU	116.2	528234	528235
GS Yuasa	PYL12V185FT	--	185	4.9 x 21.9 x 12.5	8RU	133.8	528234	528235

[1] *See "*Battery Manufacturer Information*". on page 178.*
[2] *Battery lug kit provides two lugs for one tray.*
[3] *Up to 150 A battery disconnect.*
[4] *Above 150 A or no battery disconnect chosen.*

Table 3

© 2026 Vertiv Group Corp. All Rights Reserved.

Battery Tray P/N 559807								
Manufacturer [1]	**Model**	**P/N**	**Rated 8-Hr. Capacity (Ah)**	**Dimension W x L x H (Inches)**	**Minimum Tray Spacing**	**Weight (per battery) (lb)**	**Lug Kit [3, 4] (2 AWG) (90°)**	**Lug Kit [3, 5] (1/O AWG) (90°)**
Northstar	NSB40FT [2]	--	38.1	3.80 X 9.80 X 8.20	6RU	34	528234	528235
Northstar	NSB60FT [2]	--	57.9	4.20 X 11.30 X 10.40	7RU	49	528234	528235
Enersys	12TD50F	--	48	4.2 X 10.9 X 8.7	6RU	38	528234	528235

[1] *See "*Battery Manufacturer Information*" on page 178*
[2] *Batteries MUST be equipped with front access terminal option. See battery manufacturer for ordering information.*
[3] *Battery lug kit provides two lugs for one tray.*
[4] *Up to 150 A battery disconnect.*
[5] *Above 150 A or no battery disconnect chosen.*

Table 4

Battery Tray P/N 559808								
Manufacturer [1]	**Model**	**P/N**	**Rated 8-Hr. Capacity (Ah)**	**Dimension W x L x H (Inches)**	**Minimum Tray Spacing**	**Weight (per battery) (lb)**	**Lug Kit [2, 3] (2 AWG) (90°)**	**Lug Kit [2, 4] (1/O AWG) (90°)**
Enersys	12TD150F	--	143	4.3 X 21.7 X 11.3	8RU	105	528234	528235

[1] *See "*Battery Manufacturer Information*" on page 178.*
[2] *Battery lug kit provides two lugs for one tray.*
[3] *Up to 150 A battery disconnect.*
[4] *Above 150 A or no battery disconnect chosen.*

Table 5

Battery Tray P/N 10012262								
Manufacturer [1]	**Model**	**P/N**	**Rated 8-Hr. Capacity (Ah)**	**Dimension W x L x H (Inches)**	**Minimum Tray Spacing**	**Weight (per battery) (lb)**	**Lug Kit [2, 3] (2 AWG) (90°)**	**Lug Kit [2, 4] (1/O AWG) (90°)**
Deka	12AVR200ET	--	200	4.97 X 24.30 X 12.74	8RU	151	528234	528235
Deka	HT200ET	--	200	4.97 X 24.15 X 12.74	8RU	151	528234	528235

[1] *See "*Battery Manufacturer Information*" on page 178.*
[2] *Battery lug kit provides two lugs for one tray.*
[3] *Up to 150 A battery disconnect.*
[4] *Above 150 A or no battery disconnect chosen.*

Table 6

© 2026 Vertiv Group Corp. All Rights Reserved.

Ampere Rating	Part No., Circuit Breaker, Electrical/Mechanical Trip[1] (Black Handle)	Part No., Left-Side Breaker Mtg. Kit (For Reference Only)	Part No., Right-Side Breaker Mtg. Kit (For Reference Only)
50	256694300	559814	559813
60	256694700		
70	256695100		
75	256695500		
100	256695900		
125	100765	559816	559815
150	100763		
200	121810	559816	559815

[1] Provides an alarm during an electrical or manual trip condition.

Table 7

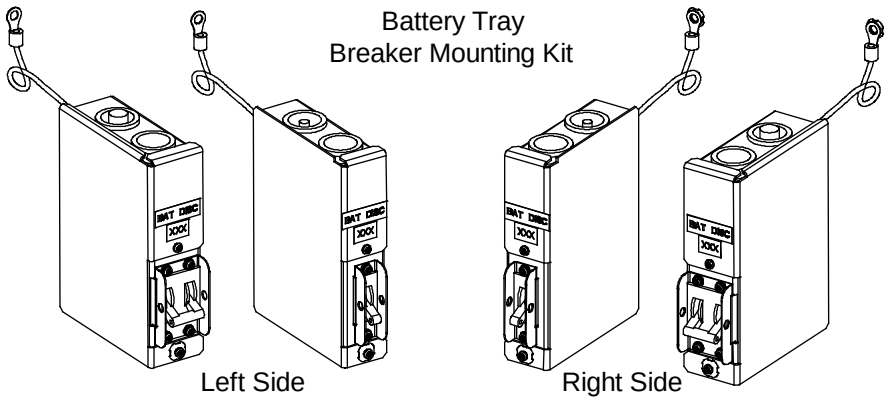

© 2026 Vertiv Group Corp. All Rights Reserved.

List 94: Pre-Cabled Battery Tray for 19" Wide Relay Rack

Features

- Each List 94 provides one (1) battery tray factory mounted in the 19" wide system relay rack specified when ordered. Each battery tray holds four (4) 12 VDC front terminal valve regulated lead acid (VRLA) batteries. Battery cabling is factory provided and connected to the system's main busbars. Batteries are configured as one (1) 48 VDC string per tray.
- Battery trays can be ordered with or without a battery disconnect circuit breaker. When a circuit breaker is ordered, it is provided in the -48 VDC lead of each battery string (1 circuit breaker per tray).
- Battery spacers included.
- See "List 94 (19" Wide Battery Tray)" on page 174 for battery tray dimensions and typical arrangement. Note different battery trays are available to accommodate the various size batteries listed below.

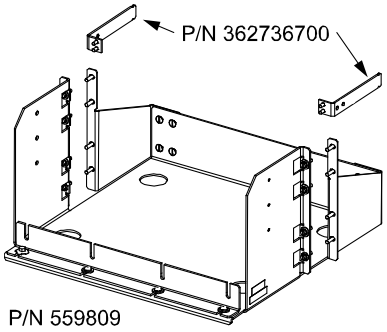

P/N 559809

Restrictions

For 19" wide relay racks only.

Designed to accommodate the batteries listed below.

A single battery tray must mount at bottom of relay rack. Multiple battery trays must mount starting at bottom of relay rack and working upward. Factory spaces battery trays 6RU, 7RU, or 8RU apart as determined by battery selected. If no battery selected, factory spaces battery trays 8RU apart. Spacing can be increased above that required for the battery selected up to a maximum of 8RU.

A system can accommodate up to four (4) List 94's, depending on rack size and tray spacing.

Cable size for each tray is 2 AWG for optional battery disconnect circuit breaker selected up to 150 A and 1/0 AWG for circuit breaker selected over 150 A or if circuit breaker is not selected.

Not a stand-alone battery system. Must be used as part of a power system that includes a List 20 or List 21.

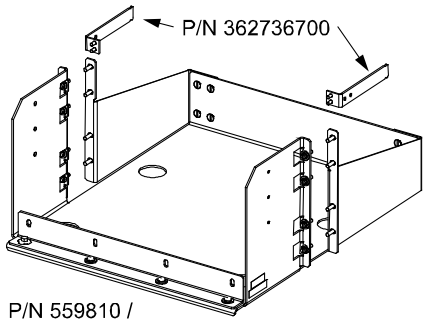

P/N 559810 /
P/N 559812

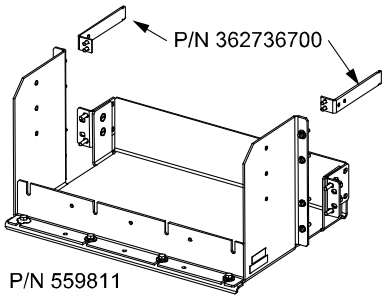

P/N 559811

Ordering Notes

1) Order multiples of List 94 for more than one (1) battery tray. See **Restrictions** above.
2) Order one (1) or more P/N 362736700 cable bracket(s) as required.
3) Order batteries separately. Table 8, Table 9, Table 10, and Table 11 list batteries recommended for use with List 94.
4) Specify rack spacing of 6U (10.5"), 7U (12.25"), or 8U (14") between trays and above top tray as required for battery clearance. See Table 8, Table 9, Table 10, and Table 11.
5) Specify the batteries you intend to use with each List 94 ordered. Lugs for battery connections vary according to the batteries to be installed. Battery cables will be lugged as shown in Table 8, Table 9, Table 10, and Table 11.

   Note: *If battery model is **not** specified, lugs will **not** be installed at factory. Instead, both available lug kits for the furnished wire size will be shipped loose with the order.*
6) Specify with or without tray-mounted battery disconnect circuit breakers.

   Note: *All List 94 trays in a rack will be furnished with or without battery disconnect circuit breakers as specified for the first tray ordered.*
7) If ordering List 94's with tray-mounted breakers, order one (1) circuit breaker per List 94 from Table 12.
8) If ordering List 94 with tray-mounted circuit breakers, specify breaker mounting on left side or right side of tray. Circuit breaker mounting kits shown in Table 12 will be installed. Kit numbers are provided for reference only.
9) If ordering List 94 with tray-mounted circuit breakers, order alarm jumper P/N 524384 for each system to connect the alarm terminal of up to three (3) battery disconnect circuit breakers to the system.

© 2026 Vertiv Group Corp. All Rights Reserved.

Battery Tray P/N 559809								
Manufacturer [1]	**Model**	**P/N**	**Rated 8-Hr. Capacity (Ah)**	**Dimension W x L x H (Inches)**	**Minimum Tray Spacing**	**Weight per Battery (lb)**	**Lug Kit [2, 3] (2 AWG) (90°)**	**Lug Kit [2, 4] (1/0 AWG) (90°)**
Northstar	NSB90FT	--	90	4.25 X 15.59 X 10.04	7RU	71	528234	528235
Northstar	NSB100FT	--	100	4.25 X 15.59 X 11.03	7RU	78	528234	528235
Enersys	12TD100F4	--	96	4.3 X 15.5 X 11.3	8RU	71	528234	528235
Enersys	12V92F	122005	92	4.10 X 16.40 X 10.10	7RU	61.7	528234	528235
Enersys	SBS 100F	--	100	4.30 X 15.60 X 11.30	7RU	71.9	528234	528235
Enersys	SBS C11F	--	91	4.10 X 16.40 X 10.10	7RU	61.6	528234	528235
FIAMM	12UMTX100/19FT	--	100	4.25 X 15.55 X 10.83	7RU	74.8	528234	528235
Northstar	NSB12-330FT	--	(330W)	4.20 X 15.60 X 10.00	7RU	70.6	528234	528235
Northstar	NSB12-380FT	--	(380W)	4.20 X 15.60 X 11.30	7RU	78.3	528234	528235

[1] *See "*Battery Manufacturer Information*" on page 178.*
[2] *Battery lug kit provides two lugs for one tray.*
[3] *Up to 150 A battery disconnect.*
[4] *Above 150 A or no battery disconnect chosen.*

Table 8

Battery Tray P/N 559810								
Manufacturer [1]	**Model**	**P/N**	**Rated 8-Hr. Capacity (Ah)**	**Dimension W x L x H (Inches)**	**Required Tray Spacing**	**Weight per Battery (lb)**	**Lug Kit [2, 3] (2 AWG) (90°)**	**Lug Kit [2, 4] (1/0 AWG) (90°)**
Enersys	12TD100F6	--	97	4.3 X 20.0 X 9.4	7RU	73	528234	528235
Deka	12AVR100ET	241270905	96	4.33 X 20.13 X 9.38	6 RU	75	528234	528235
Enersys	12VE115F	--	101	4.33 X 20.10 X 9.25	6 RU	80.5	528234	528235

[1] *See "*Battery Manufacturer Information*" on page 178*
[2] *Battery lug kit provides two lugs for one tray.*
[3] *Up to 150 A battery disconnect.*
[4] *Above 150 A or no battery disconnect chosen.*

Table 9

© 2026 Vertiv Group Corp. All Rights Reserved.

Battery Tray P/N 559811								
Manufacturer [1]	**Model**	**P/N**	**Rated 8-Hr. Capacity (Ah)**	**Dimension W x L x H (Inches)**	**Required Tray Spacing**	**Weight per Battery (lb)**	**Lug Kit [3, 4] (2 AWG) (90°)**	**Lug Kit [3, 5] (1/O AWG) (90°)**
Northstar	NSB40FT [2]	--	38.1	3.80 X 9.80 X 8.20	6RU	34	528234	528235
Northstar	NSB60FT [2]	--	57.9	4.20 X 11.30 X 10.40	7RU	49	528234	528235
Enersys	12TD50F	--	48	4.2 X 10.9 X 8.7	6RU	38	528234	528235

[1] *See "*Battery Manufacturer Information*" on page 178.*
[2] *Batteries MUST be equipped with front access terminal option. See battery manufacturer for ordering information.*
[3] *Battery lug kit provides two lugs for one tray.*
[4] *Up to 150 A battery disconnect.*
[5] *Above 150 A or no battery disconnect chosen.*

Table 10

Battery Tray P/N 559812								
Manufacturer [1]	**Model**	**P/N**	**Rated 8-Hr. Capacity (Ah)**	**Dimension W x L x H (Inches)**	**Required Tray Spacing**	**Weight (per battery) (lb)**	**Lug Kit [2, 3] (2 AWG) (90°)**	**Lug Kit [2, 4] (1/O AWG) (90°)**
Enersys	12V125F	122009	125	4.10 X 22.10 X 12.40	8RU	124	528236	528237
Enersys	12TD150F	--	143	4.3 X 21.7 X 11.3	8RU	105	528234	528235

[1] *See "*Battery Manufacturer Information*" on page 178.*
[2] *Battery lug kit provides two lugs for one tray.*
[3] *Up to 150 A battery disconnect.*
[4] *Above 150 A or no battery disconnect chosen.*

Table 11

Ampere Rating	**Part No., Circuit Breaker, Electrical/Mechanical Trip[1] (Black Handle)**	**Part No., Left-Side Breaker Mtg. Kit (For Reference Only)**	**Part No., Right-Side Breaker Mtg. Kit (For Reference Only)**
50	256694300	559814	559813
60	256694700		
70	256695100		
75	256695500		
100	256695900		
125	100765	559816	559815
150	100763		
200	121810	559816	559815

[1] *Provides an alarm during an electrical or manual trip condition.*

Table 12

© 2026 Vertiv Group Corp. All Rights Reserved.

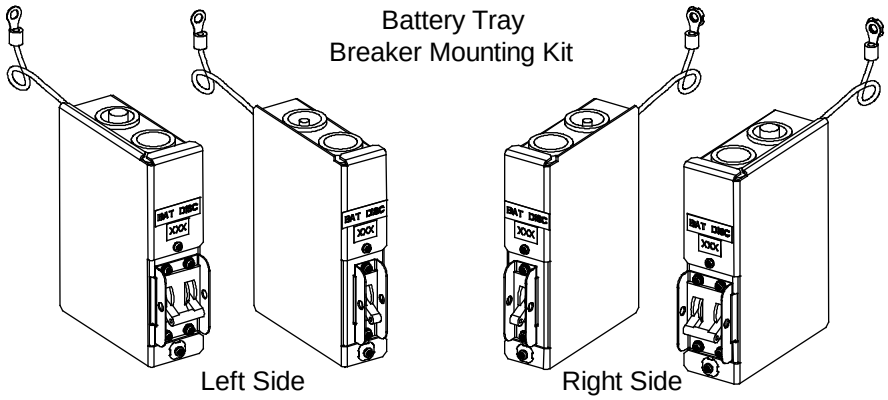

List 500, 500TG: -48 VDC/-58 VDC Power System

Features

- Provides a "power" system rated for 600 A @ -48 VDC (400 A maximum per row) and 248 A @ -58 VDC @ 40°C as configured. Rated at 400 A @ -48 VDC (300 A maximum per row) and 199 A @ -58 VDC @ 65°C as configured.
- This is a preconfigured power system which is orderable by specifying one List number. This power system is preconfigured as follows.

  All system components mounted in shipping rails on a pallet.

  Includes a 2-row distribution cabinet.

  Includes one (1) List FC distribution panel in the top row.

  Includes one (1) List AB distribution panel in the bottom row.

  Includes the NCU controller (with custom configuration).

  Includes a battery disconnect contactor providing low voltage battery disconnect.

  Includes a system interface board which provides an RS485 connection point and an RJ45 CAN interface connector.

  Includes one (1) IB2 controller interface board (provides eight (8) programmable form C- relay outputs, four (4) programmable binary inputs, and two (2) temperature inputs).

  Includes one (1) EIB controller extended interface board (provides five (5) programmable form-C relay outputs, two (2) temperature inputs, three (3) shunt inputs, and eight (8) battery midpoint inputs). See page 39.

  Includes two (2) 3M temperature probes.

  Includes the IB5 board with a second Ethernet port. The Ethernet port located on the NCU Controller's front panel can be used to connect a computer directly to the NCU. The Ethernet port located on the IB5 board can be used to connect the NCU to your Local Area Network (LAN).

  Includes one (1) six position rectifier and controller shelf (one position accepts a controller and five positions accept rectifiers only).

  Includes three (3) rectifier/converter shelves (three positions accept rectifiers only, three positions accept rectifiers or converters).

  Includes rear access AC input molex connectors with two rectifiers per AC feed, single phase.

  Includes twelve (12) 553203 6' AC cords.

  Includes twenty-six (26) 559803 single pole right angle adapters.

  List 500TG includes a Telematics Gateway and one (1) 3M temperature probe.

Ordering Notes

1) Order fuses and/or circuit breakers as required per "DC Distribution Devices" starting on page 87.
2) Order input and load distribution lugs, lug adapters, and lug hardware kits as required per "Recommended Wire Sizes, Branch Circuit Protection, Crimp Lugs, and Wiring Illustrations" starting on page 102.
3) Order rectifier modules P/N 1R482000E3 as required (see page 83).
4) Order -48 VDC to -58 VDC converter modules P/N 1C48582000P3 as required (see page 84).
5) Order a module mounting position blank cover panel, P/N SXA 110 0035/1, for each empty module mounting position in the system, as desired (see page 86).

© 2026 Vertiv Group Corp. All Rights Reserved.

6) A DC generator input circuit breaker kit P/N 564895 is available for field installation. This kit provides the components to install a 400 A circuit breaker to feed the rectifier output bus of the power system. A customer connects an external generator output to this circuit breaker which then supplies generator input power to the system. Load should not exceed 65% of the 400 A circuit breaker device rating.

List 501: -48 VDC/-58 VDC Power System

Features

- Provides a "power" system rated for 600 A @ -48 VDC (400 A maximum per row) and 331 A @ -58 VDC @ 55°C in the F2021011 cabinet as configured.
- This is a preconfigured power system in a cabinet which is orderable by specifying F2021011. This power system in the cabinet is preconfigured as follows.

  All system components mounted in the F2021011 cabinet.

  Includes a 2-row distribution cabinet.

  Includes one (1) List FE distribution panel in the top row.

  Includes one (1) List AB distribution panel in the bottom row.

  Includes the NCU controller (with custom configuration).

  Includes a battery disconnect contactor providing low voltage battery disconnect.

  Includes a system interface board which provides an RS485 connection point and an RJ45 CAN interface connector.

  Includes one (1) IB2 controller interface board (provides eight (8) programmable form C- relay outputs, eight (8) programmable binary inputs, and two (2) temperature inputs).

  Includes one (1) EIB controller extended interface board (provides five (5) programmable form-C relay outputs, two (2) temperature inputs, three (3) shunt inputs, and eight (8) battery midpoint inputs). See page 39.

  Includes two (2) 10M temperature probes.

  Includes one (1) six position rectifier and controller shelf (one position accepts a controller and five positions accept rectifiers only).

  Includes four (4) rectifier/converter shelves (three positions accept rectifiers only, three positions accept converters).

  Includes rear access AC input molex connectors with two rectifiers per AC feed, single phase.

Ordering Notes

1) This system is ordered only in cabinet F2021011.
2) Order fuses and/or circuit breakers as required per "DC Distribution Devices" starting on page 87.
3) Order input and load distribution lugs, lug adapters, and lug hardware kits as required per "Recommended Wire Sizes, Branch Circuit Protection, Crimp Lugs, and Wiring Illustrations" starting on page 102.
4) Order rectifier modules P/N 1R482000E3 as required (see page 83).
5) Order -48 VDC to -58 VDC converter modules P/N 1C48582000P3 as required (see page 84).
6) Order a module mounting position blank cover panel, P/N SXA 110 0035/1, for each empty module mounting position in the system, as desired (see page 86).

© 2026 Vertiv Group Corp. All Rights Reserved.

Single Voltage Load Distribution Panel

List AA: -48 VDC Load Distribution Panel
(24) -48 VDC Bullet/TPS/TLS Circuit Breaker/Fuse Load Positions

Features

- (24) -48 VDC Load Distribution Fuse / Circuit Breaker Mounting Positions.
  3 A to 100 A TPS/TLS Type Fuses.
  1 A to 400 A Bullet Nose Type Circuit Breakers.
  Also accepts “Optional 6-Position GMT Distribution Fuse Block”.
- Maximum Capacity: 400 A @ 40 °C, 300 A @ 65 °C.

Restrictions

For use in List 25 only.

Maximum lug width, 0.625 inches.

See also “Restrictions” under “Bullet Nose Type Circuit Breakers and Bullet Nose Type Fuseholders equipped with TPS/TLS Fuses” on page 87.

Ordering Notes

1) Order fuses and/or circuit breakers as required per “Distribution Devices” on page 87.
   a) Order circuit breakers as required per Table 14.
   b) Order fuses as required per Table 15. Also order one (1) P/N 117201 bullet nose type fuseholder per fuse ordered. Order replacement alarm fuses (18/100 A) per Table 21.
2) Order 6-position GMT fuse block P/N 559737 (see page 90) as required. Order GMT fuses as required per Table 16.
3) Order optional Transient Voltage Surge Suppressor (TVSS) Device(s) as required (see page 86).
4) Order load distribution lugs, lug adapters, and lug hardware kits as required per “Standard Crimp Lugs, Special Application Crimp Lugs, and Busbar Adapter Kits and Hardware Kits” on page 94.

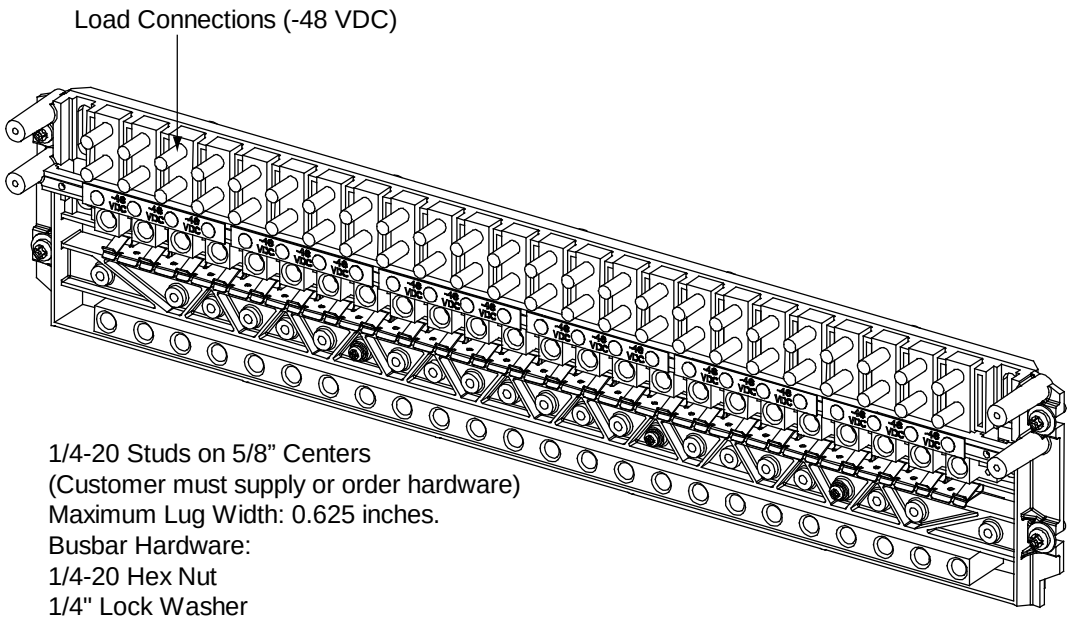

© 2026 Vertiv Group Corp. All Rights Reserved.

List AB: -48 VDC Load Distribution Panel
(26) -48 VDC Bullet/TPS/TLS Circuit Breaker/Fuse Load Positions

Features

- (26) -48 VDC Load Distribution Fuse / Circuit Breaker Mounting Positions.
  3 A to 100 A TPS/TLS Type Fuses.
  1 A to 400 A Bullet Nose Type Circuit Breakers.
  Also accepts “Optional 6-Position GMT Distribution Fuse Block”.
- Maximum Capacity: 400 A @ 40 °C, 300 A @ 65 °C.

Restrictions

For use in List 26 only.

Maximum lug width, 0.625 inches.

See also “Restrictions” under “Bullet Nose Type Circuit Breakers and Bullet Nose Type Fuseholders equipped with TPS/TLS Fuses” on page 87.

Ordering Notes

1) Specify row in a List 26 distribution cabinet for panel location (can be installed in top and/or bottom row). Recommend to install in bottom row so dual voltage load distribution panel can be installed in top row.
2) Order fuses and/or circuit breakers as required per “Distribution Devices” on page 87.
   a) Order circuit breakers as required per Table 14.
   b) Order fuses as required per Table 15. Also order one (1) P/N 117201 bullet nose type fuseholder per fuse ordered. Order replacement alarm fuses (18/100 A) per Table 21.
3) List 26: Order 6-position GMT fuse block P/N 559737 for the top row (see page 90) as required.
   Order 6-position GMT fuse block PN 549017 for the bottom row (see page 91) as required.
   Order GMT fuses as required per Table 16.
4) Order optional Transient Voltage Surge Suppressor (TVSS) Device(s) as required (see page 86).
5) Order load distribution lugs, lug adapters, and lug hardware kits as required per “Standard Crimp Lugs, Special Application Crimp Lugs, and Busbar Adapter Kits and Hardware Kits” on page 94.

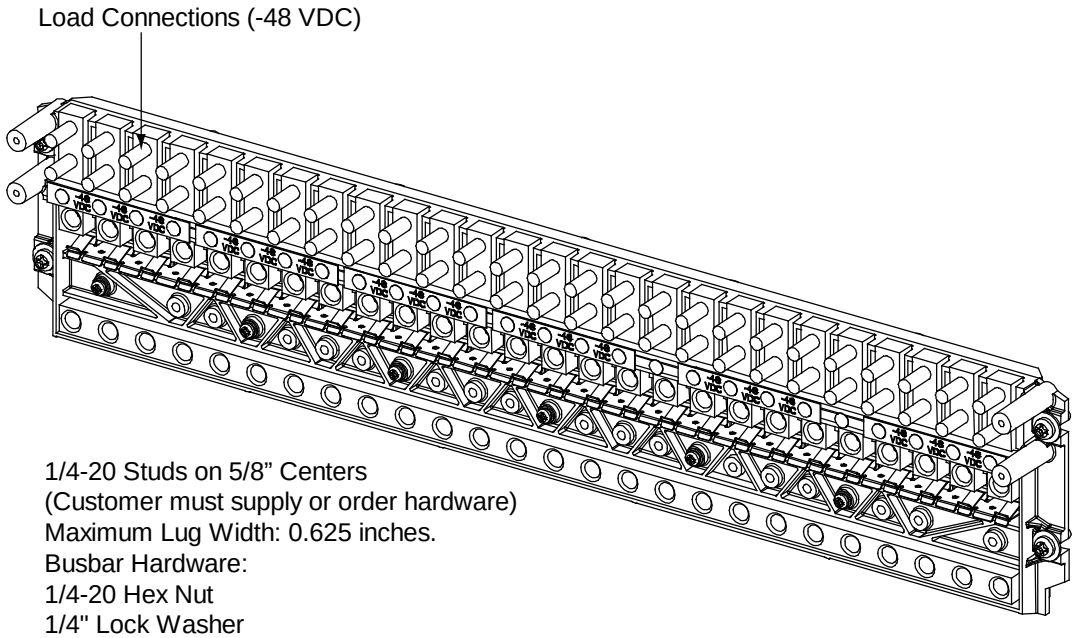

© 2026 Vertiv Group Corp. All Rights Reserved.

List AN: -48 VDC Load Distribution Panel
(19) -48 VDC Bullet/TPS/TLS Circuit Breaker/Fuse Load Positions

Features

- (19) -48 VDC Load Distribution Fuse / Circuit Breaker Mounting Positions.
  3 A to 100 A TPS/TLS Type Fuses.
  1 A to 400 A Bullet Nose Type Circuit Breakers.
  Also accepts “Optional 6-Position GMT Distribution Fuse Block”.
- Maximum Capacity: 400 A @ 40 °C, 300 A @ 65 °C.

Restrictions

For use in List 20 only.

Maximum lug width, 0.625 inches.

See also “Restrictions” under “Bullet Nose Type Circuit Breakers and Bullet Nose Type Fuseholders equipped with TPS/TLS Fuses” on page 87.

Ordering Notes

1) Order fuses and/or circuit breakers as required per “Distribution Devices” on page 87.
   a) Order circuit breakers as required per Table 14.
   b) Order fuses as required per Table 15. Also order one (1) P/N 117201 bullet nose type fuseholder per fuse ordered. Order replacement alarm fuses (18/100 A) per Table 21.
2) Order 6-position GMT fuse block P/N 559737 (see page 90) as required. Order GMT fuses as required per Table 16.
3) Order optional Transient Voltage Surge Suppressor (TVSS) Device(s) as required (see page 86).
4) Order load distribution lugs, lug adapters, and lug hardware kits as required per “Standard Crimp Lugs, Special Application Crimp Lugs, and Busbar Adapter Kits and Hardware Kits” on page 94.

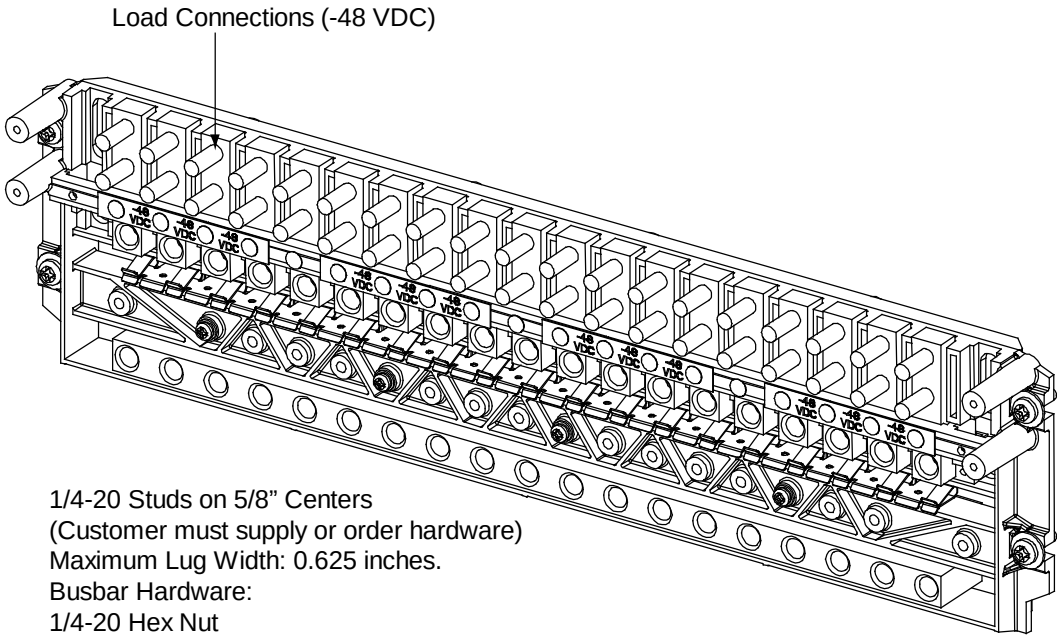

1/4-20 Studs on 5/8” Centers
(Customer must supply or order hardware)
Maximum Lug Width: 0.625 inches.
Busbar Hardware:
1/4-20 Hex Nut
1/4" Lock Washer
1/4" Flat Washer
Recommended Torque: 75 in-lbs.

© 2026 Vertiv Group Corp. All Rights Reserved.

List AO: -48 VDC Load Distribution Panel
(21) -48 VDC Bullet/TPS/TLS Circuit Breaker/Fuse Load Positions

Features

- (21) -48 VDC Load Distribution Fuse / Circuit Breaker Mounting Positions.
  3 A to 100 A TPS/TLS Type Fuses.
  1 A to 400 A Bullet Nose Type Circuit Breakers.
  Also accepts “Optional 6-Position GMT Distribution Fuse Block”.
- Maximum Capacity: 400 A @ 40 °C, 300 A @ 65 °C.

Restrictions

For use in List 21 only.

Maximum lug width, 0.625 inches.

See also “Restrictions” under “Bullet Nose Type Circuit Breakers and Bullet Nose Type Fuseholders equipped with TPS/TLS Fuses” on page 87.

Ordering Notes

1) Specify row in a List 21 distribution cabinet for panel location (can be installed in top and/or bottom row).
2) Order fuses and/or circuit breakers as required per “Distribution Devices” on page 87.
   a) Order circuit breakers as required per Table 14.
   b) Order fuses as required per Table 15. Also order one (1) P/N 117201 bullet nose type fuseholder per fuse ordered. Order replacement alarm fuses (18/100 A) per Table 21.
3) Order 6-position GMT fuse block P/N 559737 for the top row (see page 90) as required.
   Order 6-position GMT fuse block PN 549017 for the bottom row (see page 91) as required.
   Order GMT fuses as required per Table 16.
4) Order optional Transient Voltage Surge Suppressor (TVSS) Device(s) as required (see page 86).
5) Order load distribution lugs, lug adapters, and lug hardware kits as required per “Standard Crimp Lugs, Special Application Crimp Lugs, and Busbar Adapter Kits and Hardware Kits” on page 94.

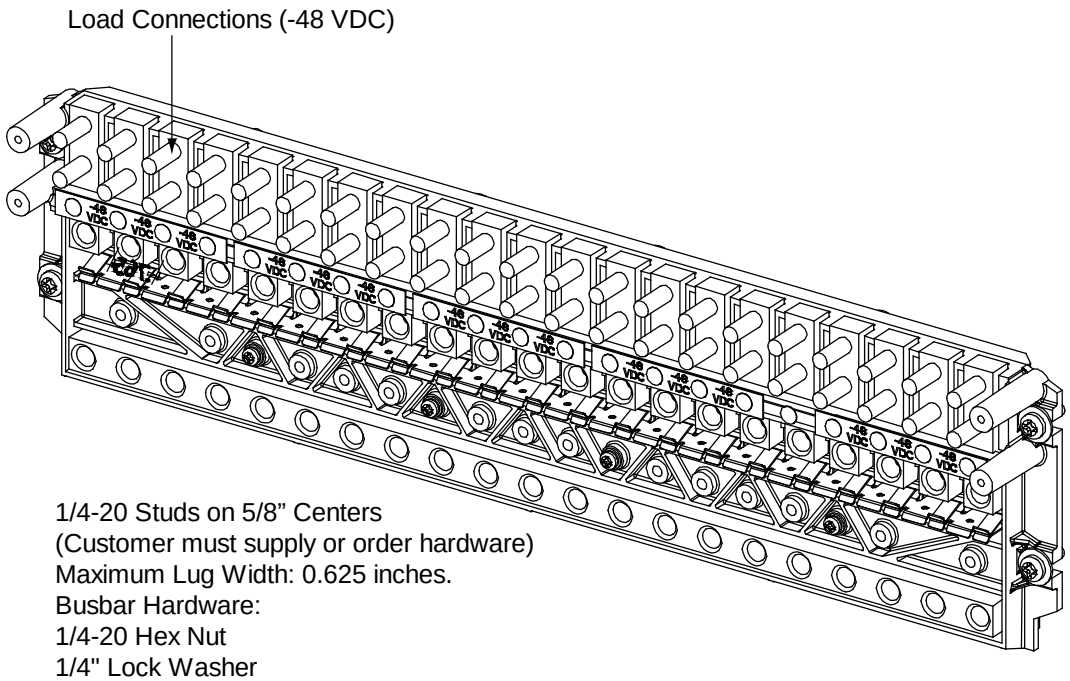

© 2026 Vertiv Group Corp. All Rights Reserved.

List KG: Distribution Panel with (20) GMT Load Fuses

Features

- A 1RU high by 19" wide distribution panel with (20) GMT fuse load distribution positions (0 A to 15 A).
- Maximum Capacity: 80 A @ +40 °C (+104 °F) and 80 A @ +65 °C (+149 °F).
- If one or more distribution fuses opens, one set of Form-C relay contacts changes state, and resistive battery is provided to an alarm terminal. Alarm circuit is factory connected to activate the Power System Controller fuse alarm.
- Reversible mounting angles provided for mounting in a 19" or 23" wide relay rack.
- If the distribution cabinet in the system is equipped with Low Voltage Load Disconnect (LVLD), all List KG loads are NOT disconnected.

Restrictions

Factory mounted and connected to the system. Mounts only immediately below the last shelf in the system.
If an expansion shelf needs to be added later, List KG must be relocated below expansion shelf.

Maximum distribution current is 80 A.

See also "Restrictions" under "GMT Type Load Distribution Fuses" on page 93.

Cannot be used with the inverter system (List 50-List 57).

Ordering Notes

1) Order one (1) List KG GMT Distribution Fuse Panel Assembly for each system, as required.
2) Order GMT fuses as required per "GMT Type Load Distribution Fuses" on page 93.

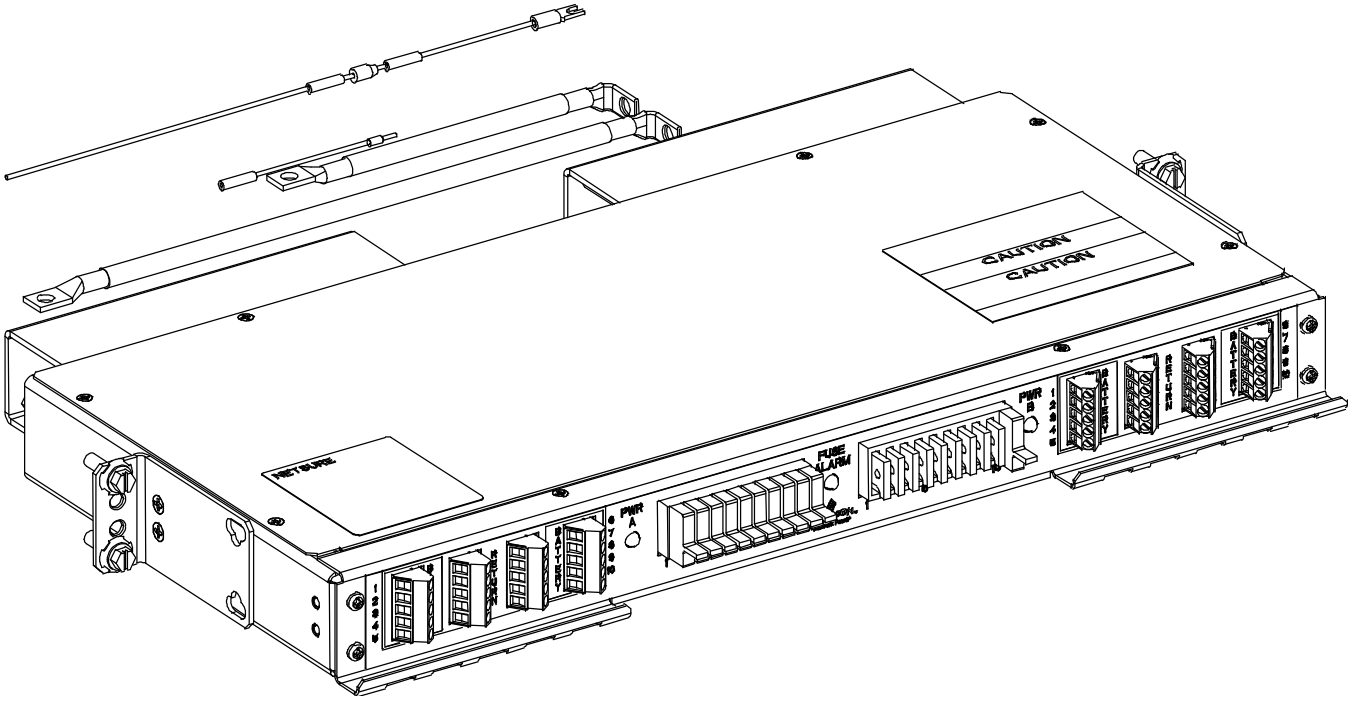

© 2026 Vertiv Group Corp. All Rights Reserved.

Single Voltage Plus Battery Disconnect Distribution Panel

List BA: -48 VDC Load Distribution Plus -48 VDC Battery Disconnect Panel
(18) -48 VDC Bullet/TPS/TLS Circuit Breaker/Fuse Load Positions
(6) -48 VDC Bullet/TPS/TLS Circuit Breaker/Fuse Battery Positions

Features

- (18) -48 VDC Load Distribution Fuse / Circuit Breaker Mounting Positions.
  (6) -48 VDC Battery Distribution Fuse / Circuit Breaker Mounting Positions.
  3 A to 100 A TPS/TLS Type Fuses.
  1 A to 400 A Bullet Nose Type Circuit Breakers.
  Also accepts “Optional 6-Position GMT Distribution Fuse Block”.
- Maximum Capacity: 400 A @ 40 °C, 300 A @ 65 °C.

Restrictions

For use in List 25 only.

Maximum lug width, 0.625 inches.

See also “Restrictions” under “Bullet Nose Type Circuit Breakers and Bullet Nose Type Fuseholders equipped with TPS/TLS Fuses” on page 87.

Ordering Notes

1) Order fuses and/or circuit breakers as required per “Distribution Devices” on page 87.
   a) Order circuit breakers as required per Table 14.
   b) Order fuses as required per Table 15. Also order one (1) P/N 117201 bullet nose type fuseholder per fuse ordered. Order replacement alarm fuses (18/100 A) per Table 21.
2) Order 6-position GMT fuse block P/N 559737 (see page 90) as required. Order GMT fuses as required per Table 16.
3) Order optional Transient Voltage Surge Suppressor (TVSS) Device(s) as required (see page 86).
4) Order battery and load distribution lugs, lug adapters, and lug hardware kits as required per “Standard Crimp Lugs, Special Application Crimp Lugs, and Busbar Adapter Kits and Hardware Kits” on page 94.

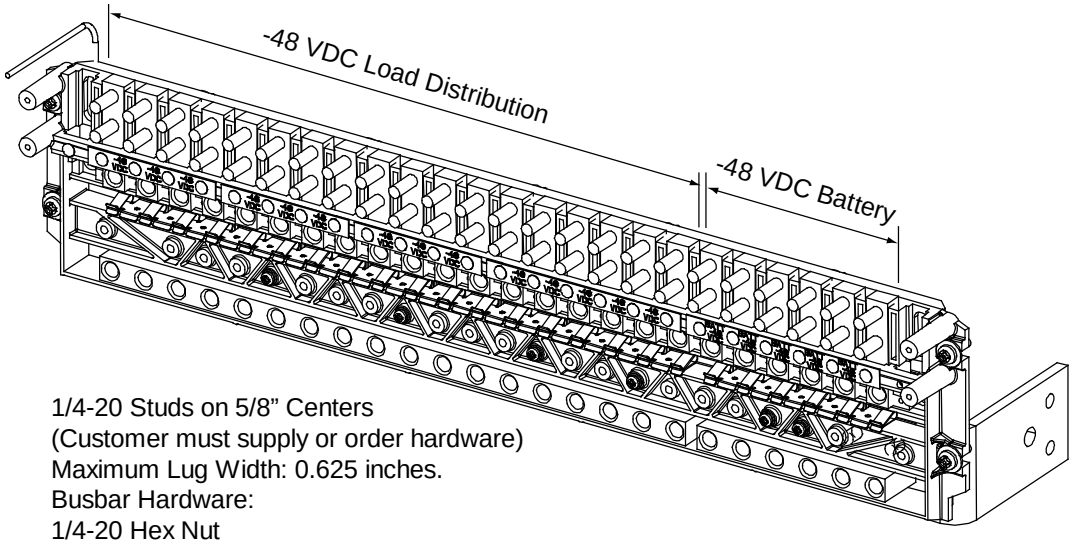

1/4-20 Studs on 5/8” Centers
(Customer must supply or order hardware)
Maximum Lug Width: 0.625 inches.
Busbar Hardware:
1/4-20 Hex Nut
1/4" Lock Washer
1/4" Flat Washer
Recommended Torque: 75 in-lbs.

© 2026 Vertiv Group Corp. All Rights Reserved.

List BB: -48 VDC Load Distribution Plus -48 VDC Battery Disconnect Panel
(6) -48 VDC Bullet/TPS/TLS Circuit Breaker/Fuse Load Positions
(20) -48 VDC Bullet/TPS/TLS Circuit Breaker/Fuse Battery Positions

Features

- (6) -48 VDC Load Distribution Fuse / Circuit Breaker Mounting Positions.
  (20) -48 VDC Battery Distribution Fuse / Circuit Breaker Mounting Positions.
  3 A to 100 A TPS/TLS Type Fuses.
  1 A to 400 A Bullet Nose Type Circuit Breakers.
  Also accepts "Optional 6-Position GMT Distribution Fuse Block".
- Maximum Capacity: 400 A @ 40 °C, 300 A @ 65 °C.

Restrictions

For use in List 26 only.

Must be installed in the bottom row of the List 26 distribution cabinet.

Maximum lug width, 0.625 inches.

See also "Restrictions" under "Bullet Nose Type Circuit Breakers and Bullet Nose Type Fuseholders equipped with TPS/TLS Fuses" on page 87.

Ordering Notes

1) Order fuses and/or circuit breakers as required per "Distribution Devices" on page 87.
   a) Order circuit breakers as required per Table 14.
   b) Order fuses as required per Table 15. Also order one (1) P/N 117201 bullet nose type fuseholder per fuse ordered. Order replacement alarm fuses (18/100 A) per Table 21.
2) List 26: Order 6-position GMT fuse block P/N 559737 for the top row (see page 90) as required.
   Order 6-position GMT fuse block PN 549017 for the bottom row (see page 91) as required.
   Order GMT fuses as required per Table 16.
3) Order optional Transient Voltage Surge Suppressor (TVSS) Device(s) as required (see page 86).
4) Order battery and load distribution lugs, lug adapters, and lug hardware kits as required per "Standard Crimp Lugs, Special Application Crimp Lugs, and Busbar Adapter Kits and Hardware Kits" on page 94.

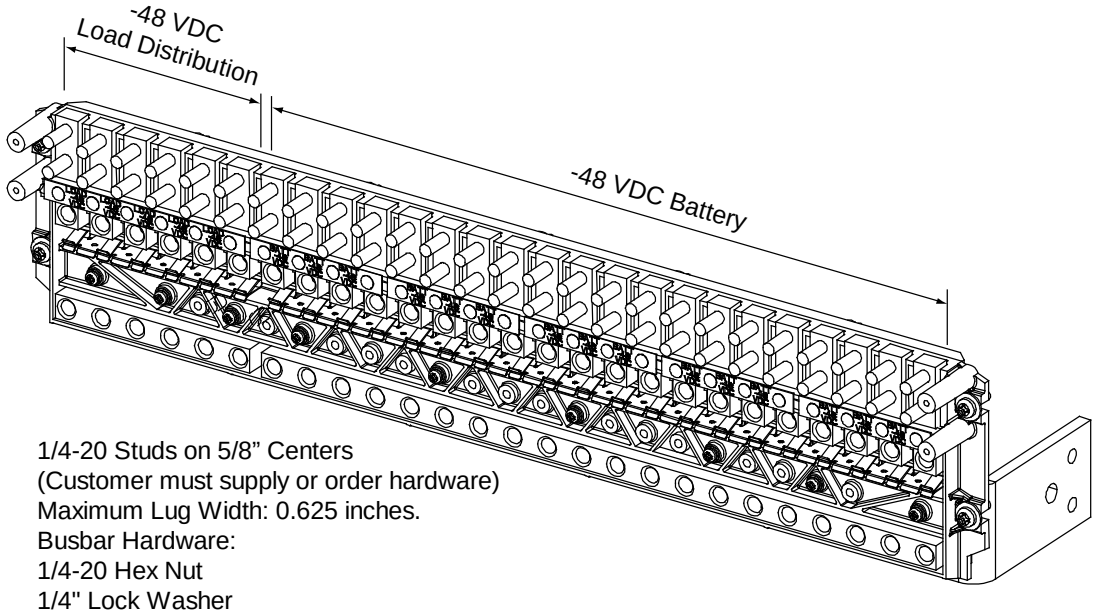

1/4-20 Studs on 5/8" Centers
(Customer must supply or order hardware)
Maximum Lug Width: 0.625 inches.
Busbar Hardware:
1/4-20 Hex Nut
1/4" Lock Washer
1/4" Flat Washer
Recommended Torque: 75 in-lbs.

© 2026 Vertiv Group Corp. All Rights Reserved.

List BC: -48 VDC Load Distribution Plus -48 VDC Battery Disconnect Panel
(16) -48 VDC Bullet/TPS/TLS Circuit Breaker/Fuse Load Positions
(8) -48 VDC Bullet/TPS/TLS Circuit Breaker/Fuse Battery Positions

Features

- (16) -48 VDC Load Distribution Fuse / Circuit Breaker Mounting Positions.
  (8) -48 VDC Battery Distribution Fuse / Circuit Breaker Mounting Positions.
  3 A to 100 A TPS/TLS Type Fuses.
  1 A to 400 A Bullet Nose Type Circuit Breakers.
  Also accepts “Optional 6-Position GMT Distribution Fuse Block”.
- Maximum Capacity: 400 A @ 40 °C, 300 A @ 65 °C.

Restrictions

For use in List 25 only.

Maximum lug width, 0.625 inches.

See also “Restrictions” under “Bullet Nose Type Circuit Breakers and Bullet Nose Type Fuseholders equipped with TPS/TLS Fuses” on page 87.

Ordering Notes

1) Order fuses and/or circuit breakers as required per “Distribution Devices” on page 87.
   a) Order circuit breakers as required per Table 14.
   b) Order fuses as required per Table 15. Also order one (1) P/N 117201 bullet nose type fuseholder per fuse ordered. Order replacement alarm fuses (18/100 A) per Table 21.
2) Order 6-position GMT fuse block P/N 559737 (see page 90) as required. Order GMT fuses as required per Table 16.
3) Order optional Transient Voltage Surge Suppressor (TVSS) Device(s) as required (see page 86).
4) Order battery and load distribution lugs, lug adapters, and lug hardware kits as required per “Standard Crimp Lugs, Special Application Crimp Lugs, and Busbar Adapter Kits and Hardware Kits” on page 94.

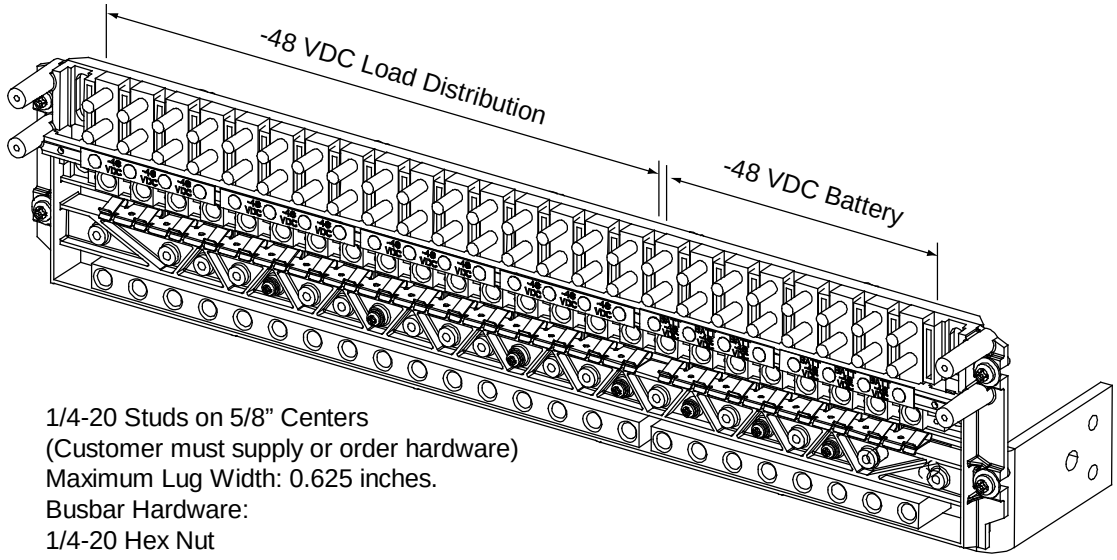

1/4-20 Studs on 5/8” Centers
(Customer must supply or order hardware)
Maximum Lug Width: 0.625 inches.
Busbar Hardware:
1/4-20 Hex Nut
1/4" Lock Washer
1/4" Flat Washer
Recommended Torque: 75 in-lbs.

© 2026 Vertiv Group Corp. All Rights Reserved.

List BD: -48 VDC Load Distribution Plus -48 VDC Battery Disconnect Panel
(16) -48 VDC Bullet/TPS/TLS Circuit Breaker/Fuse Load Positions
(10) -48 VDC Bullet/TPS/TLS Circuit Breaker/Fuse Battery Positions

Features

- (16) -48 VDC Load Distribution Fuse / Circuit Breaker Mounting Positions.
  (10) -48 VDC Battery Distribution Fuse / Circuit Breaker Mounting Positions.
  3 A to 100 A TPS/TLS Type Fuses.
  1 A to 400 A Bullet Nose Type Circuit Breakers.
  Also accepts "Optional 6-Position GMT Distribution Fuse Block".
- Maximum Capacity: 400 A @ 40 °C, 300 A @ 65 °C.

Restrictions

For use in List 26 only.

Must be installed in the bottom row of the List 26 distribution cabinet.

Maximum lug width, 0.625 inches.

See also "Restrictions" under "Bullet Nose Type Circuit Breakers and Bullet Nose Type Fuseholders equipped with TPS/TLS Fuses" on page 87.

Ordering Notes

1) Order fuses and/or circuit breakers as required per "Distribution Devices" on page 87.
   a) Order circuit breakers as required per Table 14.
   b) Order fuses as required per Table 15. Also order one (1) P/N 117201 bullet nose type fuseholder per fuse ordered. Order replacement alarm fuses (18/100 A) per Table 21.
2) List 26: Order 6-position GMT fuse block P/N 559737 for the top row (see page 90) as required.
   Order 6-position GMT fuse block PN 549017 for the bottom row (see page 91) as required.
   Order GMT fuses as required per Table 16.
3) Order optional Transient Voltage Surge Suppressor (TVSS) Device(s) as required (see page 86).
4) Order battery and load distribution lugs, lug adapters, and lug hardware kits as required per "Standard Crimp Lugs, Special Application Crimp Lugs, and Busbar Adapter Kits and Hardware Kits" on page 94.

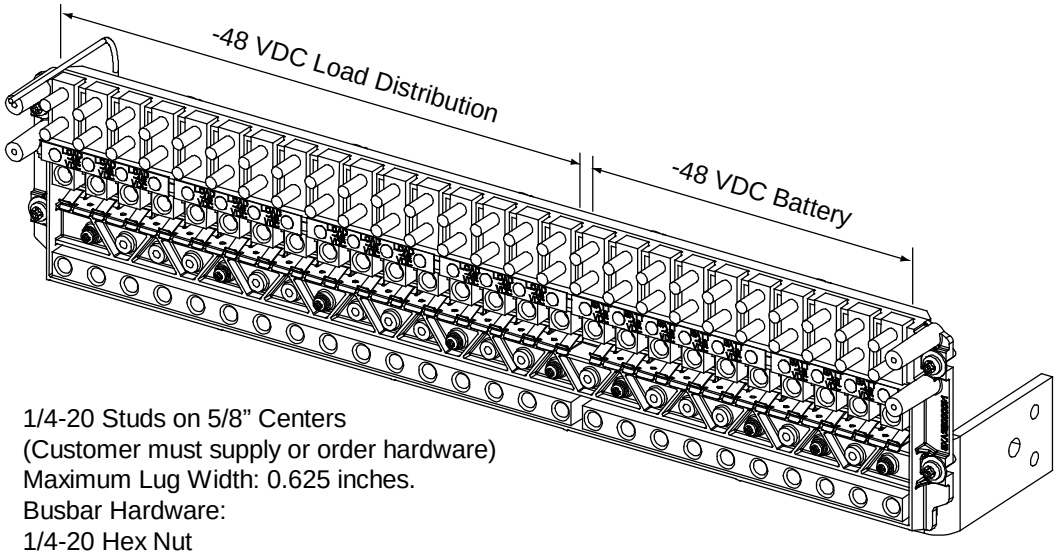

1/4-20 Studs on 5/8" Centers
(Customer must supply or order hardware)
Maximum Lug Width: 0.625 inches.
Busbar Hardware:
1/4-20 Hex Nut
1/4" Lock Washer
1/4" Flat Washer
Recommended Torque: 75 in-lbs.

© 2026 Vertiv Group Corp. All Rights Reserved.

List BN: -48 VDC Load Distribution Plus -48 VDC Battery Disconnect Panel
(14) -48 VDC Bullet/TPS/TLS Circuit Breaker/Fuse Load Positions
(5) -48 VDC Bullet/TPS/TLS Circuit Breaker/Fuse Battery Positions

Features

- (14) -48 VDC Load Distribution Fuse / Circuit Breaker Mounting Positions.
  (5) -48 VDC Battery Distribution Fuse / Circuit Breaker Mounting Positions.
  3 A to 100 A TPS/TLS Type Fuses.
  1 A to 400 A Bullet Nose Type Circuit Breakers.
  Also accepts "Optional 6-Position GMT Distribution Fuse Block".
- Maximum Capacity: 400 A @ 40 °C, 300 A @ 65 °C.

Restrictions

For use in List 20 only.

Maximum lug width, 0.625 inches.

See also "Restrictions" under "Bullet Nose Type Circuit Breakers and Bullet Nose Type Fuseholders equipped with TPS/TLS Fuses" on page 87.

Ordering Notes

1) Order fuses and/or circuit breakers as required per "Distribution Devices" on page 87.
   a) Order circuit breakers as required per Table 14.
   b) Order fuses as required per Table 15. Also order one (1) P/N 117201 bullet nose type fuseholder per fuse ordered. Order replacement alarm fuses (18/100 A) per Table 21.
2) Order 6-position GMT fuse block P/N 559737 (see page 90) as required. Order GMT fuses as required per Table 16.
3) Order optional Transient Voltage Surge Suppressor (TVSS) Device(s) as required (see page 86).
4) Order battery and load distribution lugs, lug adapters, and lug hardware kits as required per "Standard Crimp Lugs, Special Application Crimp Lugs, and Busbar Adapter Kits and Hardware Kits" on page 94.

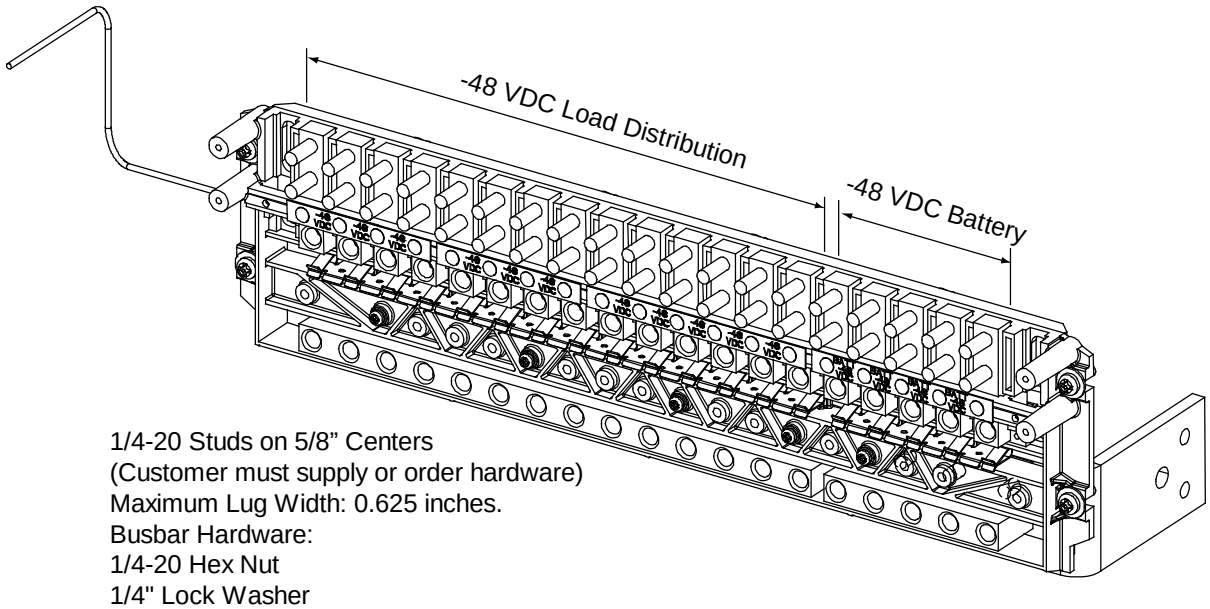

1/4-20 Studs on 5/8" Centers
(Customer must supply or order hardware)
Maximum Lug Width: 0.625 inches.
Busbar Hardware:
1/4-20 Hex Nut
1/4" Lock Washer
1/4" Flat Washer
Recommended Torque: 75 in-lbs.

© 2026 Vertiv Group Corp. All Rights Reserved.

List BO: -48 VDC Load Distribution Plus -48 VDC Battery Disconnect Panel
(12) -48 VDC Bullet/TPS/TLS Circuit Breaker/Fuse Load Positions
(9) -48 VDC Bullet/TPS/TLS Circuit Breaker/Fuse Battery Positions

Features

- (12) -48 VDC Load Distribution Fuse / Circuit Breaker Mounting Positions.
  (9) -48 VDC Battery Distribution Fuse / Circuit Breaker Mounting Positions.
  3 A to 100 A TPS/TLS Type Fuses.
  1 A to 400 A Bullet Nose Type Circuit Breakers.
  Also accepts “Optional 6-Position GMT Distribution Fuse Block”.
- Maximum Capacity: 400 A @ 40 °C, 300 A @ 65 °C.

Restrictions

For use in List 21 only.

Must be installed in the bottom row of the List 21 distribution cabinet.

Maximum lug width, 0.625 inches.

See also “Restrictions” under “Bullet Nose Type Circuit Breakers and Bullet Nose Type Fuseholders equipped with TPS/TLS Fuses” on page 87.

Ordering Notes

1) Order fuses and/or circuit breakers as required per “Distribution Devices” on page 87.
   a) Order circuit breakers as required per Table 14.
   b) Order fuses as required per Table 15. Also order one (1) P/N 117201 bullet nose type fuseholder per fuse ordered. Order replacement alarm fuses (18/100 A) per Table 21.
2) Order 6-position GMT fuse block P/N 559737 for the top row (see page 90) as required.
   Order 6-position GMT fuse block PN 549017 for the bottom row (see page 91) as required.
   Order GMT fuses as required per Table 16.
3) Order optional Transient Voltage Surge Suppressor (TVSS) Device(s) as required (see page 86).
4) Order battery and load distribution lugs, lug adapters, and lug hardware kits as required per “Standard Crimp Lugs, Special Application Crimp Lugs, and Busbar Adapter Kits and Hardware Kits” on page 94.

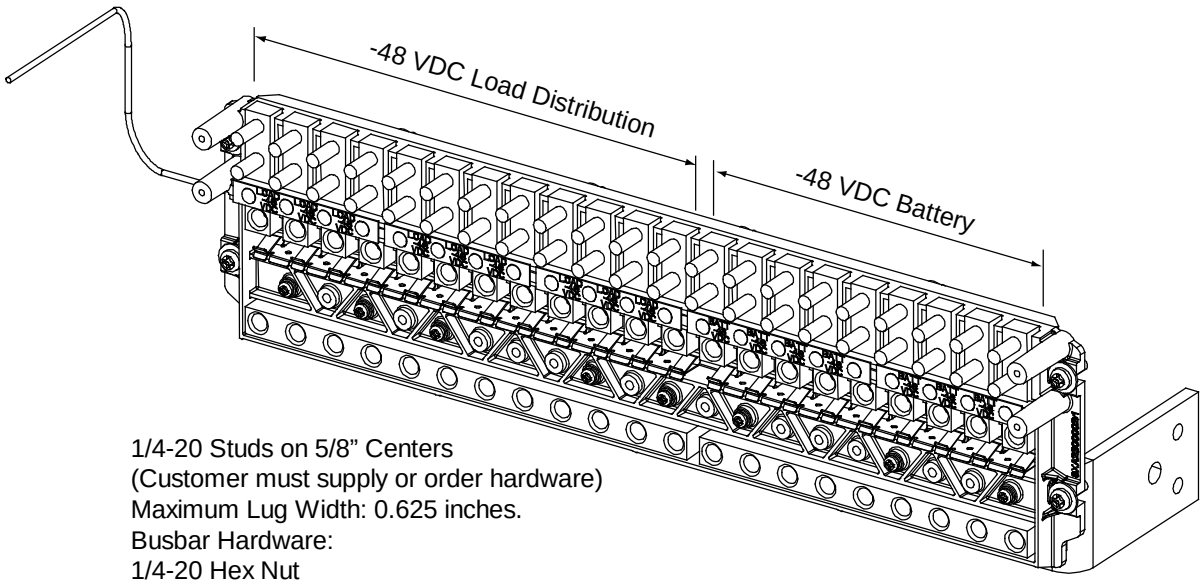

1/4-20 Studs on 5/8” Centers
(Customer must supply or order hardware)
Maximum Lug Width: 0.625 inches.
Busbar Hardware:
1/4-20 Hex Nut
1/4" Lock Washer
1/4" Flat Washer
Recommended Torque: 75 in-lbs.

© 2026 Vertiv Group Corp. All Rights Reserved.

Dual Voltage Load Distribution Panel

List DA: -48 VDC / +24 VDC Load Distribution Panel
(21) -48 VDC Bullet/TPS/TLS Circuit Breaker/Fuse Load Positions
(4) +24 VDC Bullet/TPS/TLS Circuit Breaker/Fuse Load Positions

Features

- (21) -48 VDC Load Distribution Fuse / Circuit Breaker Mounting Positions.
  (4) +24 VDC Load Distribution Fuse / Circuit Breaker Mounting Positions.
  3 A to 100 A TPS/TLS Type Fuses.
  1 A to 400 A Bullet Nose Type Circuit Breakers.
  Also accepts “Optional 6-Position GMT Distribution Fuse Block”.
- 400 A Maximum -48 VDC / +24 VDC Load Distribution Capacity @ 40 °C.
  300 A Maximum -48 VDC / +24 VDC Load Distribution Capacity @ 65 °C.

Restrictions

For use in List 26 only.

Must be installed in the top row of the List 26 distribution cabinet.

Maximum lug width, 0.625 inches.

See also “Restrictions” under “Bullet Nose Type Circuit Breakers and Bullet Nose Type Fuseholders equipped with TPS/TLS Fuses” on page 87.

Ordering Notes

1) Order fuses and/or circuit breakers as required per “Distribution Devices” on page 87.
   a) Order circuit breakers as required per Table 14.
   b) Order fuses as required per Table 15. Also order one (1) P/N 117201 bullet nose type fuseholder per fuse ordered. Order replacement alarm fuses (18/100 A) per Table 21.
2) List 26: Order 6-position GMT fuse block P/N 559737 for the top row (see page 90) as required.
   Order 6-position GMT fuse block PN 549017 for the bottom row (see page 91) as required.
   Order GMT fuses as required per Table 16.
3) Order optional Transient Voltage Surge Suppressor (TVSS) Device(s) as required (see page 86).
4) Order load distribution lugs, lug adapters, and lug hardware kits as required per “Standard Crimp Lugs, Special Application Crimp Lugs, and Busbar Adapter Kits and Hardware Kits” on page 94.

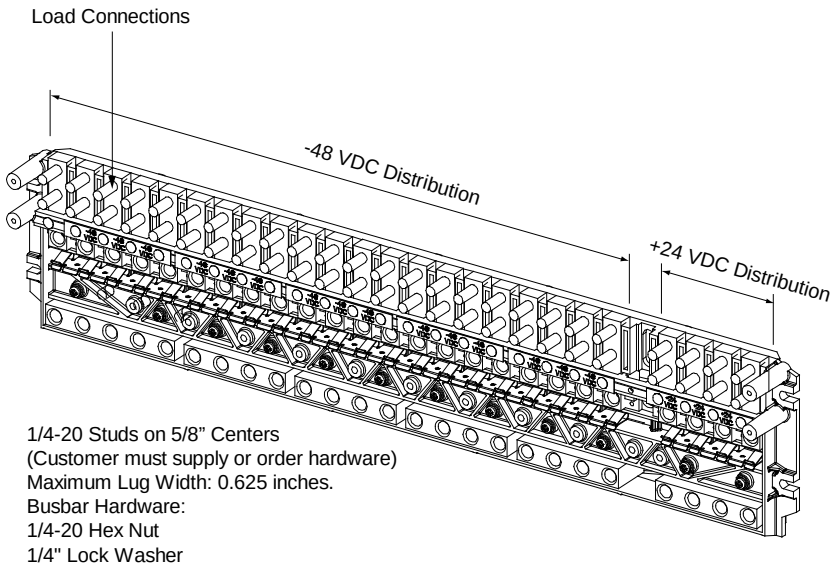

1/4-20 Studs on 5/8” Centers
(Customer must supply or order hardware)
Maximum Lug Width: 0.625 inches.
Busbar Hardware:
1/4-20 Hex Nut
1/4" Lock Washer
1/4" Flat Washer
Recommended Torque: 75 in-lbs.

© 2026 Vertiv Group Corp. All Rights Reserved.

List DB: -48 VDC / +24 VDC Load Distribution Panel
(17) -48 VDC Bullet/TPS/TLS Circuit Breaker/Fuse Load Positions
(8) +24 VDC Bullet/TPS/TLS Circuit Breaker/Fuse Load Positions

Features

- (17) -48 VDC Load Distribution Fuse / Circuit Breaker Mounting Positions.
  (8) +24 VDC Load Distribution Fuse / Circuit Breaker Mounting Positions.
  3 A to 100 A TPS/TLS Type Fuses.
  1 A to 400 A Bullet Nose Type Circuit Breakers.
  Also accepts "Optional 6-Position GMT Distribution Fuse Block".
- 400 A Maximum -48 VDC / +24 VDC Load Distribution Capacity @ 40 °C.
  300 A Maximum -48 VDC / +24 VDC Load Distribution Capacity @ 65 °C.

Restrictions

For use in List 26 only.

Must be installed in the top row of the List 26 distribution cabinet.

Maximum lug width, 0.625 inches.

See also "Restrictions" under "Bullet Nose Type Circuit Breakers and Bullet Nose Type Fuseholders equipped with TPS/TLS Fuses" on page 87.

Ordering Notes

1) Order fuses and/or circuit breakers as required per "Distribution Devices" on page 87.
   a) Order circuit breakers as required per Table 14.
   b) Order fuses as required per Table 15. Also order one (1) P/N 117201 bullet nose type fuseholder per fuse ordered. Order replacement alarm fuses (18/100 A) per Table 21.
2) List 26: Order 6-position GMT fuse block P/N 559737 for the top row (see page 90) as required.
   Order 6-position GMT fuse block PN 549017 for the bottom row (see page 91) as required.
   Order GMT fuses as required per Table 16.
3) Order optional Transient Voltage Surge Suppressor (TVSS) Device(s) as required (see page 86).
4) Order load distribution lugs, lug adapters, and lug hardware kits as required per "Standard Crimp Lugs, Special Application Crimp Lugs, and Busbar Adapter Kits and Hardware Kits" on page 94.

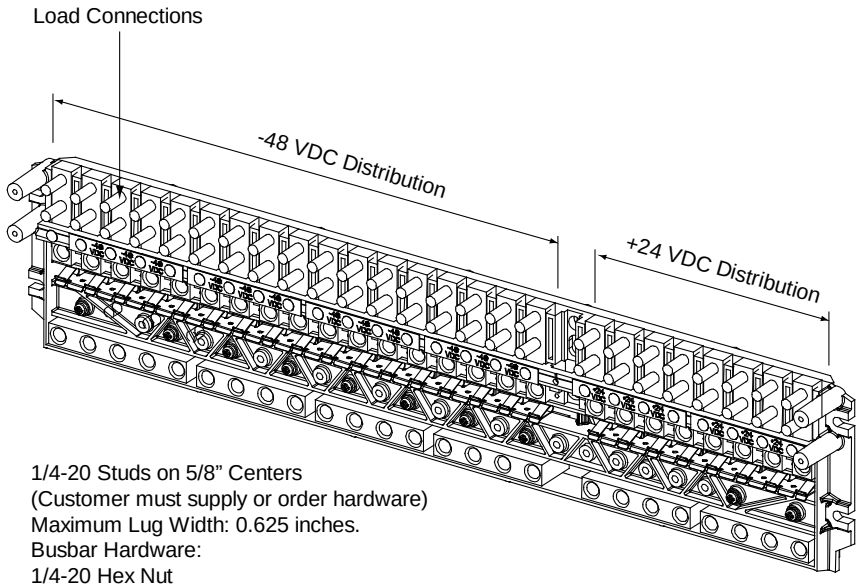

1/4-20 Studs on 5/8" Centers
(Customer must supply or order hardware)
Maximum Lug Width: 0.625 inches.
Busbar Hardware:
1/4-20 Hex Nut
1/4" Lock Washer
1/4" Flat Washer
Recommended Torque: 75 in-lbs.

© 2026 Vertiv Group Corp. All Rights Reserved.

List DC: -48 VDC / +24 VDC Load Distribution Panel
(13) -48 VDC Bullet/TPS/TLS Circuit Breaker/Fuse Load Positions
(12) +24 VDC Bullet/TPS/TLS Circuit Breaker/Fuse Load Positions

Features

- (13) -48 VDC Load Distribution Fuse / Circuit Breaker Mounting Positions.
  (12) +24 VDC Load Distribution Fuse / Circuit Breaker Mounting Positions.
  3 A to 100 A TPS/TLS Type Fuses.
  1 A to 400 A Bullet Nose Type Circuit Breakers.
  Also accepts “Optional 6-Position GMT Distribution Fuse Block”.
- 400 A Maximum -48 VDC / +24 VDC Load Distribution Capacity @ 40 °C.
  300 A Maximum -48 VDC / +24 VDC Load Distribution Capacity @ 65 °C.

Restrictions

For use in List 26 only.

Must be installed in the top row of the List 26 distribution cabinet.

Maximum lug width, 0.625 inches.

See also “Restrictions” under “Bullet Nose Type Circuit Breakers and Bullet Nose Type Fuseholders equipped with TPS/TLS Fuses” on page 87.

Ordering Notes

1) Order fuses and/or circuit breakers as required per “Distribution Devices” on page 87.
   a) Order circuit breakers as required per Table 14.
   b) Order fuses as required per Table 15. Also order one (1) P/N 117201 bullet nose type fuseholder per fuse ordered. Order replacement alarm fuses (18/100 A) per Table 21.
2) List 26: Order 6-position GMT fuse block P/N 559737 for the top row (see page 90) as required.
   Order 6-position GMT fuse block PN 549017 for the bottom row (see page 91) as required.
   Order GMT fuses as required per Table 16.
3) Order optional Transient Voltage Surge Suppressor (TVSS) Device(s) as required (see page 86).
4) Order load distribution lugs, lug adapters, and lug hardware kits as required per “Standard Crimp Lugs, Special Application Crimp Lugs, and Busbar Adapter Kits and Hardware Kits” on page 94.

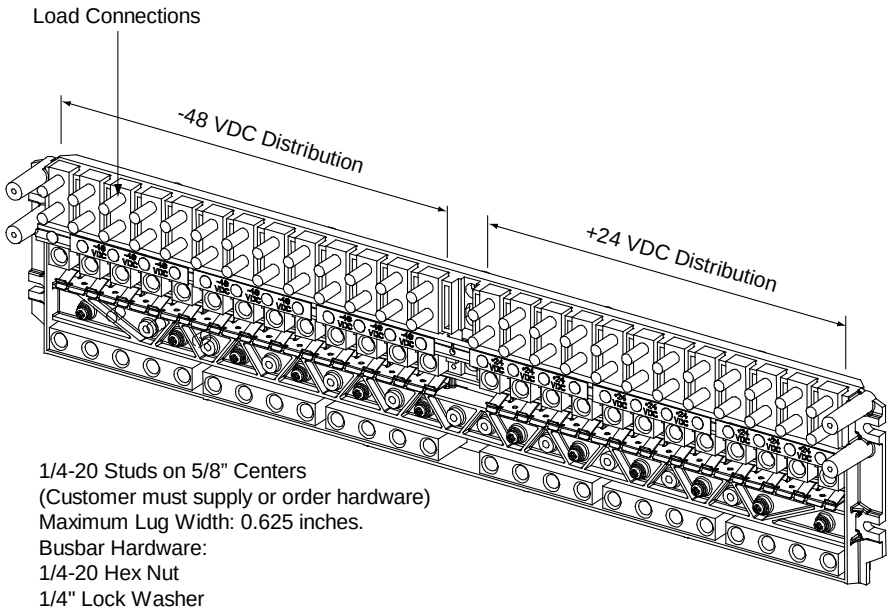

1/4-20 Studs on 5/8” Centers
(Customer must supply or order hardware)
Maximum Lug Width: 0.625 inches.
Busbar Hardware:
1/4-20 Hex Nut
1/4" Lock Washer
1/4" Flat Washer
Recommended Torque: 75 in-lbs.

© 2026 Vertiv Group Corp. All Rights Reserved.

List DD: -48 VDC / +24 VDC Load Distribution Panel
(9) -48 VDC Bullet/TPS/TLS Circuit Breaker/Fuse Load Positions
(16) +24 VDC Bullet/TPS/TLS Circuit Breaker/Fuse Load Positions

Features

- (9) -48 VDC Load Distribution Fuse / Circuit Breaker Mounting Positions.
  (16) +24 VDC Load Distribution Fuse / Circuit Breaker Mounting Positions.
  3 A to 100 A TPS/TLS Type Fuses.
  1 A to 400 A Bullet Nose Type Circuit Breakers.
  Also accepts "Optional 6-Position GMT Distribution Fuse Block".
- 400 A Maximum -48 VDC / +24 VDC Load Distribution Capacity @ 40 °C.
  300 A Maximum -48 VDC / +24 VDC Load Distribution Capacity @ 65 °C.

Restrictions

For use in List 26 only.

Must be installed in the top row of the List 26 distribution cabinet.

Maximum lug width, 0.625 inches.

See also "Restrictions" under "Bullet Nose Type Circuit Breakers and Bullet Nose Type Fuseholders equipped with TPS/TLS Fuses" on page 87.

Ordering Notes

1) Order fuses and/or circuit breakers as required per "Distribution Devices" on page 87.
   a) Order circuit breakers as required per Table 14.
   b) Order fuses as required per Table 15. Also order one (1) P/N 117201 bullet nose type fuseholder per fuse ordered. Order replacement alarm fuses (18/100 A) per Table 21.
2) List 26: Order 6-position GMT fuse block P/N 559737 for the top row (see page 90) as required.
   Order 6-position GMT fuse block PN 549017 for the bottom row (see page 91) as required.
   Order GMT fuses as required per Table 16.
3) Order optional Transient Voltage Surge Suppressor (TVSS) Device(s) as required (see page 86).
4) Order load distribution lugs, lug adapters, and lug hardware kits as required per "Standard Crimp Lugs, Special Application Crimp Lugs, and Busbar Adapter Kits and Hardware Kits" on page 94.

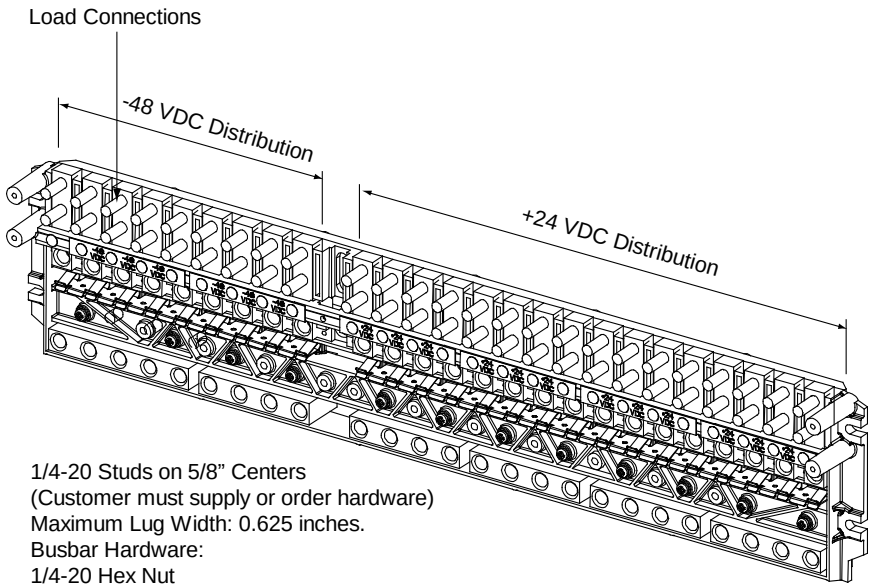

1/4-20 Studs on 5/8" Centers
(Customer must supply or order hardware)
Maximum Lug Width: 0.625 inches.
Busbar Hardware:
1/4-20 Hex Nut
1/4" Lock Washer
1/4" Flat Washer
Recommended Torque: 75 in-lbs.

© 2026 Vertiv Group Corp. All Rights Reserved.

List DE: -48 VDC / +24 VDC Load Distribution Panel
(5) -48 VDC Bullet/TPS/TLS Circuit Breaker/Fuse Load Positions
(20) +24 VDC Bullet/TPS/TLS Circuit Breaker/Fuse Load Positions

Features

- (5) -48 VDC Load Distribution Fuse / Circuit Breaker Mounting Positions.
  (20) +24 VDC Load Distribution Fuse / Circuit Breaker Mounting Positions.
  3 A to 100 A TPS/TLS Type Fuses.
  1 A to 400 A Bullet Nose Type Circuit Breakers.
  Also accepts “Optional 6-Position GMT Distribution Fuse Block”.
- 400 A Maximum -48 VDC / +24 VDC Load Distribution Capacity @ 40 °C.
  300 A Maximum -48 VDC / +24 VDC Load Distribution Capacity @ 65 °C.

Restrictions

For use in List 26 only.

Must be installed in the top row of the List 26 distribution cabinet.

Maximum lug width, 0.625 inches.

See also “Restrictions” under “Bullet Nose Type Circuit Breakers and Bullet Nose Type Fuseholders equipped with TPS/TLS Fuses” on page 87.

Ordering Notes

1) Order fuses and/or circuit breakers as required per “Distribution Devices” on page 87.
   a) Order circuit breakers as required per Table 14.
   b) Order fuses as required per Table 15. Also order one (1) P/N 117201 bullet nose type fuseholder per fuse ordered. Order replacement alarm fuses (18/100 A) per Table 21.
2) List 26: Order 6-position GMT fuse block P/N 559737 for the top row (see page 90) as required.
   Order 6-position GMT fuse block PN 549017 for the bottom row (see page 91) as required.
   Order GMT fuses as required per Table 16.
3) Order optional Transient Voltage Surge Suppressor (TVSS) Device(s) as required (see page 86).
4) Order load distribution lugs, lug adapters, and lug hardware kits as required per “Standard Crimp Lugs, Special Application Crimp Lugs, and Busbar Adapter Kits and Hardware Kits” on page 94.

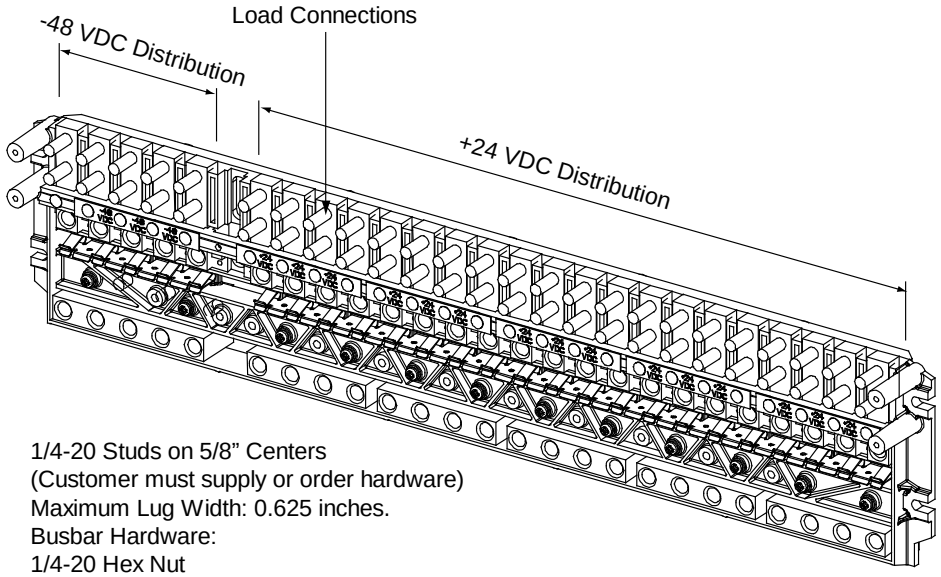

1/4-20 Studs on 5/8” Centers
(Customer must supply or order hardware)
Maximum Lug Width: 0.625 inches.
Busbar Hardware:
1/4-20 Hex Nut
1/4" Lock Washer
1/4" Flat Washer
Recommended Torque: 75 in-lbs.

© 2026 Vertiv Group Corp. All Rights Reserved.

List DF: -48 VDC / +24 VDC Load Distribution Panel
(26) -48 VDC Bullet/TPS/TLS Circuit Breaker/Fuse Load Positions
(4) Positions Can Be Converted from -48 VDC to +24 VDC Positions in the Field

Features

- (26) -48 VDC Load Distribution Fuse / Circuit Breaker Mounting Positions.
  (4) Positions Can Be Converted from -48 VDC to +24 VDC Positions in the Field.
  3 A to 100 A TPS/TLS Type Fuses.
  1 A to 400 A Bullet Nose Type Circuit Breakers.
  Also accepts "Optional 6-Position GMT Distribution Fuse Block".

Restrictions

For use in List 27 only.

Charge Ratings:
-48 VDC; 600 A and +24 VDC; 63 A; -48 VDC Battery Re-Charge; 195 A at 40 °C.
-48 VDC; 525 A and +24 VDC; 50 A; -48 VDC Battery Re-Charge; 120 A at 65 °C.
Discharge Ratings:
-48 VDC; 771 A at 40 °C.
-48 VDC; 600 A at 65 °C.

Bulk Output Rating:
-48 VDC; 300 A @ 40 °C and 65 °C. The Bulk Output current value used in the end use application is to be subtracted from the available current of the -48 VDC charge ratings.

List 27 cannot be ordered with Lists LL or List LB.

List 27 is only for use with List DF.

Maximum lug width, 0.625 inches.

See also "Restrictions" under "Bullet Nose Type Circuit Breakers and Bullet Nose Type Fuseholders equipped with TPS/TLS Fuses" on page 87.

Ordering Notes

1) Order fuses and/or circuit breakers as required per "Distribution Devices" on page 87.
   a) Order circuit breakers as required per Table 14.
   b) Order fuses as required per Table 15. Also order one (1) P/N 117201 bullet nose type fuseholder per fuse ordered. Order replacement alarm fuses (18/100 A) per Table 21.
2) Order 6-position GMT fuse block P/N 559737 (see page 90) as required.
   Order GMT fuses as required per Table 16.
3) Order optional Transient Voltage Surge Suppressor (TVSS) Device(s) as required (see page 86).
4) Order load distribution lugs, lug adapters, and lug hardware kits as required per "Standard Crimp Lugs, Special Application Crimp Lugs, and Busbar Adapter Kits and Hardware Kits" on page 94.

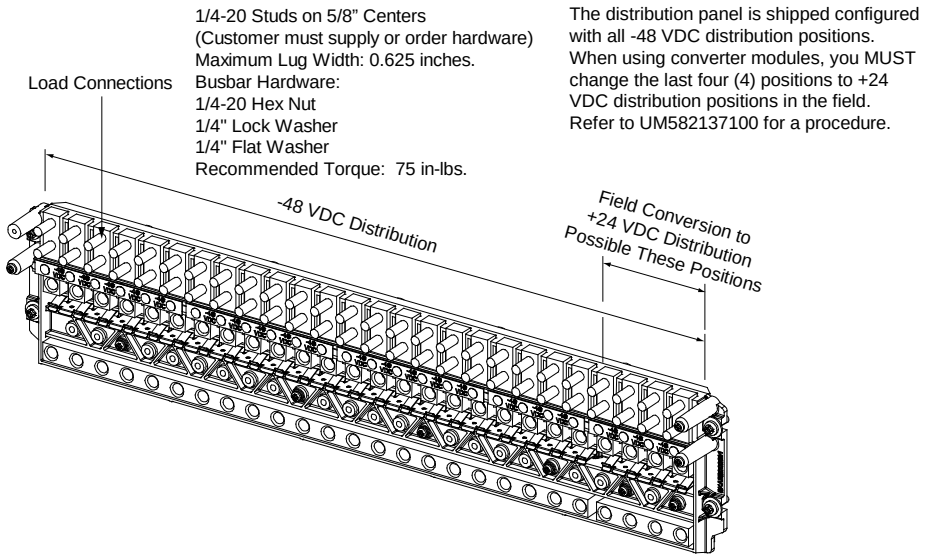

© 2026 Vertiv Group Corp. All Rights Reserved.

List FA: -48 VDC / -58 VDC Load Distribution Panel
(22) -48 VDC Bullet/TPS/TLS Circuit Breaker/Fuse Load Positions
(4) -58 VDC Bullet/TPS/TLS Circuit Breaker/Fuse Load Positions

Features

- (22) -48 VDC Load Distribution Fuse / Circuit Breaker Mounting Positions.
  (4) -58 VDC Load Distribution Fuse / Circuit Breaker Mounting Positions.
  3 A to 100 A TPS/TLS Type Fuses.
  1 A to 400 A Bullet Nose Type Circuit Breakers.
  Also accepts "Optional 6-Position GMT Distribution Fuse Block".
- 400 A Maximum -48 VDC / 340 A Maximum -58 VDC Maximum Load Distribution Capacity @ 40 °C.
  300 A Maximum -48 VDC / 270 A Maximum -58 VDC Maximum Load Distribution Capacity @ 65 °C.

Restrictions

For use in List 26 only.

Must be installed in the top row of the List 26 distribution cabinet.

Maximum lug width, 0.625 inches.

See also "Restrictions" under "Bullet Nose Type Circuit Breakers and Bullet Nose Type Fuseholders equipped with TPS/TLS Fuses" on page 87.

Ordering Notes

1) Order fuses and/or circuit breakers as required per "Distribution Devices" on page 87.
   a) Order circuit breakers as required per Table 14.
   b) Order fuses as required per Table 15. Also order one (1) P/N 117201 bullet nose type fuseholder per fuse ordered. Order replacement alarm fuses (18/100 A) per Table 21.
2) List 26: Order 6-position GMT fuse block P/N 559737 for the top row (see page 90) as required.
   Order 6-position GMT fuse block PN 549017 for the bottom row (see page 91) as required.
   Order GMT fuses as required per Table 16.
3) Order optional Transient Voltage Surge Suppressor (TVSS) Device(s) as required (see page 86).
4) Order load distribution lugs, lug adapters, and lug hardware kits as required per "Standard Crimp Lugs, Special Application Crimp Lugs, and Busbar Adapter Kits and Hardware Kits" on page 94.

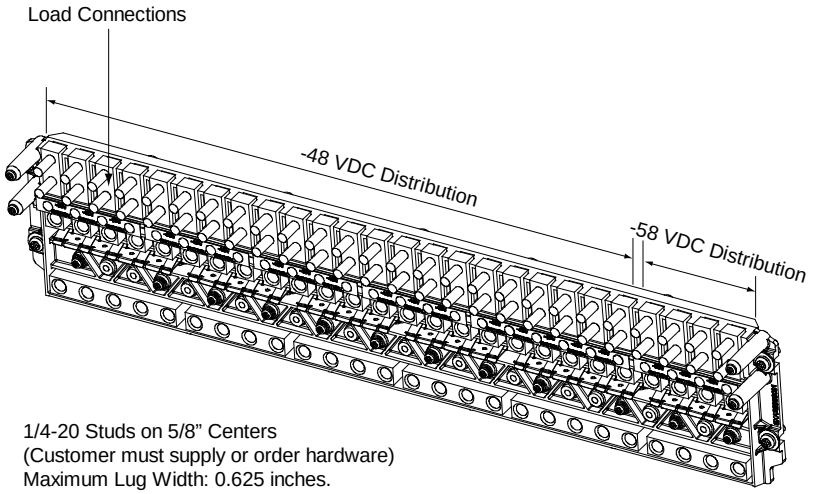

1/4-20 Studs on 5/8" Centers
(Customer must supply or order hardware)
Maximum Lug Width: 0.625 inches.
Busbar Hardware:
1/4-20 Hex Nut
1/4" Lock Washer
1/4" Flat Washer
Recommended Torque: 75 in-lbs.

© 2026 Vertiv Group Corp. All Rights Reserved.

List FB: -48 VDC / -58 VDC Load Distribution Panel
(18) -48 VDC Bullet/TPS/TLS Circuit Breaker/Fuse Load Positions
(8) -58 VDC Bullet/TPS/TLS Circuit Breaker/Fuse Load Positions

Features

- (18) -48 VDC Load Distribution Fuse / Circuit Breaker Mounting Positions.
  (8) -58 VDC Load Distribution Fuse / Circuit Breaker Mounting Positions.
  3 A to 100 A TPS/TLS Type Fuses.
  1 A to 400 A Bullet Nose Type Circuit Breakers.
  Also accepts “Optional 6-Position GMT Distribution Fuse Block”.
- 400 A Maximum -48 VDC / 340 A Maximum -58 VDC Maximum Load Distribution Capacity @ 40 °C.
  300 A Maximum -48 VDC / 270 A Maximum -58 VDC Maximum Load Distribution Capacity @ 65 °C.

Restrictions

For use in List 26 only.

Must be installed in the top row of the List 26 distribution cabinet.

Maximum lug width, 0.625 inches.

See also “Restrictions” under “Bullet Nose Type Circuit Breakers and Bullet Nose Type Fuseholders equipped with TPS/TLS Fuses” on page 87.

Ordering Notes

1) Order fuses and/or circuit breakers as required per “Distribution Devices” on page 87.
   a) Order circuit breakers as required per Table 14.
   b) Order fuses as required per Table 15. Also order one (1) P/N 117201 bullet nose type fuseholder per fuse ordered. Order replacement alarm fuses (18/100 A) per Table 21.
2) List 26: Order 6-position GMT fuse block P/N 559737 for the top row (see page 90) as required.
   Order 6-position GMT fuse block PN 549017 for the bottom row (see page 91) as required.
   Order GMT fuses as required per Table 16.
3) Order optional Transient Voltage Surge Suppressor (TVSS) Device(s) as required (see page 86).
4) Order load distribution lugs, lug adapters, and lug hardware kits as required per “Standard Crimp Lugs, Special Application Crimp Lugs, and Busbar Adapter Kits and Hardware Kits” on page 94.

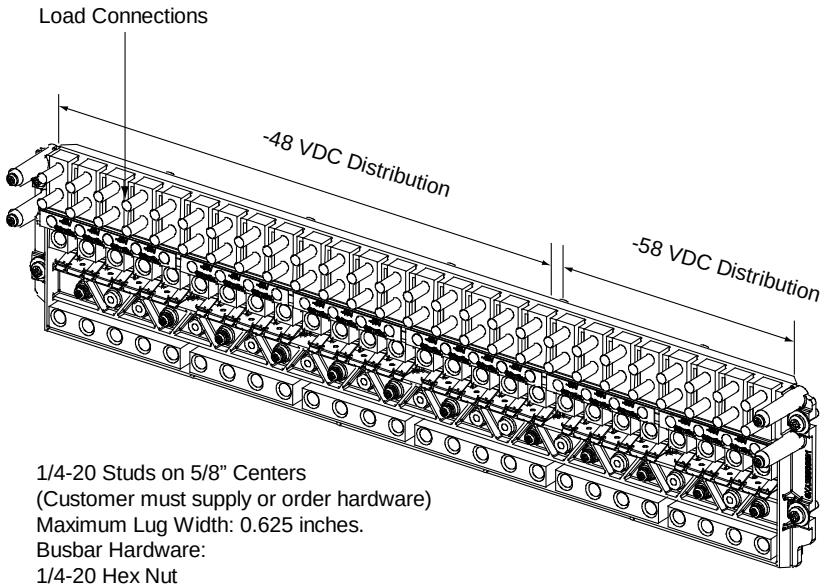

1/4-20 Studs on 5/8” Centers
(Customer must supply or order hardware)
Maximum Lug Width: 0.625 inches.
Busbar Hardware:
1/4-20 Hex Nut
1/4" Lock Washer
1/4" Flat Washer
Recommended Torque: 75 in-lbs.

© 2026 Vertiv Group Corp. All Rights Reserved.

List FC: -48 VDC / -58 VDC Load Distribution Panel
(14) -48 VDC Bullet/TPS/TLS Circuit Breaker/Fuse Load Positions
(12) -58 VDC Bullet/TPS/TLS Circuit Breaker/Fuse Load Positions

Features

- (14) -48 VDC Load Distribution Fuse / Circuit Breaker Mounting Positions.
  (12) -58 VDC Load Distribution Fuse / Circuit Breaker Mounting Positions.
  3 A to 100 A TPS/TLS Type Fuses.
  1 A to 400 A Bullet Nose Type Circuit Breakers.
  Also accepts “Optional 6-Position GMT Distribution Fuse Block”.
- 400 A Maximum -48 VDC / 340 A Maximum -58 VDC Maximum Load Distribution Capacity @ 40 °C.
  300 A Maximum -48 VDC / 270 A Maximum -58 VDC Maximum Load Distribution Capacity @ 65 °C.

Restrictions

For use in List 26 only.

Must be installed in the top row of the List 26 distribution cabinet.

Maximum lug width, 0.625 inches.

See also “Restrictions” under “Bullet Nose Type Circuit Breakers and Bullet Nose Type Fuseholders equipped with TPS/TLS Fuses” on page 87.

Ordering Notes

1) Order fuses and/or circuit breakers as required per “Distribution Devices” on page 87.
   a) Order circuit breakers as required per Table 14.
   b) Order fuses as required per Table 15. Also order one (1) P/N 117201 bullet nose type fuseholder per fuse ordered. Order replacement alarm fuses (18/100 A) per Table 21.
2) List 26: Order 6-position GMT fuse block P/N 559737 for the top row (see page 90) as required.
   Order 6-position GMT fuse block PN 549017 for the bottom row (see page 91) as required.
   Order GMT fuses as required per Table 16.
3) Order optional Transient Voltage Surge Suppressor (TVSS) Device(s) as required (see page 86).
4) Order load distribution lugs, lug adapters, and lug hardware kits as required per “Standard Crimp Lugs, Special Application Crimp Lugs, and Busbar Adapter Kits and Hardware Kits” on page 94.

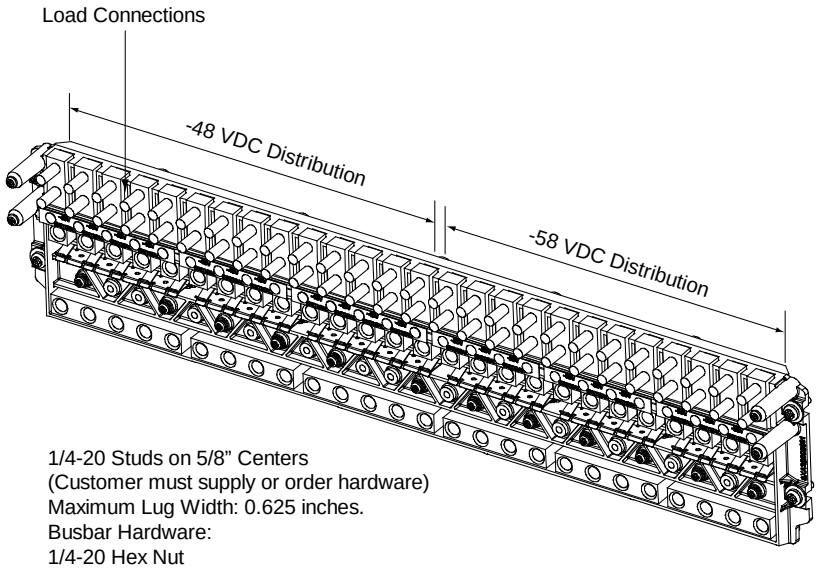

1/4-20 Studs on 5/8” Centers
(Customer must supply or order hardware)
Maximum Lug Width: 0.625 inches.
Busbar Hardware:
1/4-20 Hex Nut
1/4" Lock Washer
1/4" Flat Washer
Recommended Torque: 75 in-lbs.

© 2026 Vertiv Group Corp. All Rights Reserved.

List FD: -48 VDC / -58 VDC Load Distribution Panel
(10) -48 VDC Bullet/TPS/TLS Circuit Breaker/Fuse Load Positions
(16) -58 VDC Bullet/TPS/TLS Circuit Breaker/Fuse Load Positions

Features

- (10) -48 VDC Load Distribution Fuse / Circuit Breaker Mounting Positions.
  (16) -58 VDC Load Distribution Fuse / Circuit Breaker Mounting Positions.
  3 A to 100 A TPS/TLS Type Fuses.
  1 A to 400 A Bullet Nose Type Circuit Breakers.
  Also accepts “Optional 6-Position GMT Distribution Fuse Block”.
- 400 A Maximum -48 VDC / 340 A Maximum -58 VDC Maximum Load Distribution Capacity @ 40 °C.
  300 A Maximum -48 VDC / 270 A Maximum -58 VDC Maximum Load Distribution Capacity @ 65 °C.

Restrictions

For use in List 26 only.

Must be installed in the top row of the List 26 distribution cabinet.

Maximum lug width, 0.625 inches.

See also “Restrictions” under “Bullet Nose Type Circuit Breakers and Bullet Nose Type Fuseholders equipped with TPS/TLS Fuses” on page 87.

Ordering Notes

1) Order fuses and/or circuit breakers as required per “Distribution Devices” on page 87.
   a) Order circuit breakers as required per Table 14.
   b) Order fuses as required per Table 15. Also order one (1) P/N 117201 bullet nose type fuseholder per fuse ordered. Order replacement alarm fuses (18/100 A) per Table 21.
2) List 26: Order 6-position GMT fuse block P/N 559737 for the top row (see page 90) as required.
   Order 6-position GMT fuse block PN 549017 for the bottom row (see page 91) as required.
   Order GMT fuses as required per Table 16.
3) Order optional Transient Voltage Surge Suppressor (TVSS) Device(s) as required (see page 86).
4) Order load distribution lugs, lug adapters, and lug hardware kits as required per “Standard Crimp Lugs, Special Application Crimp Lugs, and Busbar Adapter Kits and Hardware Kits” on page 94.

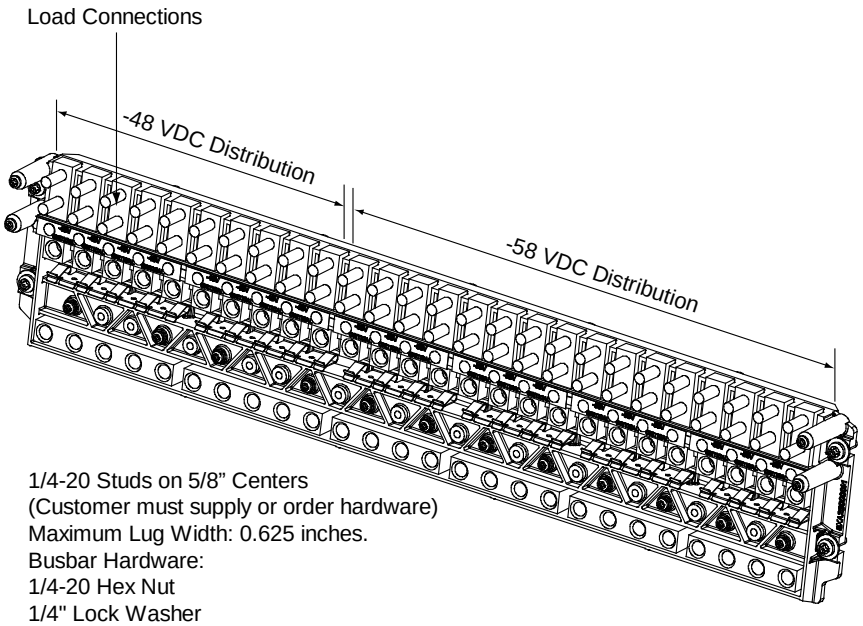

1/4-20 Studs on 5/8” Centers
(Customer must supply or order hardware)
Maximum Lug Width: 0.625 inches.
Busbar Hardware:
1/4-20 Hex Nut
1/4" Lock Washer
1/4" Flat Washer
Recommended Torque: 75 in-lbs.

© 2026 Vertiv Group Corp. All Rights Reserved.

List FE: -48 VDC / -58 VDC Load Distribution Panel
(6) -48 VDC Bullet/TPS/TLS Circuit Breaker/Fuse Load Positions
(20) -58 VDC Bullet/TPS/TLS Circuit Breaker/Fuse Load Positions

Features

- (6) -48 VDC Load Distribution Fuse / Circuit Breaker Mounting Positions.
  (20) -58 VDC Load Distribution Fuse / Circuit Breaker Mounting Positions.
  3 A to 100 A TPS/TLS Type Fuses.
  1 A to 400 A Bullet Nose Type Circuit Breakers.
  Also accepts “Optional 6-Position GMT Distribution Fuse Block”.
- 400 A Maximum -48 VDC / 340 A Maximum -58 VDC Maximum Load Distribution Capacity @ 40 °C.
  300 A Maximum -48 VDC / 270 A Maximum -58 VDC Maximum Load Distribution Capacity @ 65 °C.

Restrictions

For use in List 26 only.

Must be installed in the top row of the List 26 distribution cabinet.

Maximum lug width, 0.625 inches.

See also “Restrictions” under “Bullet Nose Type Circuit Breakers and Bullet Nose Type Fuseholders equipped with TPS/TLS Fuses” on page 87.

Ordering Notes

1) Order fuses and/or circuit breakers as required per “Distribution Devices” on page 87.
   a) Order circuit breakers as required per Table 14.
   b) Order fuses as required per Table 15. Also order one (1) P/N 117201 bullet nose type fuseholder per fuse ordered. Order replacement alarm fuses (18/100 A) per Table 21.
2) List 26: Order 6-position GMT fuse block P/N 559737 for the top row (see page 90) as required.
   Order 6-position GMT fuse block PN 549017 for the bottom row (see page 91) as required.
   Order GMT fuses as required per Table 16.
3) Order optional Transient Voltage Surge Suppressor (TVSS) Device(s) as required (see page 86).
4) Order load distribution lugs, lug adapters, and lug hardware kits as required per “Standard Crimp Lugs, Special Application Crimp Lugs, and Busbar Adapter Kits and Hardware Kits” on page 94.

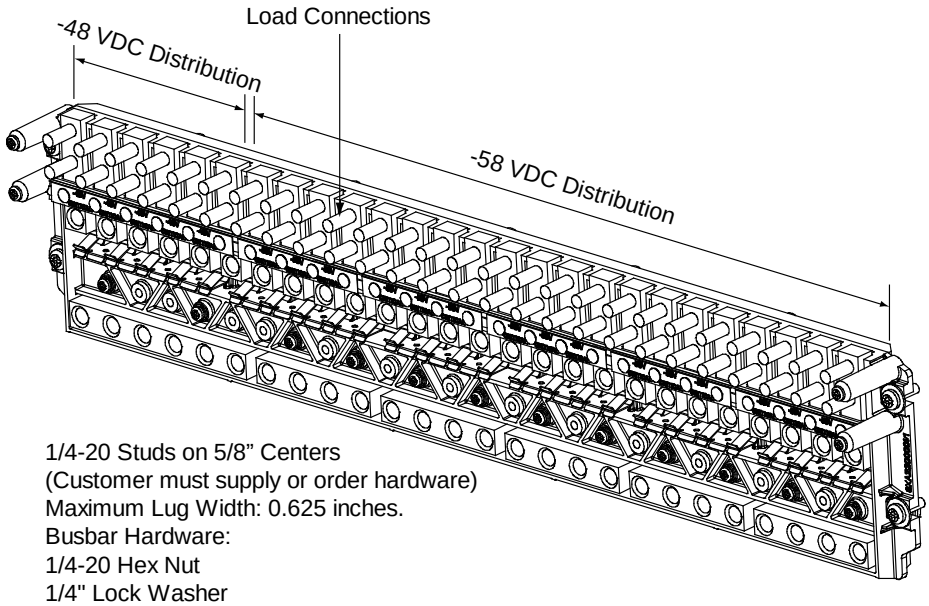

1/4-20 Studs on 5/8” Centers
(Customer must supply or order hardware)
Maximum Lug Width: 0.625 inches.
Busbar Hardware:
1/4-20 Hex Nut
1/4" Lock Washer
1/4" Flat Washer
Recommended Torque: 75 in-lbs.

© 2026 Vertiv Group Corp. All Rights Reserved.

List FF: -58 VDC Load Distribution Panel
(26) -58 VDC Bullet/TPS/TLS Circuit Breaker/Fuse Load Positions

Features

- (26) -58 VDC Load Distribution Fuse / Circuit Breaker Mounting Positions.
  3 A to 100 A TPS/TLS Type Fuses.
  1 A to 400 A Bullet Nose Type Circuit Breakers.
  Also accepts “Optional 6-Position GMT Distribution Fuse Block”.
- 340 A Maximum -58 VDC Maximum Load Distribution Capacity @ 40 °C.
  270 A Maximum -58 VDC Maximum Load Distribution Capacity @ 65 °C.

Restrictions

For use in List 26 only.

Must be installed in the top row of the List 26 distribution cabinet.

Maximum lug width, 0.625 inches.

See also “Restrictions” under “Bullet Nose Type Circuit Breakers and Bullet Nose Type Fuseholders equipped with TPS/TLS Fuses” on page 87.

Ordering Notes

1) Order fuses and/or circuit breakers as required per “Distribution Devices” on page 87.
   a) Order circuit breakers as required per Table 14.
   b) Order fuses as required per Table 15. Also order one (1) P/N 117201 bullet nose type fuseholder per fuse ordered. Order replacement alarm fuses (18/100 A) per Table 21.
2) Order 6-position GMT fuse block P/N 559737 (see page 90) as required.
   Order GMT fuses as required per Table 16.
3) Order optional Transient Voltage Surge Suppressor (TVSS) Device(s) as required (see page 86).
4) Order load distribution lugs, lug adapters, and lug hardware kits as required per “Standard Crimp Lugs, Special Application Crimp Lugs, and Busbar Adapter Kits and Hardware Kits” on page 94.

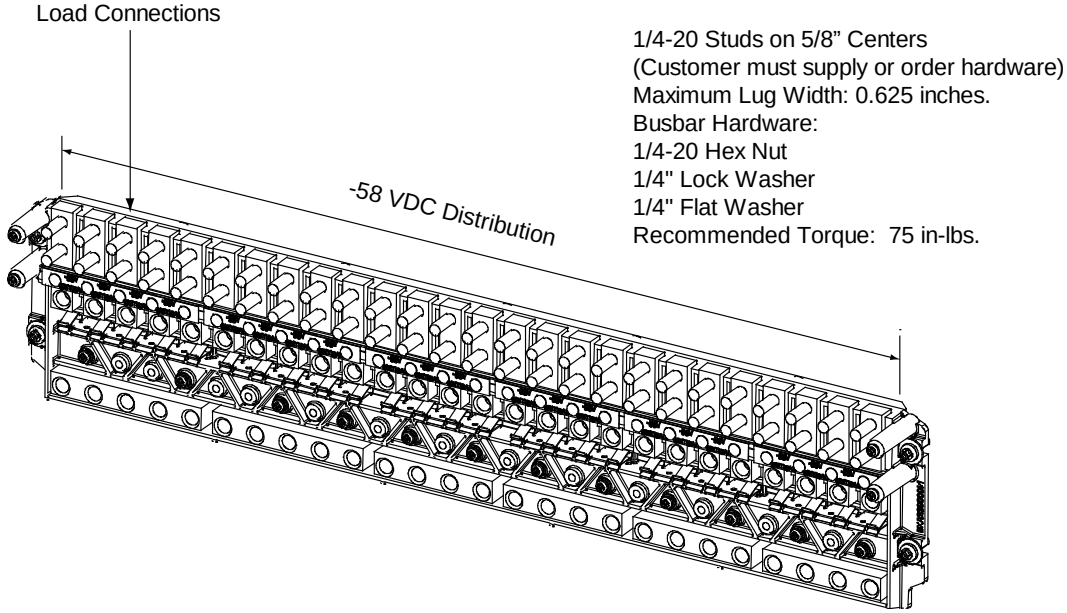

© 2026 Vertiv Group Corp. All Rights Reserved.

List GB: -58 VDC Load Distribution Panel (Bottom Row)
(26) -58 VDC Bullet/TPS/TLS Circuit Breaker/Fuse Load Positions

Features

- (26) -58 VDC Load Distribution Fuse / Circuit Breaker Mounting Positions.
  3 A to 100 A TPS/TLS Type Fuses.
  1 A to 400 A Bullet Nose Type Circuit Breakers.
  Also accepts “Optional 6-Position GMT Distribution Fuse Block”.
- 340 A Maximum -58 VDC Maximum Load Distribution Capacity @ 40 °C.
  270 A Maximum -58 VDC Maximum Load Distribution Capacity @ 65 °C.

Restrictions

For use in List 26 only.

Must be installed in the bottom row of the List 26 distribution cabinet.

The List GB cannot be used with List DA-DF in the top row.

Cannot be used with the inverter system (List 50-List 57).

Maximum lug width, 0.625 inches.

See also “Restrictions” under “Bullet Nose Type Circuit Breakers and Bullet Nose Type Fuseholders equipped with TPS/TLS Fuses” on page 87.

Ordering Notes

1) Order fuses and/or circuit breakers as required per “Distribution Devices” on page 87.
   a) Order circuit breakers as required per Table 14.
   b) Order fuses as required per Table 15. Also order one (1) P/N 117201 bullet nose type fuseholder per fuse ordered. Order replacement alarm fuses (18/100 A) per Table 21.
2) Order 6-position GMT fuse block P/N 549017 (see page 91) as required.
   Order GMT fuses as required per Table 16.
3) Order optional Transient Voltage Surge Suppressor (TVSS) Device(s) as required (see page 86).
4) Order load distribution lugs, lug adapters, and lug hardware kits as required per “Standard Crimp Lugs, Special Application Crimp Lugs, and Busbar Adapter Kits and Hardware Kits” on page 94.

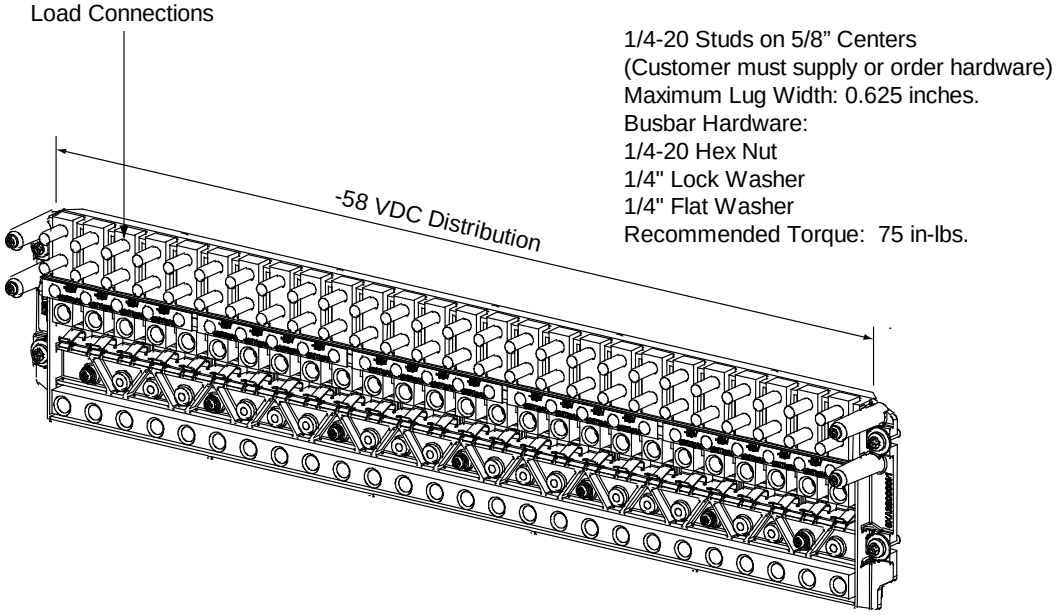

© 2026 Vertiv Group Corp. All Rights Reserved.

Low Voltage Disconnect Options

List LB: Low Voltage Battery Disconnect (LVBD)

Features

- Adds low voltage battery disconnect (LVBD) to the distribution cabinet.
- Provides a battery disconnect contactor mounted inside the distribution cabinet.

Restrictions

Cannot be use in List 27.

Ordering Notes

1) Order if low voltage battery disconnect (LVBD) is required in the distribution cabinet.

List LL: Low Voltage Load Disconnect (LVLD)

Features

- Adds low voltage load disconnect (LVLD) to the distribution cabinet.
- Provides a load disconnect contactor mounted inside the distribution cabinet.

Restrictions

Cannot be use in List 27.

Restrictions

Contactor disconnects -48V or -58 V loads only in bottom row only. Contactor does not disconnect loads in top row.

Ordering Notes

1) Order if low voltage load disconnect (LVLD) is required in the distribution cabinet.

© 2026 Vertiv Group Corp. All Rights Reserved.

ACCESSORY DESCRIPTIONS

Relay Racks

Features

- The system is factory mounted in the relay rack specified when ordered.
- Relay racks are 19" or 23" (see Table 13) standard mounting.

Ordering Notes

1) Order from relay racks listed in Table 13.

Part Number	Size	Available Mounting Positions (1RU = 1-3/4")	Notes
23" Relay Racks			
559818	72.000"H x 24.375"W x 15"D	37RU	Welded
562353	84.000"H x 25.800"W x 18"D	45RU	Seismic (Note 1)
559820	84.000"H x 24.375"W x 15"D	45RU	Welded
559821	90.000"H x 24.375"W x 15"D	48RU	Welded
559822	96.000"H x 24.375"W x 15"D	51RU	Welded
10009902	84.000"H x 25.800"W x 18"D	45RU	Seismic (Note 2)
19" Relay Racks			
559824	84.000"H x 21.000"W x 15"D	45RU	Welded
559823	84.000"H x 20.375"W x 15"D	45RU	Seismic (Note 1)

Note 1: *Complies with Bellcore Seismic Zone 4 requirements.*

Note 2: *Complies with Bellcore Seismic Zone 4 requirements, per FEA Analysis.*

Table 13
Available Relay Racks

Relay Rack Isolation Kit

Features

- Provides electrical isolation of the relay rack from the concrete floor. Includes an insulating pad, four (4) insulating bushings, and four (4) flat washers to be used with the anchors used to mount the relay rack to the floor.

Ordering Notes

1) Order P/N 10019125 for a Relay Rack Isolation Kit to be used with 23" seismic relay rack P/N 562353 or P/N 10009902.

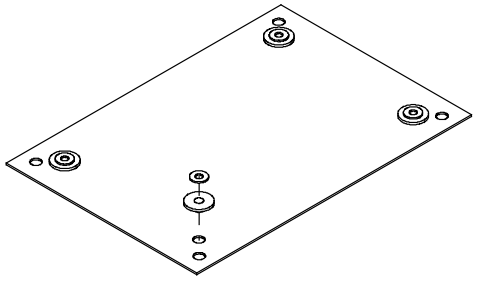

10019125

© 2026 Vertiv Group Corp. All Rights Reserved.

Earthquake Kit, 19” Flush Mounting

P/N 559801

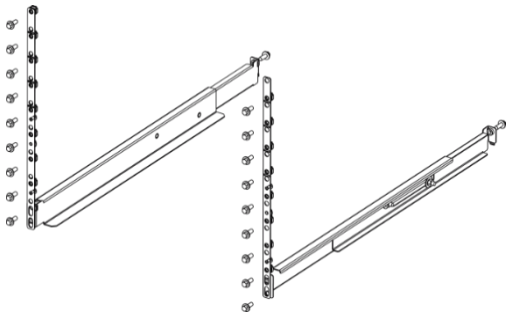

Features

- Adds strength when flush mounting the system in 19” mounting rails of a compliant data cabinet.
- Mounts to the inside surfaces of the data cabinet’s vertical rails.
- Adjustable Depth: from 26.0 in [660 mm] to 30.0 in [762 mm].
- Weight Load: 160 lbs.
- Mounting hardware included.

Restrictions

For use with 19" systems only.

Ordering Notes

1) Order P/N 559801 as required.

Special Mounting Bracket Kit

P/N 564300

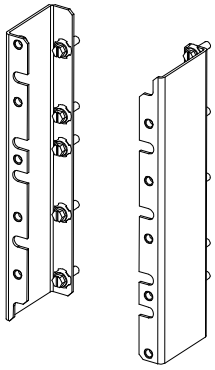

Features

- Mounting bracket kit to allow a system configuration consisting of a single row distribution panel and a single rectifier shelf to be mounted in an older style Western Electric relay rack with a maximum of 7-3/4" from the front side of the rack to the back of the system. All necessary hardware is provided for mounting.

Restrictions

For use with 1" center to center mounting relay racks only.

Ordering Notes

1) Order P/N 564300 as required.

19” to 23” Wide Relay Rack Mounting Bracket Kit

P/N 553630

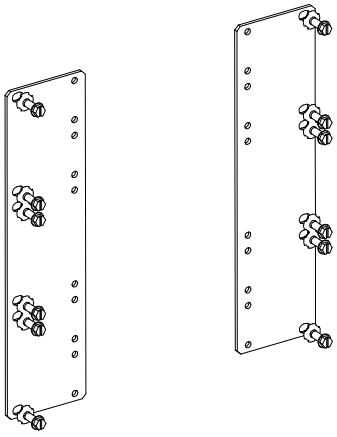

Features

- Allows mounting of a 6RU system consisting of a 19” wide 1-row distribution cabinet (582137100 List 20) and two (2) 19” wide module mounting assemblies (588705300) in a 23” wide relay rack.
- Mounting hardware included.
- Field installed.

Ordering Notes

1) Order P/N 553630 as required.

© 2026 Vertiv Group Corp. All Rights Reserved.

Door Kits

19" Wide, 1-Row Cabinet Door Kit P/N 10010292

Features

- Provides a front door and door grounding strap.
- Field installable.

Restrictions

For use with List 20.

Ordering Notes

1) Order P/N 10010292 if desired to install a front door on a 19" wide, 1-row cabinet (List 20) in the field.

19" Wide, 2-Row Cabinet Door Kit P/N 10010293

Features

- Provides a front door and door grounding strap.
- Field installable.

Restrictions

For use with List 21.

Ordering Notes

1) Order P/N 10010293 if desired to install a front door on a 19" wide, 2-row cabinet (List 21) in the field.

23" Wide, 1-Row Cabinet Door Kit P/N 10010294

Features

- Provides a front door and door grounding strap.
- Field installable.

Restrictions

For use with List 25 and 27.

Ordering Notes

1) Order P/N 10010294 if desired to install a front door on a 23" wide, 1-row cabinet (List 25, 27) in the field.

23" Wide, 2-Row Cabinet Door Kit P/N 10010295

Features

- Provides a front door and door grounding strap.
- Field installable.

Restrictions

For use with List 26.

Ordering Notes

1) Order P/N 10010295 if desired to install a front door on a 23" wide, 2-row cabinet (List 26) in the field.

© 2026 Vertiv Group Corp. All Rights Reserved.

Controller

NCU (NetSure Control Unit) Controller, P/N 1M830BNA

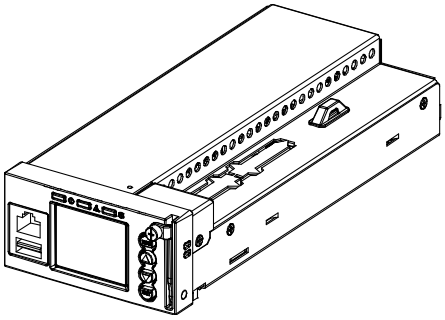

Features

- Provides the NCU Controller, Model M830B (Spec. No. 1M830BNA).
- Factory programmed with the configuration file required for the system configuration ordered.

  Note: *For custom NCU configurations, contact Vertiv.*

Restrictions

Only one (1) controller per power system is required.

For use in Spec. No. 588705300 module mounting assembly. See PD588705300.

Ordering Notes

1) Order one (1) NCU controller per power system, P/N 1M830BNA.
2) Order the EIB controller extended interface board as required per List 70 (see page 39).
3) Order the optional IB5 (second Ethernet port) board kit P/N 559741 as required (see page 78).
4) Order up to four (4) optional temperature probes for ambient and battery temperature monitoring, as required. The temperature probe(s) may also be used for the battery charge temperature compensation feature and BTRM (Battery Thermal Runaway Management). Refer to “Optional Temperature Probes” on page 79 for additional information.
5) Order RS485 Modbus interface cable as required (see page 78).
6) Order optional supervisory modules as desired (shipped loose).
   - SM-TEMP (Supervisory Module for Temperature Probes).

     Note: *A system can have up to (8) SM-Temp modules for a total of sixty-eight (68) temperature probes that can be used in the power system for ambient and battery monitoring.*
7) Ordering an NCU for replacing an NCU or as a spare NCU.

   If the NCU is to be used as a replacement in a specific system it should be ordered with the same configuration file as the original NCU controller. This is identified by a six digit number. If the controller part number ends with a six digit number, for example, 1M830BNA559242, the configuration file number is the last six characters. If the part number does not have these characters, the configuration file number can be found on the controller nameplate – “Programmed with Configuration File ######”. The controller may also have a Unique Identification Number (UIN). This number indicates that certain parameters were set at the factory to match the controller to the options selected with the power plant (such as low voltage disconnect, load and battery shunt ratings, etc.). If the controller has a UIN, the plant will have shipped with a USB drive labelled with the UIN. The UIN label may also be located near the controller slot in the system. If the controller has a UIN, provide this UIN number, along with the configuration number, when ordering so that the new controller will match that of the original controller shipped with the system. The user manual provided with the controller provides instructions for replacing and programming the controller. It is important to follow these instructions carefully. The user manual also provides instructions for saving certain controller files that are created when changes are made to the system after leaving the factory. These files can be programmed into the replacement controller so it can match the latest saved state of the original controller.

   If the NCU is being ordered as a spare part for any of a group of power plants, the same procedure can be followed. If the replacement controller’s configuration does not match that of the original controller, the original files can be retrieved from the USB drive shipped with the plant, if available. If the USB drive is not available, contact the factory or technical assistance center to obtain a copy of the original configuration file (all package) so it can be programmed into the new controller.

   The NCU programming files are unique to the NCU. Files from an SCU+ or ACU+ are not compatible with the NCU and MUST NOT BE loaded into an NCU.

© 2026 Vertiv Group Corp. All Rights Reserved.

Optional NCU Controller 2nd Ethernet Port Kit, P/N 559741

Features

- Provides the IB5 board with a second Ethernet port. The Ethernet port located on the NCU Controller's front panel can be used to connect a computer directly to the NCU. The Ethernet port located on the IB5 board can be used to connect the NCU to your Local Area Network (LAN).

  Note: *IB5 boards with a 10M/100M/1G Ethernet port replaced IB4 boards with a 10M/100M Ethernet port. This transition enables the support of connected devices that communicate up to 1G. While both boards are physically interchangeable, the IB5 board does require the NCU to have V1.2.80 or higher software loaded.*

Ordering Notes

1) If a second Ethernet port is required, order kit P/N 559741.

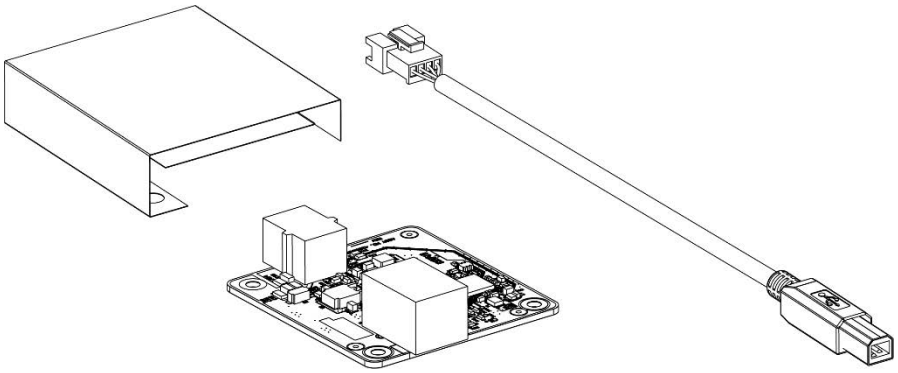

Optional RS485 Modbus Interface Cable, P/N 564643

Features

- Provides a 4' long cable terminated at one end with a mating connector to the system's RS485 NorthBound Modbus connector and unterminated at the other end.

Ordering Notes

1) Order as required.

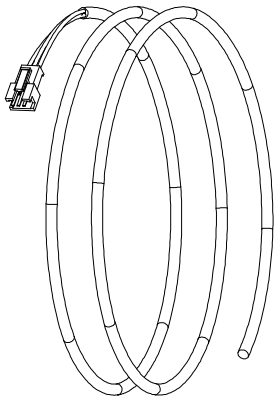

© 2026 Vertiv Group Corp. All Rights Reserved.

Optional Temperature Probes

Features

- Up to two (2) temperature probes can be connected to the IB2 (Controller Interface Board). Up to two (2) additional temperature probes can be connected to the EIB (Controller Extended Interface Board). Any combination of the four (4) temperature probes can be programmed to monitor ambient temperature and/or battery temperature. A temperature probe set to monitor battery temperature can also be used for the rectifier battery charge temperature compensation feature, or the battery charge temperature compensation feature can be programmed to use the average or highest value of all battery temperature probes. The battery charge temperature compensation feature allows the controller to automatically increase or decrease the output voltage of the system to maintain battery float current as battery temperature decreases or increases, respectively. Battery life can be extended when an optimum charge voltage to the battery with respect to temperature is maintained. A temperature probe set to monitor battery temperature can also be used for the BTRM (Battery Thermal Runaway Management) feature. The BTRM feature lowers output voltage when a high temperature condition exists to control against battery thermal runaway.
- The temperature sensor end of the probe contains a tab with a 5/16" clearance hole for mounting.
- Temperature probes can also be used with the optional SM-Temp Temperature Concentrator.

Restrictions

A temperature probe programmed to monitor battery temperature should be mounted on the negative post of a battery cell to sense battery temperature. A temperature probe used for battery charge temperature compensation and/or BTRM (Battery Thermal Runaway Management) should also be mounted on the negative post of a battery cell. A temperature probe programmed to monitor ambient temperature should be mounted in a convenient location, away from direct sources of heat or cold.

Ordering Notes

1) Order temperature probes as required. Note that each temperature probe consists of two pieces which plug together to make a complete probe (see the following illustration). For a complete temperature probe, order one (1) P/N 552992 (10.3 meters) or one (1) P/N 556155 (3.3 meters). If additional length is required, order temperature probe extension cable P/N 04119122 (10 meters).
2) If more probes are desired, order one or more SM-Temp Temperature Concentrator, P/N 547490.
See Optional SM-Temp Temperature Concentrator on page 80.

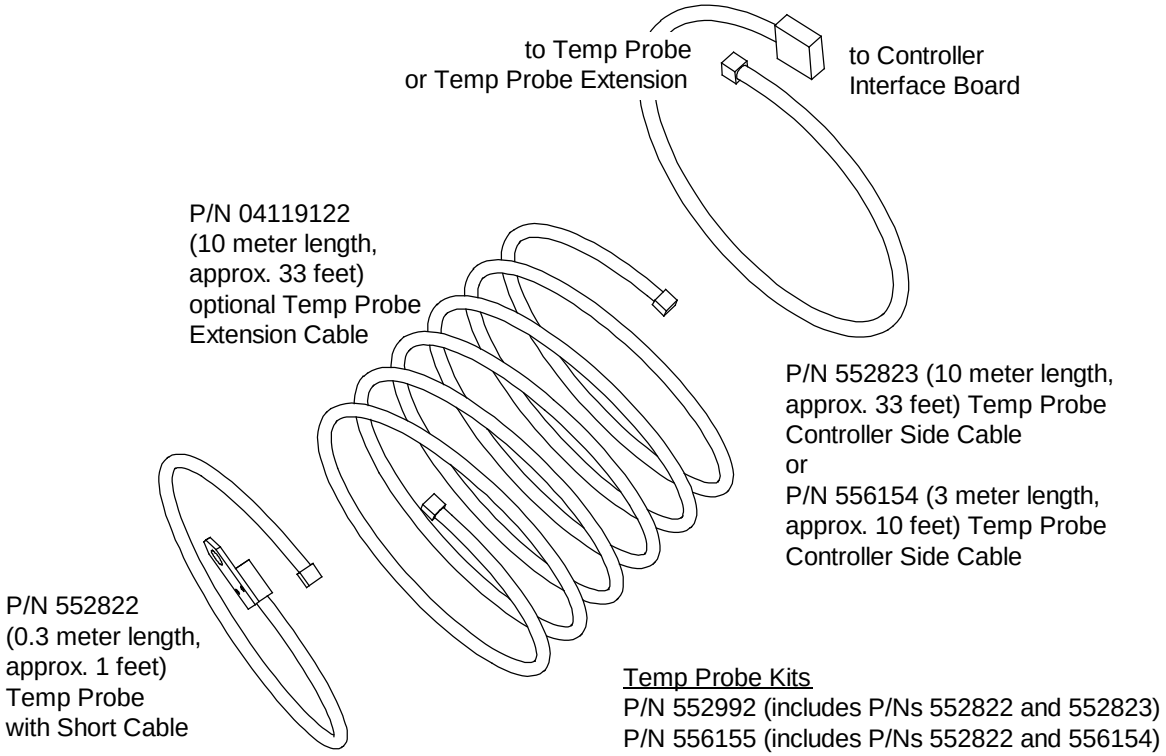

© 2026 Vertiv Group Corp. All Rights Reserved.

Optional SM-Temp Temperature Concentrator, P/N 547490

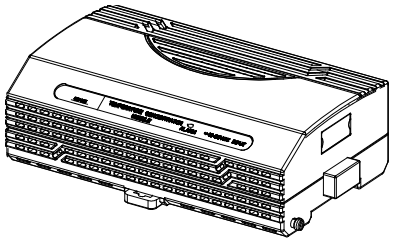

Features

- Allows for multiple temperature probes to be used for ambient temperature monitoring, battery temperature monitoring, temperature compensation, and/or BTRM (Battery Thermal Runaway Management).
- Provides (8) temperature probe inputs per SM-Temp unit.
- Can cascade up to (8) SM-Temp units, connecting up to sixty-four (64) temperature probes.
- The SM-Temp Concentrator is connected at the end of the NCU CAN bus. Via the CAN Bus, the NCU reads each temperature probe from each SM-Temp Concentrator.
- Refer to the SM-Temp Temperature Concentrator instructions (UM547490) for more information.

Ordering Notes

1) Order SM-Temp Temperature Concentrator, P/N 547490, as required.
2) Order up to eight (8) temperature probes for each concentrator. See “Optional Temperature Probes” on page 79.
3) Order one (1) SM-Temp CAN bus interface cable, P/N 562868, to connect the SM-Temp into the controller’s CAN bus.
4) Order SM-Temp jumpers, P/N 552888, to interconnect SM-Temp units as required.

SM-Temp Jumpers, P/N 552888

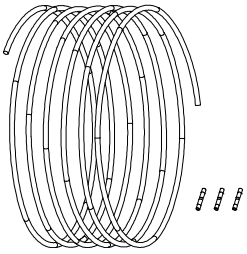

Features

- Provides 20’ of 18 AWG solid red / black twisted pair cable and three (3) wire splices for connecting the CAN bus of multiple SM-Temp modules together.

Ordering Notes

- Order P/N 552888 as required.

Alarm and Digital Input Cables

Features

- Two sets of alarm and digital input cables are available, each set consisting of two pieces that plug together to make a complete set. One set for the digital inputs and another set for the relay outputs. One half of each set connects to a controller interface circuit card (IB2 or EIB) in the distribution cabinet. The other half of each set is unterminated on one end for connection to customer circuits.
- A custom digital input cable kit is available (see ordering notes below).

Ordering Notes

1) For a relay output alarm cable, order both P/Ns 541308 (3’ controller interface circuit card side) and P/N 541309 (10’ customer side), or P/N 545644 (50’ customer side), or P/N 563870 (100’ customer side).

   For a digital input alarm cable, order both P/Ns 541310 (3’ controller interface circuit card side) and P/N 541311 (10’ customer side)

Note: *In the fourth quarter of 2026, P/Ns 541308, 541309, 545644, 563870, 541310, and 541311 were updated. As a result of the reduction in pairs, the color code changed, and additional cables were added and bundled together. The color code is the same in each bundled cable. Each cable is labeled with a specific letter to allow identification of the correct wires. See the illustrations on the next pages for cable information prior to and after the fourth quarter of 2026.*

2) A custom digital input cable and internal wiring kit is available, P/N 563752. This kit is factory installed only. (Provides -48 VDC pre-wired to the negative side of digital inputs #2 through #8 and a 10’ alarm cable factory wired to the positive side of digital inputs #2 through #8).

© 2026 Vertiv Group Corp. All Rights Reserved.

Custom Digital Input Alarm Cable

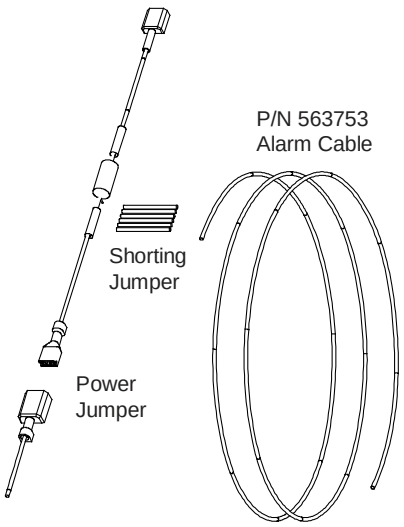

P/N 563752 (Custom Kit)

Relay Output Alarm Cable Prior to the Fourth Quarter of 2026

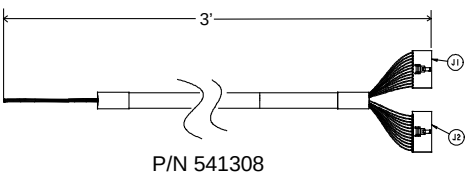

P/N 541308
Controller Interface Side

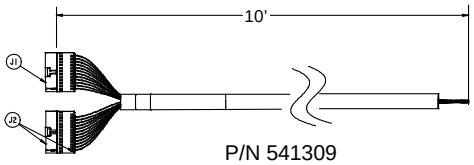

P/N 541309
Customer Side

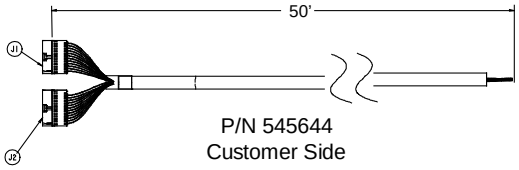

P/N 545644
Customer Side

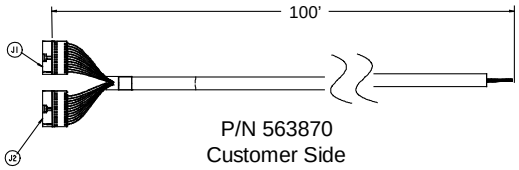

P/N 563870
Customer Side

Digital Input Alarm Cable Prior to the Fourth Quarter of 2026

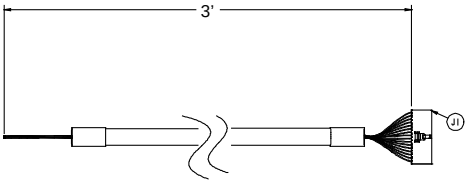

P/N 541310
Controller Interface Side

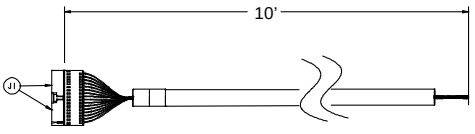

P/N 541311
Customer Side

© 2026 Vertiv Group Corp. All Rights Reserved.

Relay Output Alarm Cable after the Fourth Quarter of 2026

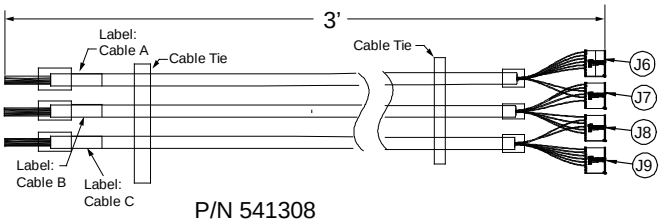

P/N 541308

Controller Interface Side

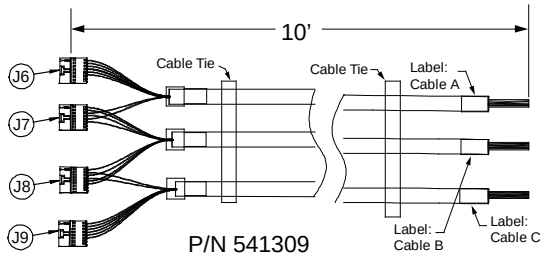

P/N 541309

Customer Side

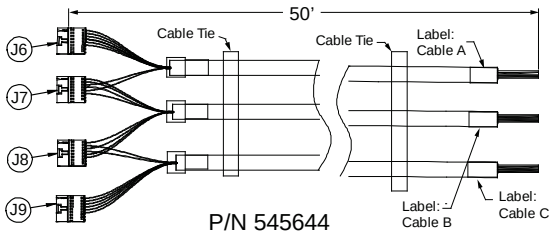

P/N 545644

Customer Side

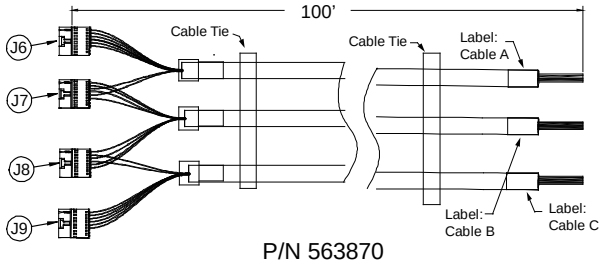

P/N 563870

Customer Side

Digital Input Alarm Cable after the Fourth Quarter of 2026

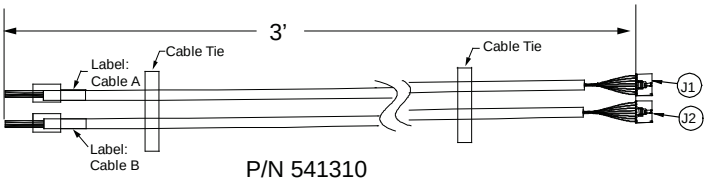

P/N 541310

Controller Interface Side

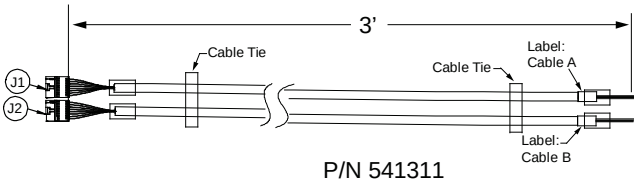

P/N 541311

Customer Side

© 2026 Vertiv Group Corp. All Rights Reserved.

Critical Alarm Indicator Kit, P/N 555877

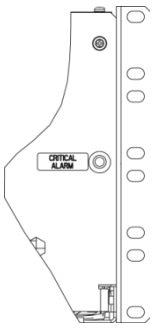

Features

- Provides an alarm indicator visible from the front of the distribution cabinet which illuminates if the NCU issues a critical alarm.

Restrictions

Requires List 70 EIB (Controller Extended Interface Board).

Ordering Notes

1) Order by P/N 555877 as required.

Rectifier Module

Rectifier Module, P/N 1R482000E3

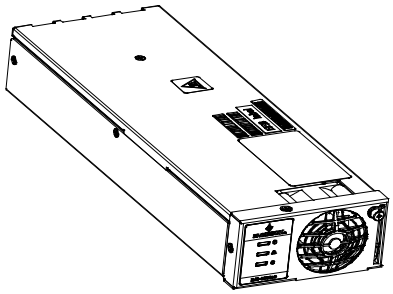

Features

- Model R48-2000e3 (Spec. No. 1R482000E3) 2000 W / -48 VDC rectifier module.
- Refer to the Rectifier Instructions (UM1R482000E3) for more information.

Restrictions

For use in Spec. No. 588705300 module mounting assembly.

Ordering Notes

1) Order by P/N 1R482000E3 as required.

Solar Converter Module

Solar Converter Module, P/N 1S482000E3

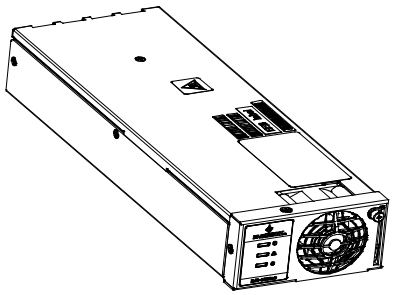

Features

- Model S48-2000e3 (Spec. No. 1S482000E3) 2000 W / -48 VDC solar converter module.
- Refer to the Solar Converter Instructions (UM1S482000E3) for more information.

Restrictions

For use in Spec. No. 588705300 module mounting assembly.

Ordering Notes

1) Order by P/N 1S482000E3 as required.

Converter Module

-48 VDC to +24 VDC Converter Module, P/N 1C48241500

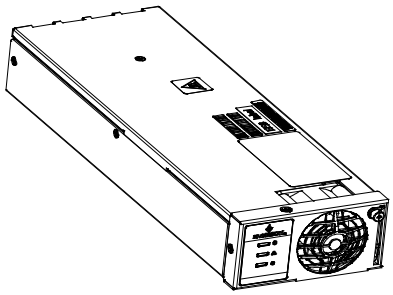

Features

- Model C48/24-1500 (Spec. No. 1C48241500) 1500 W / -48 VDC to +24 VDC converter module.
- Refer to the Converter Instructions (UM1C48241500) for more information.

Restrictions

For use in Spec. No. 588705300 module mounting assembly.

Ordering Notes

1) Order by P/N 1C48241500 as required.

© 2026 Vertiv Group Corp. All Rights Reserved.

-48 VDC to -58 VDC Converter Module, P/N 1C48582000P3

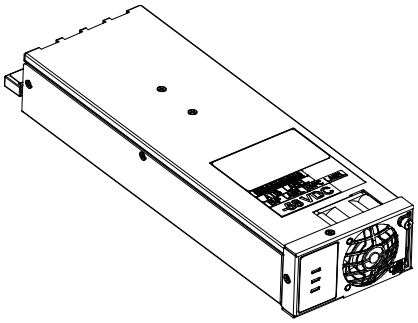

Features

- Model C48/58-2000P3 (Spec. No. 1C48582000P3) 2000 W / -48 VDC to -58 VDC converter module.
- Refer to the Converter Instructions (UM1C48582000P3) for more information.

Restrictions

For use in Spec. No. 588705300 module mounting assembly.

Ordering Notes

1) Order by P/N 1C48582000P3 as required.

Inverter Module

Inverter Module, P/N 1I1201000

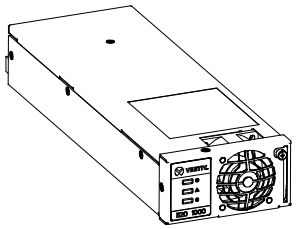

Features

- Model I120-1000, Spec. No. 1I1201000, 120 VAC, 1kVA/1kW at 40 °C and 120 VAC / 0.5 kVA at 65 °C inverter module.
- Refer to the Inverter Instructions (UM1I1201000) for more information.

Ordering Notes

1) Order by P/N 1I1201000 as required.

Optional +27 VDC Vertiv™ eSure™ Bullet Converter Kit, 60147273

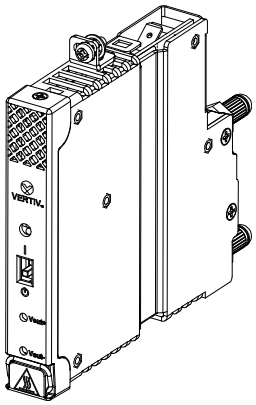

Features

- The +27 VDC Vertiv eSure Bullet Converter (Model C48/27-375B, Spec. No. 1C4827375B) is a compact DC/DC converter unit which offers efficient power conversion. It operates from a nominal -48 VDC source to provide up to 375 W at 40 °C and 300 W at 65 °C, regulated +27 VDC to the load for continuous operation to end of battery discharge. Refer to UM60147273, and IM565939 for further information.

Restrictions

Only install the power extend converter into a -48 VDC distribution position. Non-repairable damage will occur if the power extend converter is plugged into a +24 VDC distribution position.

It is recommended to install the +27 VDC Bullet Converter in the distribution panel on the side of the panel opposite from the panel's input busbar. In this system, the input busbar is on the left-hand side.

Up to three (3) converters can be paralleled together for a total output power of 750 W at 40 °C and 600 W at 65 °C.

Requires a Power Extend Converter Mounting kit.

Ordering Notes

1) To add a +27 VDC Vertiv eSure Bullet Converter to a 582137100 List 20, List 21, List 25, List 26, and List 27 power system order up to three (3) 60147273 converter kits, a 60016097 two-pole, 545346DCP three-pole, 10078650 four-pole or 10078651 five-pole paralleling busbar, an optional 10062803 +27 VDC Bullet Nose 6-Position GMT Fuse Board Kit and the appropriate Power Extend Converter Mounting Kit for the distribution cabinet where it will be installed. Refer to the UM60147273 bullet converter user manual to determine the appropriate mounting kit.

© 2026 Vertiv Group Corp. All Rights Reserved.

Optional eSure™ Power Extend Converter

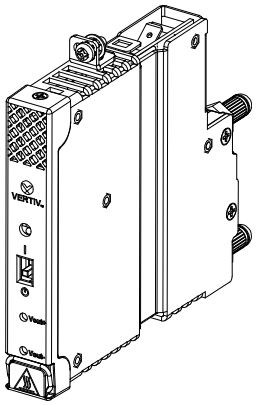

Features

- The eSure Power Extend Converter (Model C48/58-1000B, Spec. No. 1C48581000B) is a compact DC/DC converter unit which offers efficient power conversion. It operates from a nominal -48 VDC source to provide regulated -58 VDC to the load for continuous operation to end of battery discharge. Refer to UM565050, IM565939, and IM60019000 for further information.

Restrictions

Only install the power extend converter into a -48 VDC distribution position. Non-repairable damage will occur if the power extend converter is plugged into a +24 VDC distribution position.

Requires a Power Extend Converter Mounting kit.

Ordering Notes

1) To add an eSure Power Extend Converter to a 582137100 List 20, List 21, List 25, List 26, and List 27 power system; refer to the material list in the eSure Power Extend Converter Calculator (link provided below).

   https://www.vertiv.com/en-us/products-catalog/critical-power/dc-power-systems/esure-power-extend-converter-c4858-1000/#/downloads

-48 VDC to -58 VDC Output Converter Upgrade Field Kit, P/N 60028039

Features

- This kit provides components to change converter module mounting positions for Spec. No. 1C48241500 (-48 VDC to +24 VDC) converter modules to mounting positions for Spec. No. 1C48582000P3 (-48 VDC to -58 VDC) converter modules. It also provides components to change the breaker positions in the distribution cabinet from +24 VDC to -58 VDC.

Restrictions

For use in Power System, List 26 using row 2 dual voltage panels List DA-DF. Not for use if List AB is installed in row 2.

Requires an NCU Controller in the system to use the Spec. No. 1C48582000P3 (-48 VDC to -58 VDC) converter modules.

Ordering Notes

1) Order by P/N 60028039 as required.
2) Order -48 VDC to -58 VDC converter modules P/N 1C48582000P3 as required (see page 84).

© 2026 Vertiv Group Corp. All Rights Reserved.

-58V, Busbar, Row 1, Field Kit, P/N 60031300

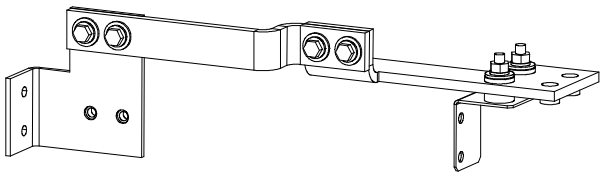

Features

- This kit provides components to convert the row 1 (bottom row) distribution panel to -58V positions in the field.

Restrictions

For use in Power System, List 26 using row 2 dual voltage panels List FA-FF.

For use in Power System, List 26 using row 2 dual voltage panels List DA-DF only if row 2 panels are converted to -58 VDC output with the installation of Converter Upgrade Field Kit, P/N 60028039.

Requires an NCU Controller in the system to use the Spec. No. 1C48582000P3 (-48 VDC to -58 VDC) converter modules.

Ordering Notes

1) Order P/N 60028039 as required (see above).
2) Order by P/N 60031300 as required.

Module Mounting Position Blank Cover Panel

Module Mounting Position Blank Cover Panel, P/N SXA 110 0035/1

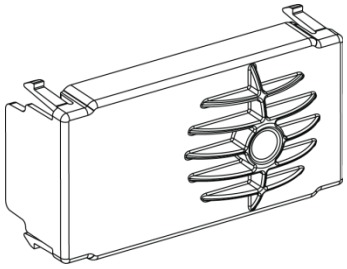

Features

- Covers one (1) unused module mounting position.

Restrictions

For use in Spec. No. 588705300 module mounting assembly and in optional inverter system.

Ordering Notes

1) Order by P/N SXA 110 0035/1 as required. Order a module mounting position blank cover panel for each empty module mounting position in the system, as desired.

Optional Transient Voltage Surge Suppressor (TVSS) Device, P/N 565281

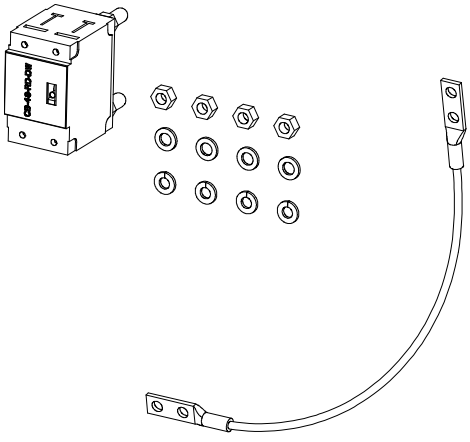

Features

- When properly grounded, the device(s) suppresses transient voltages that are above 60 VDC.
- Contains an indicator which illuminates when circuit has activated to suppress voltages.
- Plugs into a distribution device mounting position of a bullet nose type distribution panel.

Restrictions

For use in bullet nose type distribution panels (List AA, AB, AN, AO, BA, BB, BC, BD, BN, BO, DA, DB, DC, DD, DE, DF, FA, FB, FC, FD, FE, FF, and GB).

When used, all distribution panels in the system require a TVSS device.

Unless otherwise specified, install the TVSS device in the mounting position closest to the distribution panel's input busbar.

Wire to be sized so that the maximum wire resistance is less than 0.550 milliohms. Properly sized cable provided with the TVSS device.

Caution: ***The TVSS device occupies two mounting positions. Leave an additional empty mounting position between the TVSS device and any overcurrent protective device.***

Ordering Notes

1) Order kit P/N 565281 as required (includes TVSS device P/N 122201 plus lug mounting hardware and ground cable).

© 2026 Vertiv Group Corp. All Rights Reserved.

DC Distribution Devices

Bullet Nose Type Circuit Breakers and Bullet Nose Type Fuseholders equipped with TPS/TLS Fuses

Features

- Each circuit breaker (as listed in Table 14) plugs into one, two, three, or four mounting position(s) on a distribution panel containing bullet nose type distribution positions.
- A single fuseholder provides for installation of a 3A to 100A Bussmann TPS type or Littelfuse TLS type fuse (as listed in Table 15). This fuseholder plugs into a single mounting position on a distribution panel containing bullet nose type distribution positions. This fuseholder provides a GMT-A alarm type fuse, which operates open to provide an alarm indication if the associated distribution fuse opens.

Restrictions

For use in Lists AA, AB, AN, AO, BA, BB, BC, BD, BN, BO, DA, DB, DC, DD, DE, DF, FA, FB, FC, FD, FE, FF, and GB.

Install -48 VDC distribution devices from left to right, starting with the highest capacity and working to the lowest capacity. Install +24 VDC or -58 VDC distribution devices from right to left, starting with the highest capacity and working to the lowest capacity.

125 A to 200 A circuit breakers are 2-pole devices (occupy two mounting positions).
225 A to 300 A circuit breakers are 3-pole devices (occupy three mounting positions).
400 A circuit breakers are 4-pole devices (occupy four mounting positions).

At 40 °C, loads should not exceed 80% of the device rating for circuit breakers rated 1 A to 300 A and fuses rated 1 A to 100 A. For 400 A circuit breakers loads should not exceed 65% of the device rating.

At 65 °C, loads should not exceed 80% of the device rating for circuit breakers rated 1 A to 75 A and fuses rated 1 A to 70 A, 70% of the device rating for circuit breakers rated 80 A to 150 A and fuses rated 80 A to 100 A, and 60% of the device rating for circuit breakers rated 200 A to 300 A. Loads should not exceed 65% of the device rating for circuit breakers rated 400 A. For List DF: At end of discharge in a 65 °C ambient loads should not exceed 70% of device ratings for circuit breakers and fuses rated 1 A to 300 A and 65% for circuit breakers rated at 400 A.

Caution: ***At 40 °C and 65 °C, circuit breaker or fuse with a rating of 90 A or greater SHALL HAVE an empty mounting position between it and any other overcurrent protective device.***

Note: ***At 40 °C and 65 °C, battery disconnect devices with a rating of 90 A to 300 A of Lists BA, BB, BC, BD, BN, and BO do not require a space if used at 66% of the device rating.***

Ordering Notes

1) Order circuit breakers as required per Table 14.
2) Order fuses as required per Table 15. For each fuse ordered, also order one (1) P/N 117201 bullet nose type fuseholder.
3) See Table 34 for recommended battery and load distribution wire sizes and lugs.
4) When ordering 2-pole devices, busbar lug adapter kit P/N 559804 or P/N 563191 may be ordered per device. See Table 20. Other options are shown in Table 19.
5) When ordering 3-pole devices, busbar lug adapter kit P/N 559805 or P/N 563193 may be ordered per device. See Table 20 . Other options are shown in Table 19.
6) When ordering 4-pole devices, busbar lug adapter kit P/N 60159564 may be ordered per device. See Table 20. Other options are shown in Table 19.

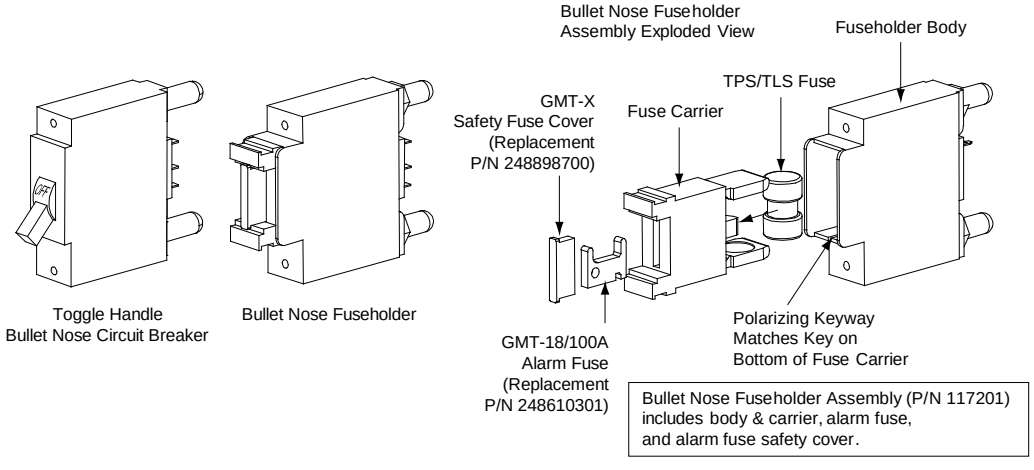

© 2026 Vertiv Group Corp. All Rights Reserved.

Ampere Rating	Number of Poles	Number of Mounting Positions Required	Part Number	
			Electrical Trip[1] (White Handle)	Electrical/ Mechanical Trip[2] (Black Handle)
1	1	1	102272	101596
3	1	1	102273	101597
5	1	1	102274	101598
10	1	1	102275	101599
15	1	1	102276	101600
20	1	1	102277	101601
25	1	1	102278	101602
30	1	1	102279	101603
35	1	1	102280	101604
40	1	1	102281	101605
45	1	1	121998	121997
50	1	1	102282	101606
60	1	1	102283	101607
70	1	1	102284	101608
75	1	1	102285	101609
80	1	1	121996	121995
90	1	1 [(3)]	138887	138888
100	1	1 [(3)]	102286	101610
125	2	2 [(3)]	516991	516838
150	2	2 [(3)]	516993	516839
175	2	2 [(3)]	144883	144884
200	2	2 [(3)]	121831	121832
225	3	3 [(3)]	144885	144886
250	3	3 [(3)]	121835	121836
300	3	3 [(3)]	149075	149076
400	4	4[(3)]	--	150850
See Table 34 for recommended battery and load distribution wire sizes and lugs.				
When ordering 2-pole devices, busbar lug adapter kit P/N 559804 or P/N 563191 may be ordered per device. See Table 20. Other options are shown in Table 19.				
When ordering 3-pole devices, busbar lug adapter kit P/N 559805 or P/N 563193 may be ordered per device. See Table 20. Other lug options are shown in Table 19.				
When ordering 4-pole devices, busbar lug adapter kit P/N 60159564 may be ordered per device. See Table 20. Other lug options are shown in Table 19.				

Circuit Breaker Alarm Operation:

1 Provides an alarm during an electrical trip condition only.

2 Provides an alarm during an electrical or manual trip condition.

3 The circuit breaker physically requires the listed number of mounting positions. Refer to “Restrictions” under “Bullet Nose Type Circuit Breakers and Bullet Nose Type Fuseholders equipped with TPS/TLS Fuses” on page 87 for any required empty mounting positions.

Note: *Electrical Trip only circuit breakers are not typically used for battery disconnect circuit breakers.*

Table 14
Toggle Handle Bullet Nose Type Circuit Breakers

© 2026 Vertiv Group Corp. All Rights Reserved.

Ampere Rating	Part Number	Bussmann P/N	Littelfuse P/N
3	248230900	TPS-3	TLS003
5	248231000	TPS-5	TLS005
6	248231200	TPS-6	TLS006
10	248231500	TPS-10	TLS010
15	248231800	TPS-15	TLS015
20	248232100	TPS-20	TLS020
25	248232400	TPS-25	TLS025
30	248232700	TPS-30	TLS030
40	248233300	TPS-40	TLS040
50	248233900	TPS-50	TLS050
60	248234200	TPS-60	TLS060
70	248234500	TPS-70	TLS070
80	118413	--	TLS080
90	118414	--	TLS090
100	118415	--	TLS100
Bullet Nose Type Fuseholder		P/N 117201 (Includes Fuseholder, 18/100A GMT-A Alarm Fuse, and GMT-X Safety Fuse Cover)	
See Table 34 for recommended battery and load distribution wire sizes and lugs.			

Table 15
Bullet Nose Type Fuseholders and TPS/TLS Fuses

Bullet Nose Bypass Busbar, P/N 535015

Features

- Replaces a bullet nose circuit breaker or fuseholder when a protective or disconnect device is not required.

Ordering Notes

1) Order by P/N 535015 as required.

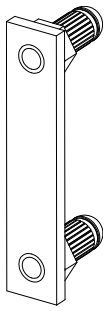

© 2026 Vertiv Group Corp. All Rights Reserved.

Optional Bullet Nose Type 6-Position GMT Distribution Fuse Block, P/N 559737

Features

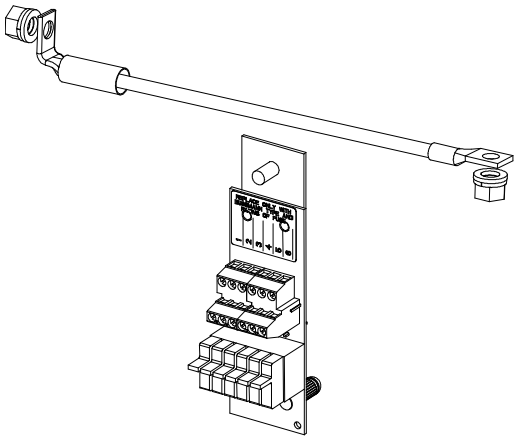

- Provides six (6) load distribution fuse positions (1/4 A to 15 A GMT alarm-type fuses).
- Single voltage distribution (-48 VDC or +24 VDC or -58 VDC).
- Mounts in two (2) distribution positions of any “bullet nose” distribution panel.
- Screw clamp type load and load return terminals provided.
- Includes six (6) dummy fuses equipped with safety fuse covers.

Restrictions

For use in a 1-row system (List 20, List 25, List 27) and the top row of a 2-row system (List 21, List 26).

For use in the bottom row of a 2-row system (List 21, List 26) if the return busbars are rotated to vertical position.

Occupies two (2) bullet device mounting positions.

Terminal block wire size capacity is 26 AWG to 14 AWG.

The GMT fuses have an interrupting rating of 450 A @ 60 VDC.

At 40 °C Ambient:

- **Maximum total current is 42 A.**
- **Maximum fuse size is 15 A.**
- **When used for power distribution, load should not exceed 80% of device rating, except 10 A and 15 A fuses for which load should not exceed 70% of device rating.**
- **GMT fuses greater than 10 A SHALL have an empty mounting position between it and any other fuse.**

At 65 °C Ambient:

- **Maximum total current is 24 A.**
- **Maximum fuse size is 10 A.**
- **When used for power distribution, load should not exceed 80% of device rating, except 10 A fuses for which load should not exceed 70% of device rating.**
- **GMT fuses greater than 5 A SHALL have an empty mounting position between it and any other fuse.**

Ordering Notes

1) Order optional Bullet Nose Type 6-Position GMT Fuse Block (P/N 559737) as required (see restrictions above). Provides one alarm fuse distribution assembly, ground return link, and hardware.
2) Order fuses as required per Table 16.

© 2026 Vertiv Group Corp. All Rights Reserved.

Optional Bullet Nose Type 6-Position GMT Distribution Fuse Block, P/N 549017

Features

- Provides six (6) load distribution fuse positions (1/4A to 15A GMT alarm-type fuses).
- Single voltage distribution (-48V or +24V or -58V).
- Mounts in two (2) distribution positions of any "bullet nose" distribution panel.
- Screw clamp type load and load return terminals provided.
- Includes six (6) dummy fuses equipped with safety fuse covers.

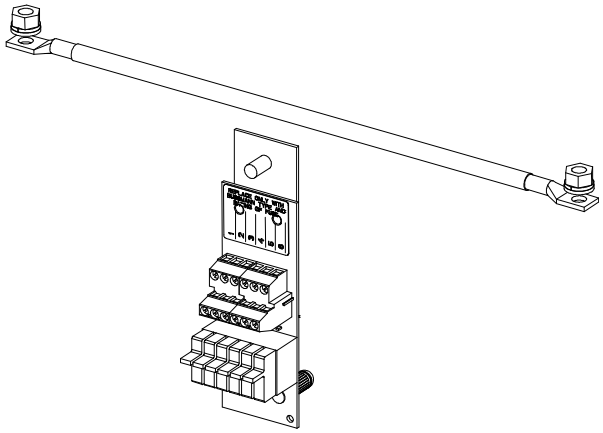

Restrictions

For use in the bottom row of a 2-row system (List 21, 26).

For use in the top row of a 2-row system (List 21, List 26) if the return busbars are rotated to vertical position.

Occupies two (2) bullet device mounting positions.

Terminal block wire size capacity is 26 AWG to 14 AWG.

The GMT fuses have an interrupting rating of 450 A @ 60 VDC.

At 40 °C Ambient:

- **Maximum total current is 42 A.**
- **Maximum fuse size is 15 A.**
- **When used for power distribution, load should not exceed 80% of device rating, except 10 A and 15 A fuses for which load should not exceed 70% of device rating.**
- **GMT fuses greater than 10 A SHALL have an empty mounting position between it and any other fuse.**

At 65 °C Ambient:

- **Maximum total current is 24 A.**
- **Maximum fuse size is 10 A.**
- **When used for power distribution, load should not exceed 80% of device rating, except 10 A fuses for which load should not exceed 70% of device rating.**
- **GMT fuses greater than 5 A SHALL have an empty mounting position between it and any other fuse.**

Ordering Notes

1) Order optional Bullet Nose Type 6-Position GMT Fuse Block (P/N 549017) as required (see restrictions above). Provides one alarm fuse distribution assembly, ground return link, and hardware.
2) Order fuses as required per Table 16.

© 2026 Vertiv Group Corp. All Rights Reserved.

Optional +27 VDC Bullet Nose 6-Position GMT Fuse Board Kit, P/N 10062803

Features

- Provides six (6) load distribution fuse positions (1/4 A to 15 A GMT alarm-type fuses).
- Single voltage distribution (+27 VDC).
- Mounts in two (2) distribution positions of any "bullet nose" distribution panel.
- Screw clamp type load and load return terminals provided.
- Includes six (6) dummy fuses equipped with safety fuse covers.

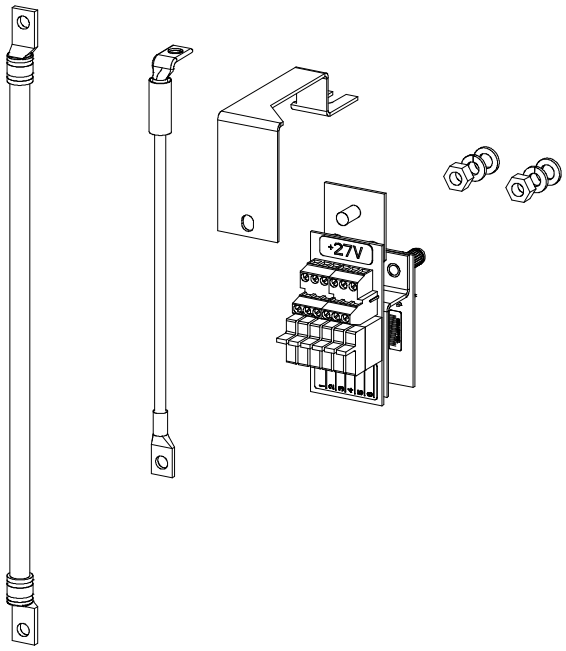

Restrictions

Only to be connected and used with the +27 VDC Vertiv eSure Bullet Converter.

Occupies two (2) bullet device mounting positions.

Terminal block wire size capacity is 26 AWG to 14 AWG.

The GMT fuses have an interrupting rating of 450 A @ 60 VDC. It is recommended to install fuses with the highest ampacity starting in the farthest position from the +27 VDC Vertiv eSure Bullet Converter.

At 40 °C Ambient:

- **Maximum total current is 27.8 A.**
- **Maximum fuse size is 15 A.**
- **When used for power distribution, load should not exceed 80% of device rating, except 10 A and 15 A fuses for which load should not exceed 70% of device rating.**
- **GMT fuses greater than 10 A SHALL have an empty mounting position between it and any other fuse.**

At 65 °C Ambient:

- **Maximum total current is 22 A.**
- **Maximum fuse size is 15 A.**
- **When used for power distribution, load should not exceed 80% of device rating, except 10 A fuses for which load should not exceed 70% of device rating and 15 A fuses for which load should not exceed 50% of device rating.**
- **GMT fuses greater than 5 A SHALL have an empty mounting position between it and any other fuse.**

Ordering Notes

1) Order optional +27 VDC GMT Bullet Nose 6-Position GMT Fuse Board Kit (P/N 10062803) as required (see restrictions above). Provides one alarm fuse distribution assembly, return links, and hardware.
2) Order a 60016097 two-pole, 545346DCP three-pole, 10078650 four-pole or 10078651 five-pole paralleling busbar to parallel with the +27 VDC eSure Bullet Converter, depending on the number of converters ordered. The input bullet terminal on the GMT Fuse Board is located in the top-right pole adjacent to the converter module pole when mounted to the left of the converter/s. When mounting the GMT board on the right-hand side of the converter/s, order a paralleling busbar with an additional set of holes. For example, for two converter modules and a GMT Fuse Board, a three-position paralleling busbar would be used for mounting the GMT Fuse board to the left of the converters and a four-position paralleling busbar for right-side mounting.
3) Order fuses as required per Table 16.
4) Mounting and installation information can be found in UM10062803 and IM565939.

© 2026 Vertiv Group Corp. All Rights Reserved.

GMT Type Load Distribution Fuses

Features

- For use in List KG distribution panel.
- An optional “Bullet Nose Type 6-Position GMT Distribution Fuse Block” (P/N 559737 or 549017) is also available for additional load distribution.

Restrictions

When used for power distribution, load should not exceed 80% of device rating, except 10 A and 15 A fuses, for which load should not exceed 70% of device rating. This de-rating does not apply for the optional +27 VDC Bullet Nose 6-position GMT Fuse Board (P/N 10062803).

See also “Restrictions” under “Optional Bullet Nose Type 6-Position GMT Distribution Fuse Block, P/N 559737” on page 90 and “Optional Bullet Nose Type 6-Position GMT Distribution Fuse Block, P/N 549017” on page 91.

Ordering Notes

1) Order fuses as required per Table 16.

Ampere Rating	Part Number	Fuse Color
18/100 (GMT-A)	248610301	---
1/4	248610200	Violet
1/2	248610300	Red
3/4	248610500	Brown
1-1/3	248610700	White
2	248610800	Orange
3	248610900	Blue
5	248611000	Green
7-1/2	248611300	Black-White
10	248611200	Red-White
15	248611500	Red-Blue
Replacement Safety Fuse Cover (GMT-Y)	102774	---
Replacement Dummy Fuse	248872600	---

Table 16
GMT Fuses

GJ/218 Type Circuit Breakers for List 60

Ordering Notes

1) See “List 60: 23” Hybrid Connection Cabinet” on page 36.

MCB Circuit Breakers for List 61

Ordering Notes

1) See “List 61: 23” Solar Connection Cabinet” on page 38.

© 2026 Vertiv Group Corp. All Rights Reserved.

Standard Crimp Lugs, Special Application Crimp Lugs, and Busbar Adapter Kits and Hardware Kits

Standard Crimp Lugs

Refer to Table 17 and Table 18.

Lead Size	Part Number	
14-10 AWG	245342300	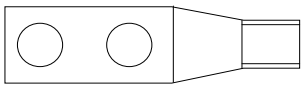
8 AWG	245390200	
6 AWG	245346700	
4 AWG	245346800	
2 AWG	245346900	

Lugs should be crimped per lug manufacturer's specifications.

Table 17
Crimp Lug
Two-Hole, 1/4" Bolt Clearance Hole, 5/8" Centers

Lead Size	Part Number	
6 AWG	245349900	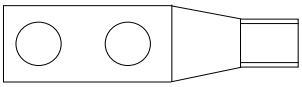
4 AWG	245350000	
2 AWG	245348200	
1/0 AWG	245347100	
2/0 AWG	245347200	
3/0 AWG	245347300	
4/0 AWG	245347400	
250 kcmil	245347500	
300 kcmil	245347600	
350 kcmil	245347700	
400 kcmil	245347800	
500 kcmil	245347900	
600 kcmil	245348000	
750 kcmil	245348100	

Lugs should be crimped per lug manufacturer's specifications.

Table 18
Crimp Lug
Two-Hole, 3/8" Bolt Clearance Hole, 1" Centers

© 2026 Vertiv Group Corp. All Rights Reserved.

Special Application Crimp Lug / Strap Combination, Busbar Lug Adapters, and Hardware Kits

Features

- See Table 19 and Table 20 for part numbers and descriptions of available items.

Restrictions

See note in Table 19.

Ordering Notes

1) Order by part number from Table 19 and Table 20 as required.
2) If using multiple Special Application Crimp Lugs on a 400A breaker, order P/N 10078650 four-pole lug adapter plate.

Lead Size	Part Number	Description	
1/0 AWG	245393500	Special Application Crimp Lug / Strap Combination: Straps two fuseholder/circuit breaker wiring positions together and provides a crimp-type lug which allows distribution wiring up to 350 kcmil size (maximum size of wire to be connected to a single position is 2 AWG). Designed for use with 125 A and larger bullet nose-type circuit breakers or TPS/TLS-type fuses, which require at least two mounting positions. ***Note:*** *If used with bullet nose-type circuit breakers or TPS/TLS-type fuses smaller than 125 A, an empty mounting position is required adjacent to the distribution device.*	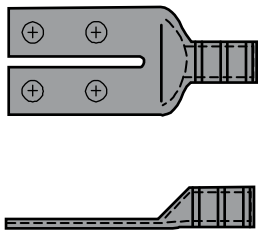
2/0 AWG	245393600		
3/0 AWG	245393700		
4/0 AWG	245393800		
250 kcmil	514872		
350 kcmil	514873		

Note: *Rear exit cables require use of P/N 559803 adapters.*

For top exit cables off the return load bar in front, the lug will protrude beyond the plane of the distribution cabinet top surface.

Lugs should be crimped per lug manufacturer's specifications.

Table 19
Special Application Crimp Lug / Strap Combination
(Two-Hole Lug, 1/4" Bolt Clearance Hole, 5/8" Centers)

© 2026 Vertiv Group Corp. All Rights Reserved.

Part Number	Description	
559803	Busbar Lug Adapter Kit: Converts one (1) load position (1/4-20 on 5/8” centers) to one (1) load landing (1/4-20 on 5/8” centers), right angle.	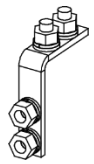
559804	Busbar Lug Adapter Kit: Converts two (2) load positions (1/4-20 on 5/8” centers) to one (1) landing (3/8-16 on 1” centers). Right angle load busbar and straight return busbar for rear wiring egress.	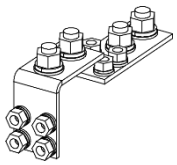
559805	Busbar Lug Adapter Kit: Converts three (3) load positions (1/4-20 on 5/8” centers) to one (1) landing (3/8-16 on 1” centers). Right angle load busbar and straight return busbar for rear wiring egress.	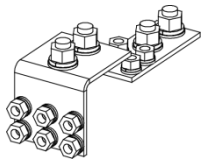
60159564	Busbar Lug Adapter Kit: Converts four (4) load positions (1/4-20 on 5/8" centers) to two (2) load landings (3/8-16 on 1" centers). Right angle load busbar and straight return busbar for rear wiring egress.	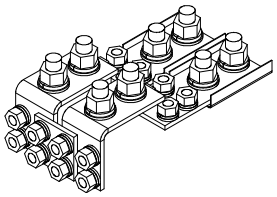
545412DCP	Lug Hardware Kit: (4) 1/4-20 nuts, lock washers, and flat washers.	
10013376	Lug Hardware Kit: (38) 1/4-20 nuts, lock washers and flat washers.	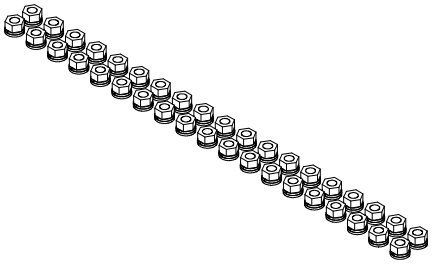

Busbar lug adapter kits include hardware shown.

Unless otherwise specified, busbar lug adapter kits are factory installed when ordered with system.

Table 20
Busbar Lug Adapter and Hardware Kits (cont’d on next page)

© 2026 Vertiv Group Corp. All Rights Reserved.

563191	Busbar Lug Adapter Kit: Includes one (1) busbar that mounts on the two lug landing positions of either of the following: • a 125 A, 150 A, or 200 A bullet nose circuit breaker. • two landings of the associated ground return bar. This busbar provides a landing for one standard two-hole lug having 3/8" bolt clearance holes on 1" centers. Busbar and all lug mounting hardware is included. Order two (2) Part No. 563191 per 125 A, 150 A, and 200 A bullet nose circuit breaker ordered, as desired. Restriction: This busbar in intended for field installation only of customer wiring exiting the top of the distribution unit. The load return busbar must be rotated to its vertical orientation as shown in IM582137100 under "Changing Orientation of Load Return Busbars Located in the Distribution Cabinet" (see illustration below).	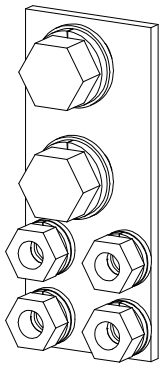
563193	Busbar Lug Adapter Kit: Includes one (1) busbar that mounts on the three lug landing positions of either of the following: • a 225 A through 300 A bullet nose circuit breaker. • three landings of the associated ground return bar. This busbar provides a landing for one standard two-hole lug having 3/8" bolt clearance holes on 1" centers. Busbar and all lug mounting hardware is included. Order two (2) Part No. 563193 per 225 A through 300 A bullet nose circuit breaker ordered, as desired. Restriction: This busbar in intended for field installation only of customer wiring exiting the top of the distribution unit. The load return busbar must be rotated to its vertical orientation as shown in IM582137100 under "Changing Orientation of Load Return Busbars Located in the Distribution Cabinet" (see illustration below).	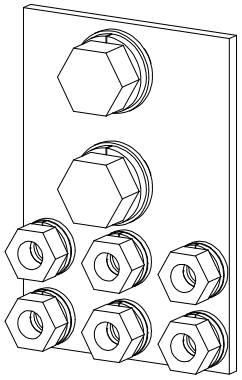

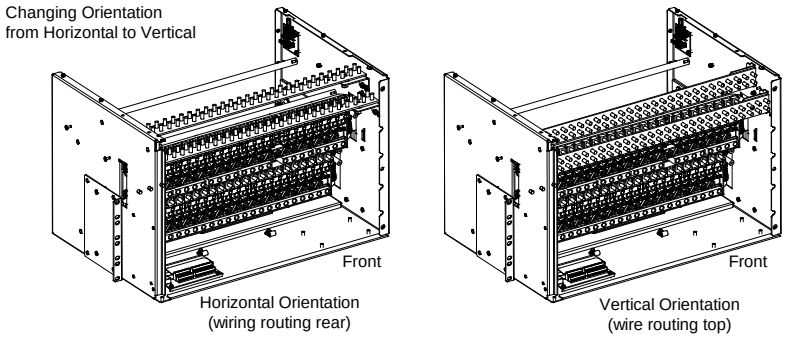

Busbar lug adapter kits include hardware shown.

Unless otherwise specified, busbar lug adapter kits are factory installed when ordered with system.

Table 20
Busbar Lug Adapter and Hardware Kits (cont'd from previous page)

© 2026 Vertiv Group Corp. All Rights Reserved.

Rectifier AC Input / Solar Converter DC Input Cable Assemblies and Rectifier AC Input Line Cords

Rectifier AC Input / Solar Converter DC Input Cable Assembly, P/N 535232

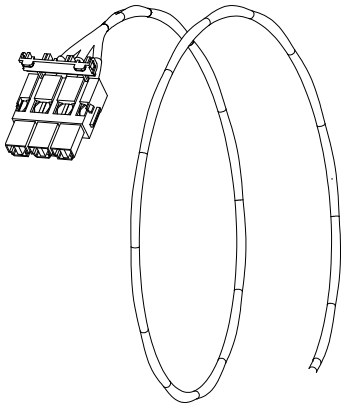

Features

- One (1) 30” long, 8 AWG, input cable assembly that is terminated on one end with a Molex plug which mates with the input receptacle on a 588705300 List 03, 05, 13, 15, 23, 25, 33, 35, 43, 45 module mounting assembly, and not terminated on the remaining end.

Restrictions

For use with a module mounting assembly equipped with rear plug-in input connectors (588705300 List 03, 05, 13, 15, 23, 25, 33, 35, 43, 45).

Rated for 30 A.

Ordering Notes

1) Order input cable assemblies as required.

Rectifier AC Input / Solar Converter DC Input Cable Assembly, P/N 547898

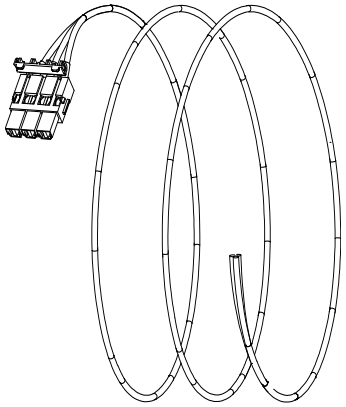

Features

- One (1) 6’ long, 8 AWG, input cable assembly that is terminated on one end with a Molex plug which mates with the input receptacle on a 588705300 List 03, 05, 13, 15, 23, 25, 33, 35, 43, 45 module mounting assembly, and not terminated on the remaining end.

Restrictions

For use with a module mounting assembly equipped with rear plug-in input connectors (588705300 List 03, 05, 13, 15, 23, 25, 33, 35, 43, 45).

Rated for 30 A.

Ordering Notes

1) Order input cable assemblies as required.

Rectifier AC Input / Solar Converter DC Input Cable Assembly, P/N 553202

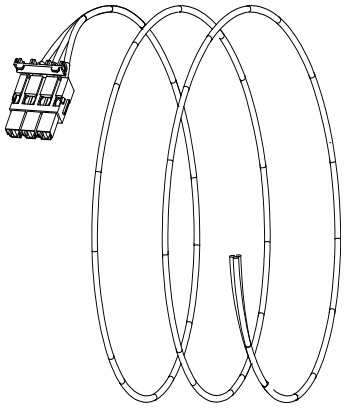

Features

- One (1) 12’ long, 8 AWG, AC input cable assembly that is terminated on one end with a Molex plug which mates with the input receptacle on a 588705300 List 03, 05, 13, 15, 23, 25, 33, 35, 43, 45 module mounting assembly, and not terminated on the remaining end.

Restrictions

For use with a module mounting assembly equipped with rear plug-in input connectors (588705300 List 03, 05, 13, 15, 23, 25, 33, 35, 43, 45).

Rated for 30 A.

Ordering Notes

1) Order input cable assemblies as required.

© 2026 Vertiv Group Corp. All Rights Reserved.

Rectifier AC Input Line Cord, P/N 540946

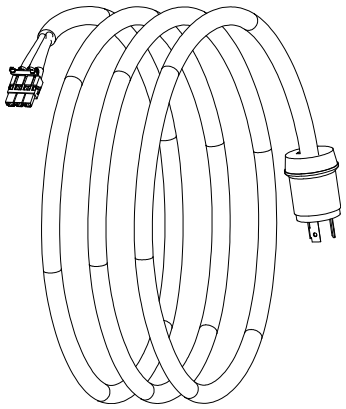

Features

- One (1) 14’ long, 8/3 AWG, AC input line cord that is terminated on one end with a Molex plug which mates with the AC input receptacle on a 588705300 List 03, 05, 13, 15, 23, 25, 33, 35, 43, 45 module mounting assembly, and terminated on the remaining end with a NEMA L6-30P twist-lock plug.

Restrictions

For use with a module mounting assembly equipped with rear plug-in input connectors (588705300 List 03, 05, 13, 15, 23, 25, 33, 35, 43, 45).

For 208 VAC / 240 VAC only (rated for 30 A at 208 VAC / 240 VAC).

For use with rectifiers only.

Ordering Notes

1) Order AC input line cords as required.

Rectifier AC Input Line Cord, P/N 545252DCP

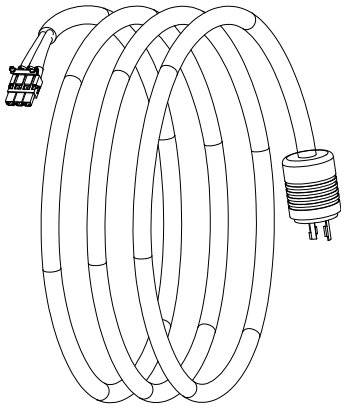

Features

- One (1) 14’ long, 8/3 AWG, AC input line cord that is terminated on one end with a Molex plug which mates with the AC input receptacle on a 588705300 List 03, 05, 13, 15, 23, 25, 33, 35, 43, 45 module mounting assembly, and terminated on the remaining end with a NEMA L5-30P twist-lock plug.

Restrictions

For use with a module mounting assembly equipped with rear plug-in input connectors (588705300 List 03, 05, 13, 15, 23, 25, 33, 35, 43, 45).

For 120 VAC only (rated for 30 A at 120 VAC).

For use with rectifiers only.

Ordering Notes

1) Order AC input line cords as required.

Rectifier AC Input Line Cord, P/N 545616DCP

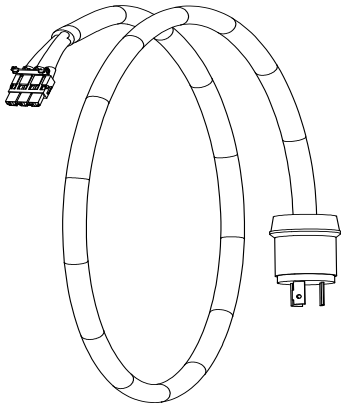

Features

- One (1) 6’ long, 8 AWG, AC input line cord that is terminated on one end with a Molex plug which mates with the AC input receptacle on a 588705300 List 03, 05, 13, 15, 23, 25, 33, 35, 43, 45 module mounting assembly, and terminated on the remaining end with a NEMA L6-30P twist-lock plug.

Restrictions

For use with a module mounting assembly equipped with rear plug-in input connectors (588705300 List 03, 05, 13, 15, 23, 25, 33, 35, 43, 45).

For 208 VAC / 240 VAC only (rated for 30 A at 208 VAC / 240 VAC).

For use with rectifiers only.

Ordering Notes

1) Order AC input line cords as required.

© 2026 Vertiv Group Corp. All Rights Reserved.

Input Cord Bracket Kit (P/N 562050)

Features

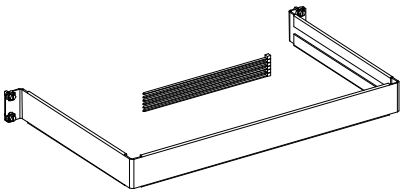

- Consists of a bracket and hardware for mounting to the rear of a 19" relay rack that will support the input cables that plug into the Molex connectors on the module mounting assemblies. The customer will tie the input cables to this bracket using the supplied cable ties.

Restrictions

For use with a 19” relay rack.

Ordering Notes

1) Order P/N 562050 as required.

Note: *If a relay rack and power system are ordered along with the bracket, the bracket will be mounted to the rack at the factory.*

Input Cord Bracket Kit (P/N 563456)

Features

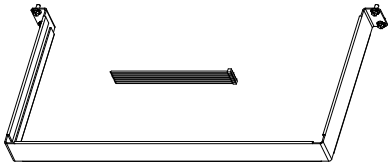

- Consists of a bracket and hardware for mounting to the rear of a 23" relay rack that will support the input cables that plug into the Molex connectors on the module mounting assemblies. The customer will tie the input cables to this bracket using the supplied cable ties.

Restrictions

For use with a 23” relay rack.

Ordering Notes

1) Order P/N 563456 as required.

Note: *If a relay rack and power system are ordered along with the bracket, the bracket will be mounted to the rack at the factory.*

User Replaceable Alarm, Reference, and Control Fuses

Ordering Notes

1) Order replacement alarm fuses as required per Table 21.

Assembly	Desig.	Function	Size (Amperes)	Type	Part No.
TPS/TLS Fuseholders (P/N 117201)	FA	Fuse Alarm	18/100	Bussmann GMT-A	248610301
				Safety Fuse Cover (GMT-X)	248898700

Table 21
Replaceable Alarm, Reference, and Control Fuses

© 2026 Vertiv Group Corp. All Rights Reserved.

User Replaceable Components

Ordering Notes

1) Refer to Table 22.

Item	Part Number	
Rectifier Module	1R482000E3	
Solar Converter Module	1S482000E3	
Converter Module	1C48241500	
Converter Module	1C48582000P3	
Inverter Module	1I1201000	
NCU Controller	1M830BNA	
Temp Probe Sensor	552822	
Controller IB2 Interface Board	MA4C5U31	
Controller EIB Extended Interface Board	MA455U41	
Controller IB5 (second Ethernet port) Board	10146319 (IB5 Board) 559741 (Complete Assembly, Internal)	
System Interface Board	555484	
SM-DU (List 60 Hybrid Connection Cabinet)	SMDU	
SM-DU Interface Board (List 60 Hybrid Connection Cabinet)	559740	
For equipment provided with **two** SPD assemblies per output voltage circuit		
SPD (Surge Protection Device) Replacement Plug-in Module (Replacement module for SPD P/N 10034885). Each SPD P/N 10034885 has two P/N 10035033 replacement modules. Both modules should be replaced at the same time.	10035033	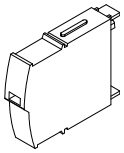
SPD (Surge Protection Device) Replacement Assembly (includes SPD mounting base with two installed P/N 10035033 SPD plug-in modules.)	10034885	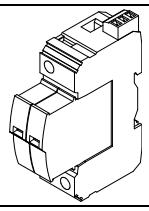

Table 22 (cont'd on next page)
Replaceable Assemblies

© 2026 Vertiv Group Corp. All Rights Reserved.

Item	Part Number	
For equipment provided with **one** SPD assembly per output voltage circuit		
SPD (Surge Protection Device) Replacement Plug-in Module (Replacement module for SPD P/N 10060979). Each SPD P/N 10060979 (Phoenix Contacts Version) has four P/N 10035033 (Phoenix Contacts only) replacement modules. All four modules should be the same.	10035033 (Phoenix Contact only)	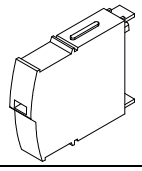
SPD (Surge Protection Device) Replacement Assembly (includes SPD mounting base with four installed P/N 10035033 SPD plug-in modules.)	10060979 (Phoenix Contact Version)	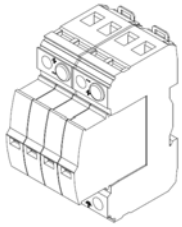
SPD (Surge Protection Device) Replacement Plug-in Module (Replacement module for SPD P/N 10060979). Each SPD P/N 10060979 (Bourns Version) has two P/N 10071911 replacement modules. Both modules should be replaced at the same time.	10071911 (Bourns only)	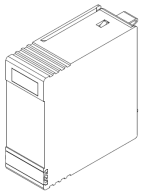
SPD (Surge Protection Device) Replacement Assembly (includes SPD mounting base with two installed P/N 10071911 SPD plug-in modules.)	10060979 (Bourns Version)	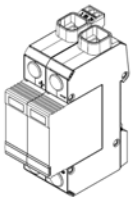

Table 22 (cont'd from previous page)
User Replaceable Assemblies

RECOMMENDED WIRE SIZES, BRANCH CIRCUIT PROTECTION, CRIMP LUGS, AND WIRING ILLUSTRATIONS

Relay Rack / Equipment Cabinet Frame Grounding Requirements

For relay rack / equipment cabinet frame grounding requirements, refer to the current edition of the American National Standards Institute (ANSI) approved National Fire Protection Association's (NFPA) National Electrical Code (NEC), applicable local codes, and your specific site requirements.

A customer's grounding network lead can be attached to the top of each relay rack. Provision is made for installing a lead with a two-hole lug that has 1/4" bolt clearance holes on 5/8" centers. Refer to Table 17 for lug selection.

Power System Shelf Frame Grounding Requirements

For power system shelf frame grounding requirements, refer to the current edition of the American National Standards Institute (ANSI) approved National Fire Protection Association's (NFPA) National Electrical Code (NEC), applicable local codes, and your specific site requirements.

The frame grounding connection to the power system shelf is made by using grounding washers with the mounting hardware used to secure the shelf to the relay rack or equipment cabinet. Refer to the system installation manual for a procedure. Ensure that the relay rack or equipment cabinet is properly grounded.

One set of frame grounding studs are also provided on the rear of the power system shelf. This provides for the installation of a lead with a two-hole lug that has 1/4" bolt clearance holes on 5/8" centers. Connect a frame grounding lead to the studs as required. Refer to Table 17 for lug selection. Refer to Figure 1 for location and recommended torque for this connection.

Recommended frame ground wire size is 6 AWG.

© 2026 Vertiv Group Corp. All Rights Reserved.

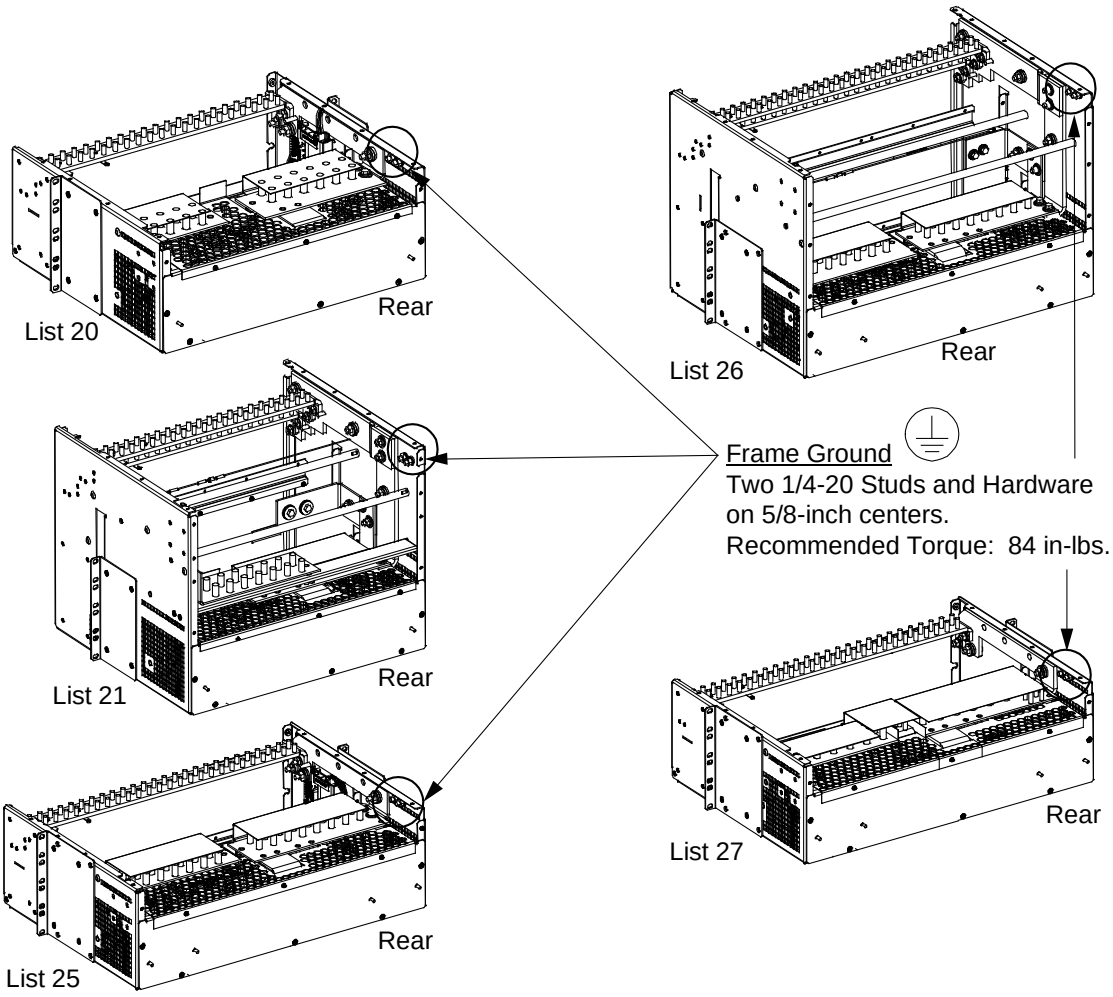

Figure 1
Power System Shelf Frame Ground Connection

Central Office Grounding Connection

Landing points are provided on the battery return bus for a central office ground lead (see Figure 31, Figure 32, Figure 33, Figure 34, or Figure 35). For central office grounding requirements, refer to the current edition of the American National Standards Institute (ANSI) approved National Fire Protection Association's (NFPA) National Electrical Code (NEC), applicable local codes, and your specific site requirements.

© 2026 Vertiv Group Corp. All Rights Reserved.

Rectifier AC Input Connections

To 19" Rectifier AC Input / Solar Converter DC Input Panel (List 40)

Refer to Table 23 for recommended wire sizes and branch circuit protection.

Refer to Figure 2 for an illustration.

Rectifier AC Input Connections to Rectifier AC Input / Solar Converter DC Input Panel (List 40) (Nominal 120 VAC / 208 VAC / 240 VAC, Single Phase, 50 Hz / 60 Hz) Provides Input Terminations for "One AC Feed per One Rectifier".						
Input Voltage	**Input Current** [5]	**Overcurrent Protection** [1]	**40 °C Ambient Temperature**		**65 °C Ambient Temperature**	
			Wire [2] [3] [4]	**Conduit Size (in)**	**Wire** [2] [3] [4]	**Conduit Size (in)**
120 VAC	9 A	15 A	14 AWG	3/4 [6], 1 [7, 8]	10 AWG	1 [6], 1-1/4 [7, 8]
208 VAC	10 A	15 A	14 AWG	3/4 [6], 1 [7, 8]	10 AWG	1 [6], 1-1/4 [7, 8]
240 VAC	8.7 A	15 A	14 AWG	3/4 [6], 1 [7, 8]	12 AWG	3/4 [6], 1 [7, 8]

[1] The AC input branch circuit protective device should be of the time-delay or high inrush type.

[2] Wire sizes based on recommendations of the American National Standards Institute (ANSI) approved National Fire Protection Association's (NFPA) National Electrical Code (NEC). Table 310.15 (B) (16) for copper wire at 90 °C conductor temperature. For operation in countries where the NEC is not recognized, follow applicable codes.

[3] Equipment grounding conductors must be provided with the AC input conductors supplied to the module mounting assembly. Frame ground terminals must be connected to earth ground, not power system neutral. Equipment grounding conductor size based on recommendations of the NEC Table 250-122 for copper wire. If aluminum or copper clad aluminum grounding conductor is used, refer to Table 250-122 for increased conductor size. For operation in countries where the NEC is not recognized, follow applicable codes.

[4] THHN 90°C Wire.

[5] Input current based on R48-2000e3 rectifier module.

[6] Single Conduit / Individually Fed: 6 PCUs (12 current and 1 ground wire) per conduit.

[7] Single Conduit / Individually Fed: 12 PCUs (24 current and 1 ground wire) per conduit.

[8] Single Conduit / Individually Fed: 15 PCUs (30 current and 1 ground wire) per conduit.

Table 23
Recommended AC Input Branch Circuit Protection and Wire Size
when Using Rectifier AC Input / Solar Converter DC Input Panel (List 40)

© 2026 Vertiv Group Corp. All Rights Reserved.

AC INPUT CONNECTIONS (582137100 List 40)
1 FEED PER 1 RECTIFIER, SINGLE PHASE

4	3	2	1	Controller
9	8	7	6	5
14	13	12	11	10
19	18	17	16	15
24	23	22	21	20

Module Mounting Assy. #1
Module Mounting Assy. #2
Module Mounting Assy. #3
Module Mounting Assy. #4
Module Mounting Assy. #5

Rectifier Module Mounting Slots (Rear View)

Note:
Wiring to a field installed module mounting assembly is done at the rear of the module mounting assembly.

Move divider left or right to separate rectifier AC input terminals from solar converter DC input terminals.

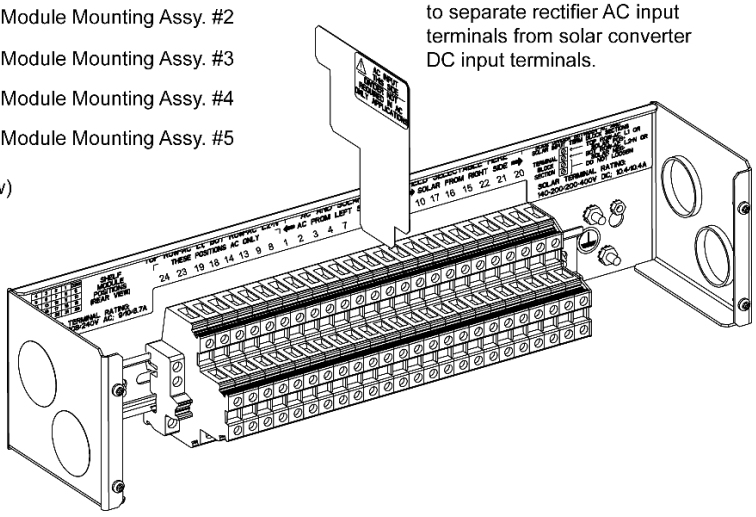

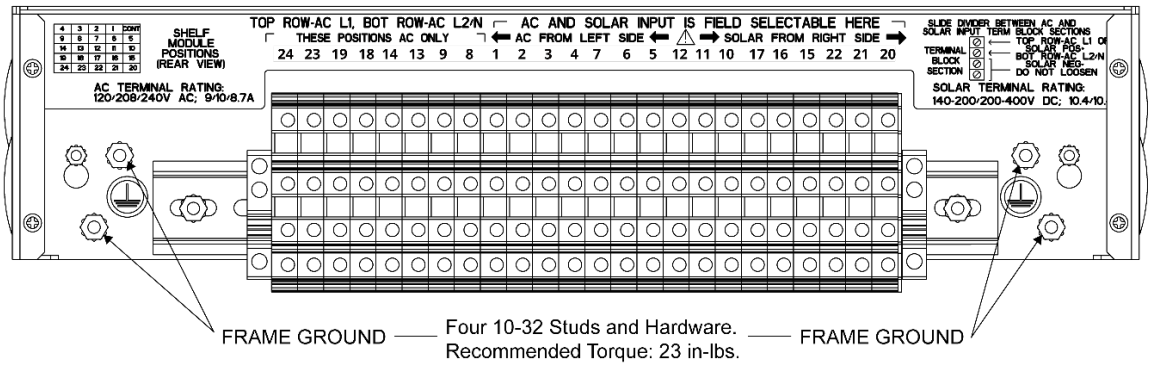

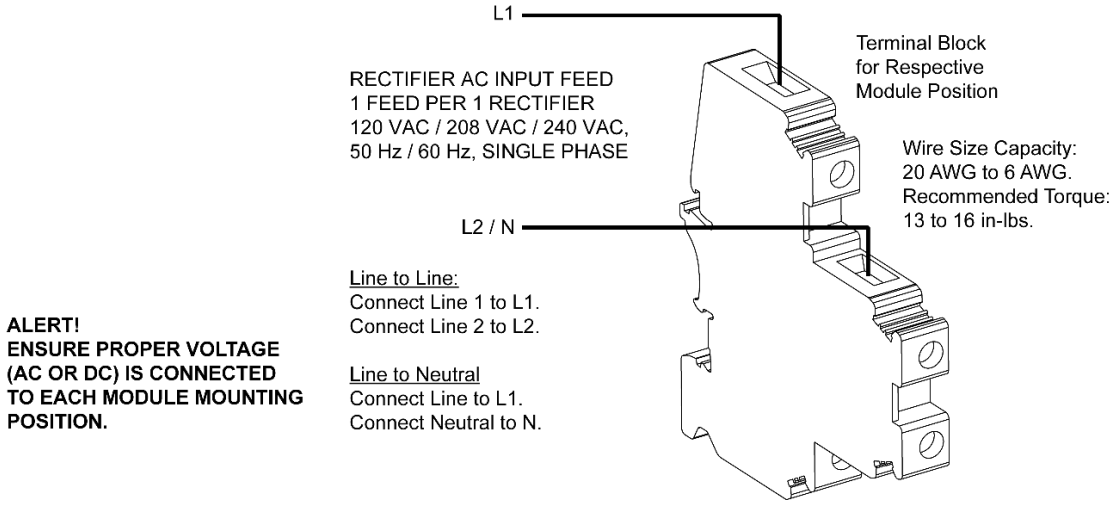

Figure 2
Rectifier AC Input Connections to
Rectifier AC Input / Solar Converter DC Input Panel (List 40)
(Nominal 120 VAC / 208 VAC / 240 VAC, Single Phase, 50 Hz / 60 Hz)

© 2026 Vertiv Group Corp. All Rights Reserved.

To 23" Rectifier AC Input / Solar Converter DC Input Panel (List 45)

Refer to Table 24 for recommended wire sizes and branch circuit protection.

Refer to Figure 3 for an illustration.

Rectifier AC Input Connections to Rectifier AC Input / Solar Converter DC Input Panel (List 45) (Nominal 120 VAC / 208 VAC / 240 VAC, Single Phase, 50 Hz / 60 Hz) Provides Input Terminations for "One AC Feed per One Rectifier".						
Input Voltage	**Input Current** [5]	**Overcurrent Protection** [1]	**40 °C Ambient Temperature**		**65 °C Ambient Temperature**	
			Wire [2] [3] [4]	**Conduit Size (in)**	**Wire** [2] [3] [4]	**Conduit Size (in)**
120 VAC	9 A	15 A	14 AWG	3/4 [6], 1 [7, 8]	10 AWG	1 [6], 1-1/4 [7, 8]
208 VAC	10 A	15 A	14 AWG	3/4 [6], 1 [7, 8]	10 AWG	1 [6], 1-1/4 [7, 8]
240 VAC	8.7 A	15 A	14 AWG	3/4 [6], 1 [7, 8]	12 AWG	3/4 [6], 1 [7, 8]

[1] The AC input branch circuit protective device should be of the time-delay or high inrush type.

[2] Wire sizes based on recommendations of the American National Standards Institute (ANSI) approved National Fire Protection Association's (NFPA) National Electrical Code (NEC). Table 310.15 (B) (16) for copper wire at 90 °C conductor temperature. For operation in countries where the NEC is not recognized, follow applicable codes.

[3] Equipment grounding conductors must be provided with the AC input conductors supplied to the module mounting assembly. Frame ground terminals must be connected to earth ground, not power system neutral. Equipment grounding conductor size based on recommendations of the NEC Table 250-122 for copper wire. If aluminum or copper clad aluminum grounding conductor is used, refer to Table 250-122 for increased conductor size. For operation in countries where the NEC is not recognized, follow applicable codes.

[4] THHN 90°C Wire.

[5] Input current based on R48-2000e3 rectifier module.

[6] Single Conduit / Individually Fed: 6 PCUs (12 current and 1 ground wire) per conduit.

[7] Single Conduit / Individually Fed: 12 PCUs (24 current and 1 ground wire) per conduit.

[8] Single Conduit / Individually Fed: 15 PCUs (30 current and 1 ground wire) per conduit.

Table 24
Recommended AC Input Branch Circuit Protection and Wire Size
when Using Rectifier AC Input / Solar Converter DC Input Panel (List 45)

© 2026 Vertiv Group Corp. All Rights Reserved.

AC INPUT CONNECTIONS (582137100 List 45)
1 FEED PER 1 RECTIFIER, SINGLE PHASE

5	4	3	2	1	Controller	Module Mounting Assy. #1
11	10	9	8	7	6	Module Mounting Assy. #2
17	16	15	14	13	12	Module Mounting Assy. #3
23	22	21	20	19	18	Module Mounting Assy. #4
29	28	27	26	25	24	Module Mounting Assy. #5

Rectifier Module Mounting Slots (Rear View)

Note:
Wiring to a field installed module mounting assembly is done at the rear of the module mounting assembly.

Move divider left or right to separate rectifier AC input terminals from solar converter DC input terminals.

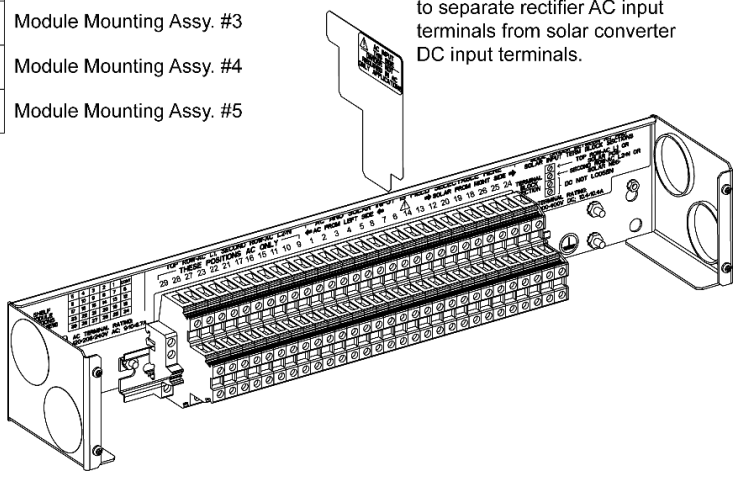

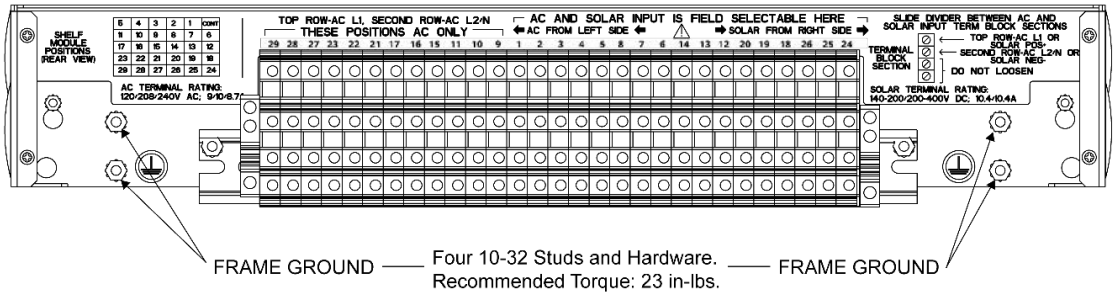

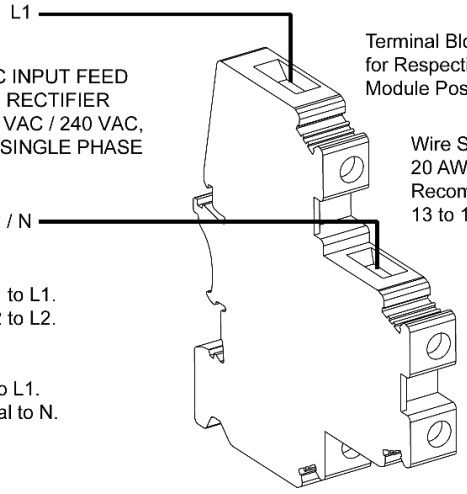

RECTIFIER AC INPUT FEED
1 FEED PER 1 RECTIFIER
120 VAC / 208 VAC / 240 VAC,
50 Hz / 60 Hz, SINGLE PHASE

Line to Line:
Connect Line 1 to L1.
Connect Line 2 to L2.

Line to Neutral
Connect Line to L1.
Connect Neutral to N.

ALERT!
ENSURE PROPER VOLTAGE (AC OR DC) IS CONNECTED TO EACH MODULE MOUNTING POSITION.

Figure 3
Rectifier AC Input Connections to
Rectifier AC Input / Solar Converter DC Input Panel (List 45)
(Nominal 120 VAC / 208 VAC / 240 VAC, Single Phase, 50 Hz / 60 Hz)

© 2026 Vertiv Group Corp. All Rights Reserved.

To 23" Rectifier AC Input Panel (List 46)

Refer to Table 25 for recommended wire sizes and branch circuit protection.

Refer to Figure 4 for an illustration.

See restrictions under List 46 on page 31.

Rectifier AC Input Connections to Rectifier AC Input Panel (List 46) (Nominal 120 VAC / 208 VAC / 240 VAC, Single Phase, 50 Hz / 60 Hz) Provides Input Terminations for "One AC Feed per Two Rectifiers".						
Input Voltage	**Input Current (5)**	**Overcurrent Protection (1)**	**40 °C Ambient Temperature**		**65 °C Ambient Temperature**	
			Wire (2) (3) (4)	**Conduit Size (in)**	**Wire (2) (3) (4)**	**Conduit Size (in)**
120 VAC	18.5 A	25 A (6)	8 AWG	1-1/4 (7, 8, 9)	6 AWG	1-1/4 (7, 8, 9)
208 VAC	20 A	25 A (6)	8 AWG	1-1/4 (7, 8, 9)	6 AWG	1-1/4 (7, 8, 9)
240 VAC	17.5 A	25 A (6)	8 AWG	1-1/4 (7, 8, 9)	6 AWG	1-1/4 (7, 8, 9)

1 The AC input branch circuit protective device should be of the time-delay or high inrush type.

2 Wire sizes based on recommendations of the American National Standards Institute (ANSI) approved National Fire Protection Association's (NFPA) National Electrical Code (NEC). Table 310.15 (B) (16) for copper wire at 90 °C conductor temperature. For operation in countries where the NEC is not recognized, follow applicable codes.

3 Equipment grounding conductors must be provided with the AC input conductors supplied to the module mounting assembly. Frame ground terminals must be connected to earth ground, not power system neutral. Equipment grounding conductor size based on recommendations of the NEC Table 250-122 for copper wire. If aluminum or copper clad aluminum grounding conductor is used, refer to Table 250-122 for increased conductor size. For operation in countries where the NEC is not recognized, follow applicable codes.

4 THHN 90°C Wire.

5 Input current based on R48-2000e3 rectifier module.

6 Maximum OCPD is 30 A in a 40 °C ambient.

7 The conduit is sized for a maximum of ten (10) current carrying conductors.

8 Each AC input feed provides power for two (2) rectifier modules.

9 One conduit provides AC power to a maximum of ten (10) PCUs (10 current and 1 ground wire) per conduit.

Table 25
Recommended AC Input Branch Circuit Protection and Wire Size
when Using Rectifier AC Input Panel (List 46)

© 2026 Vertiv Group Corp. All Rights Reserved.

AC INPUT CONNECTIONS (582137100 List 46)
1 FEED PER 2 RECTIFIERS, SINGLE PHASE

5	4	3	2	1	Controller	Module Mounting Assy. #1
11	10	9	8	7	6	Module Mounting Assy. #2
17	16	15	14	13	12	Module Mounting Assy. #3

Rectifier Module Mounting Slots (Rear View)

Note:
Wiring to a field installed module mounting assembly is done at the rear of the module mounting assembly.

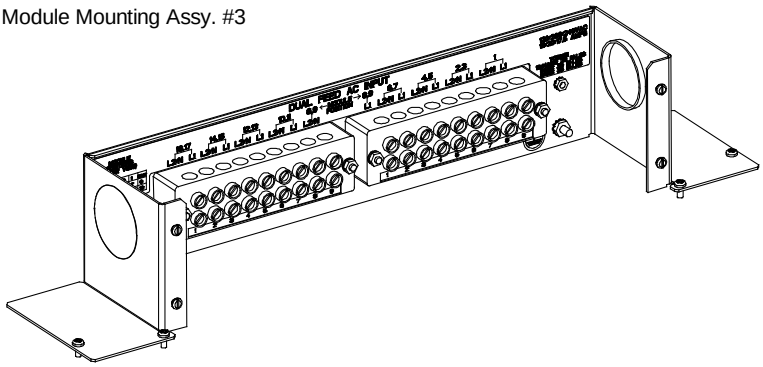

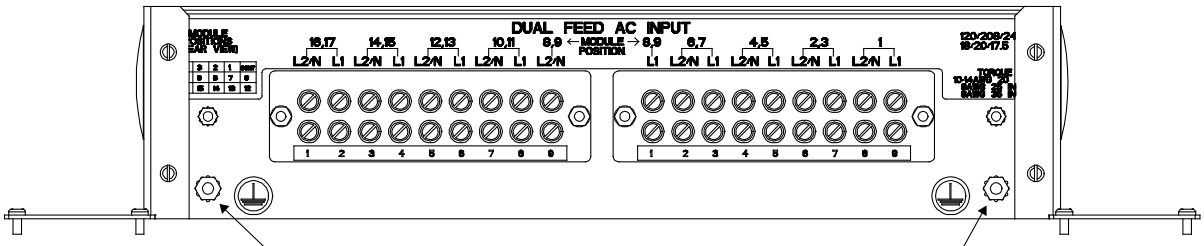

FRAME GROUND —— Two 10-32 Studs and Hardware. Recommended Torque: 23 in-lbs. —— FRAME GROUND

Line to Line:
Connect Line 1 to L1.
Connect Line 2 to L2.

Line to Neutral
Connect Line to L1.
Connect Neutral to N.

RECTIFIER AC INPUT FEEDS
1 FEED PER 2 RECTIFIERS
120 VAC / 208 VAC / 240 VAC,
50 Hz / 60 Hz, SINGLE PHASE

Wire Size Capacity and Torque:
10 AWG to 14 AWG; 20 in-lbs.
8 AWG; 25 in-lbs.
6 AWG; 35 in-lbs.

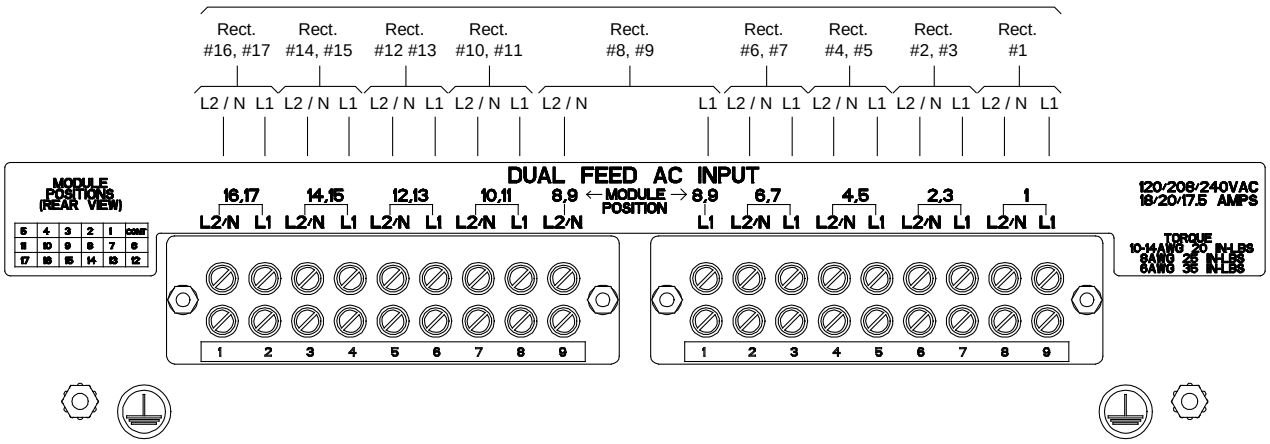

Figure 4
Rectifier AC Input Connections to
Rectifier AC Input (List 46)
(Nominal 120 VAC / 208 VAC / 240 VAC, Single Phase, 50 Hz / 60 Hz)

© 2026 Vertiv Group Corp. All Rights Reserved.

To 588705300 Module Shelves Equipped with Molex Connectors and Provided with Rectifier AC Input Cable Assemblies or Rectifier AC Input Line Cords

Recommended Rectifier AC Input Branch Circuit Protection (Nominal 120 VAC / 208 VAC / 240 VAC, Single Phase, 50 Hz / 60 Hz) INPUT CABLE ASSEMBLIES (ONE AC INPUT BRANCH CIRCUIT PER TWO RECTIFIER MODULES)		
Input Voltage	**Input Current [2]**	**Overcurrent Protection [1]**
120 VAC	18 A	25 A
208 VAC	20 A	25 A
240 VAC	17.5 A	25 A

[1] The AC input branch circuit protective device should be of the time-delay or high inrush type.

[2] Input current based on R48-2000e3 rectifier module.

Table 26
Recommended Rectifier AC Input Branch Circuit Protection
(Nominal 120 VAC / 208 VAC / 240 VAC, Single Phase, 50 Hz / 60 Hz)
SUPPLIED INPUT CABLE ASSEMBLIES

Recommended Rectifier AC Input Branch Circuit Protection (Nominal 120 VAC / 208 VAC / 240 VAC, Single Phase, 50 Hz / 60 Hz) AC INPUT LINE CORDS (ONE AC INPUT BRANCH CIRCUIT PER TWO RECTIFIER MODULES)		
Input Voltage	**Input Current [2]**	**Overcurrent Protection [1]**
120 VAC	18 A	30 A
208 VAC	20 A	30 A
240 VAC	17.5 A	30 A

[1] The AC input branch circuit protective device should be of the time-delay or high inrush type.

[2] Input current based on R48-2000e3 rectifier module.

Table 27
Recommended Rectifier AC Input Branch Circuit Protection
(Nominal 120 VAC / 208 VAC / 240 VAC, Single Phase, 50 Hz / 60 Hz)
SUPPLIED AC INPUT LINE CORDS

© 2026 Vertiv Group Corp. All Rights Reserved.

Solar Converter DC Input Connections

To 19" Rectifier AC Input / Solar Converter DC Input Panel (List 40)

Refer to Table 28 for recommended wire sizes and branch circuit protection.

Refer to Figure 5 for an illustration.

Solar Converter DC Input Connections to Rectifier AC Input / Solar Converter DC Input Panel (List 40) (140 VDC to 200 VDC / 200 VDC to 400 VDC) Provides Input Terminations for "One DC Feed per One Solar Converter".						
Input Voltage	**Input Current** [4]	**Overcurrent Protection** [1]	**40 °C Ambient Temperature**		**65 °C Ambient Temperature**	
			Wire [2] [3]	**Conduit Size (in)**	**Wire** [2] [3]	**Conduit Size (in)**
140 VDC to 200 VDC	10.5 A	15 A	14 AWG [5] 12 AWG [6, 7]	3/4 [5] 1 [6] 1-1/4 [7]	10 AWG	1 [5], 1-1/4 [6, 7]
200 VDC to 400 VDC	10.5 A	15 A	14 AWG [5] 12 AWG [6, 7]	3/4 [5] 1 [6] 1-1/4 [7]	10 AWG	1 [5], 1-1/4 [6, 7]

[1] The DC input branch circuit protective device should be of the time-delay or high inrush type.

[2] Wire sizes based on recommendations of the American National Standards Institute (ANSI) approved National Fire Protection Association's (NFPA) National Electrical Code (NEC). Table 310.15 (B) (16) for copper wire at 90 °C conductor temperature. For operation in countries where the NEC is not recognized, follow applicable codes.

[3] THHN 90°C Wire.

[4] Input current based on S48-2000e3 solar converter module.

[5] Single Conduit / Individually Fed: 6 Solar Converters (12 current and 1 ground wire) per conduit.

[6] Single Conduit / Individually Fed: 12 Solar Converters (24 current and 1 ground wire) per conduit.

[7] Single Conduit / Individually Fed: 15 Solar Converters (30 current and 1 ground wire) per conduit.

Table 28
Recommended DC Input Branch Circuit Protection and Wire Size
when Using Rectifier AC Input / Solar Converter DC Input Panel (List 40)

© 2026 Vertiv Group Corp. All Rights Reserved.

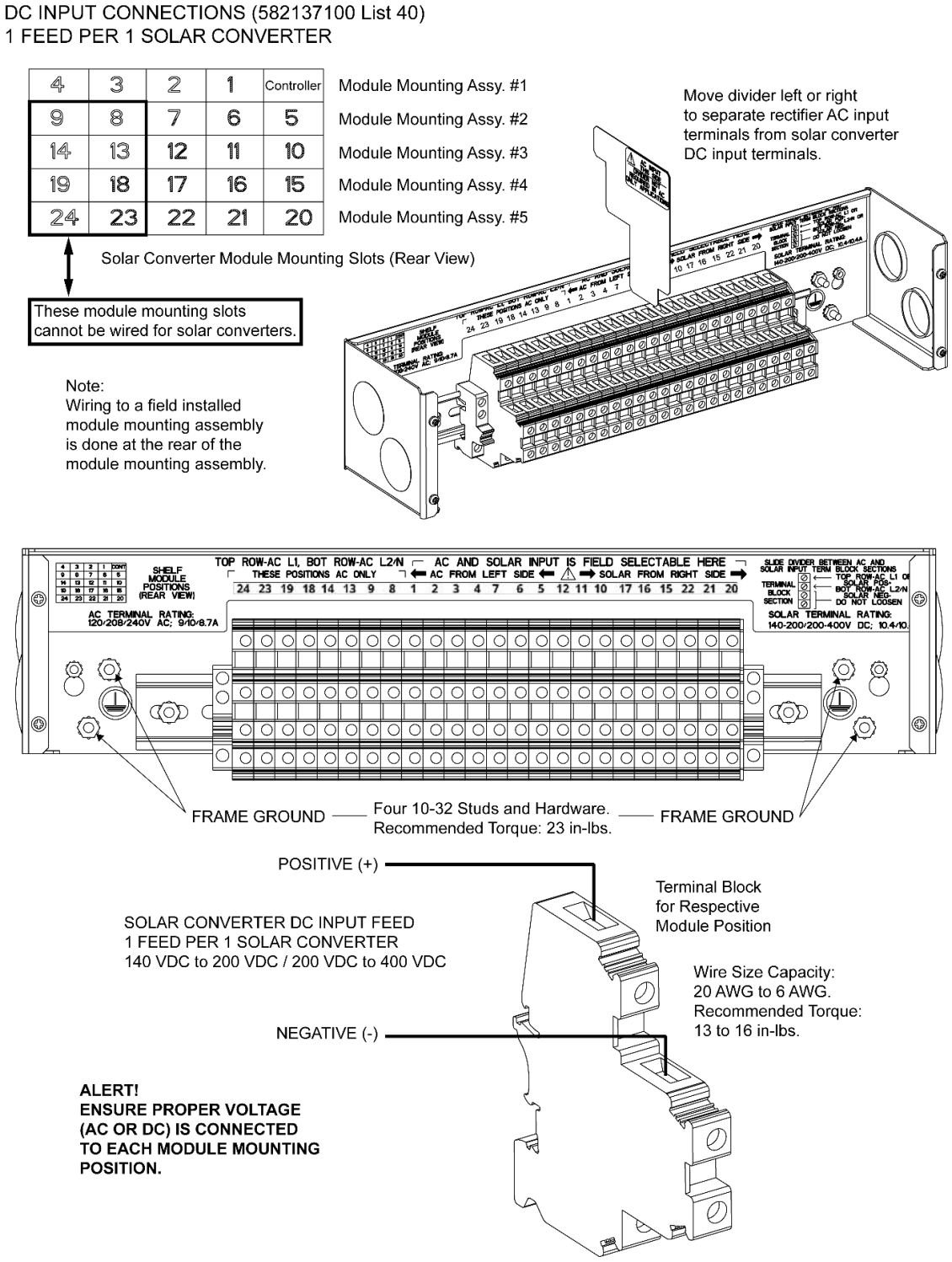

Figure 5
Solar Converter DC Input Connections to
Rectifier AC Input / Solar Converter DC Input Panel (List 40)
(140 VDC to 200 VDC / 200 VDC to 400 VDC)

© 2026 Vertiv Group Corp. All Rights Reserved.

To 23" Rectifier AC Input / Solar Converter DC Input Panel (List 45)

Refer to Table 29 for recommended wire sizes and branch circuit protection.

Refer to Figure 6 for an illustration.

Solar Converter DC Input Connections to Rectifier AC Input / Solar Converter DC Input Panel (List 45) (140 VDC to 200 VDC / 200 VDC to 400 VDC) Provides Input Terminations for "One DC Feed per One Solar Converter".						
Input Voltage	**Input Current** (4)	**Overcurrent Protection** (1)	**40 °C Ambient Temperature**		**65 °C Ambient Temperature**	
			Wire (2) (3)	**Conduit Size (in)**	**Wire** (2) (3)	**Conduit Size (in)**
140 VDC to 200 VDC	10.5 A	15 A	14 AWG (5) 12 AWG (6, 7)	3/4 (5) 1 (6) 1-1/4 (7)	10 AWG	1 (5), 1-1/4 (6, 7)
200 VDC to 400 VDC	10.5 A	15 A	14 AWG (5) 12 AWG (6, 7)	3/4 (5) 1 (6) 1-1/4 (7)	10 AWG	1 (5), 1-1/4 (6, 7)

1 The DC input branch circuit protective device should be of the time-delay or high inrush type.

2 Wire sizes based on recommendations of the American National Standards Institute (ANSI) approved National Fire Protection Association's (NFPA) National Electrical Code (NEC). Table 310.15 (B) (16) for copper wire at 90 °C conductor temperature. For operation in countries where the NEC is not recognized, follow applicable codes.

3 THHN 90°C Wire.

4 Input current based on S48-2000e3 rectifier module.

5 Single Conduit / Individually Fed: 6 Solar Converters (12 current and 1 ground wire) per conduit.

6 Single Conduit / Individually Fed: 12 Solar Converters (24 current and 1 ground wire) per conduit.

7 Single Conduit / Individually Fed: 15 Solar Converters (30 current and 1 ground wire) per conduit.

Table 29
Recommended DC Input Branch Circuit Protection and Wire Size
when Using Rectifier AC Input / Solar Converter DC Input Panel (List 45)

© 2026 Vertiv Group Corp. All Rights Reserved.

DC INPUT CONNECTIONS (582137100 List 45)
1 FEED PER 1 SOLAR CONVERTER

5	4	3	2	1	Controller	Module Mounting Assy. #1
11	10	9	8	7	6	Module Mounting Assy. #2
17	16	15	14	13	12	Module Mounting Assy. #3
23	22	21	20	19	18	Module Mounting Assy. #4
29	28	27	26	25	24	Module Mounting Assy. #5

Solar Converter Module Mounting Slots (Rear View)

These module mounting slots cannot be wired for solar converters.

Note:
Wiring to a field installed module mounting assembly is done at the rear of the module mounting assembly.

Move divider left or right to separate rectifier AC input terminals from solar converter DC input terminals.

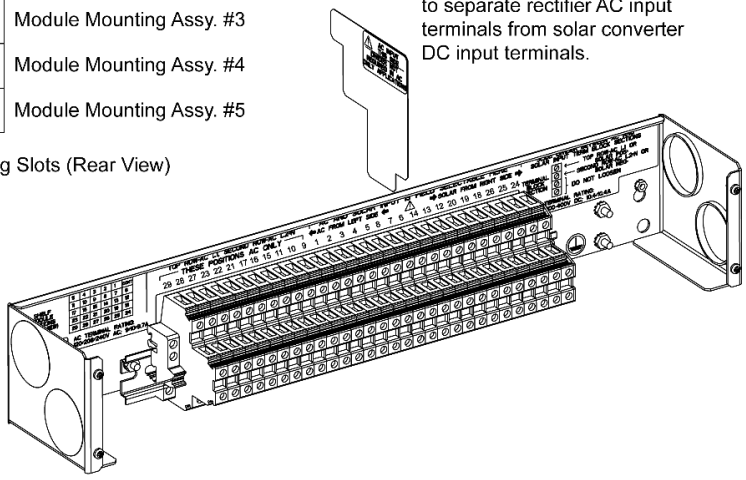

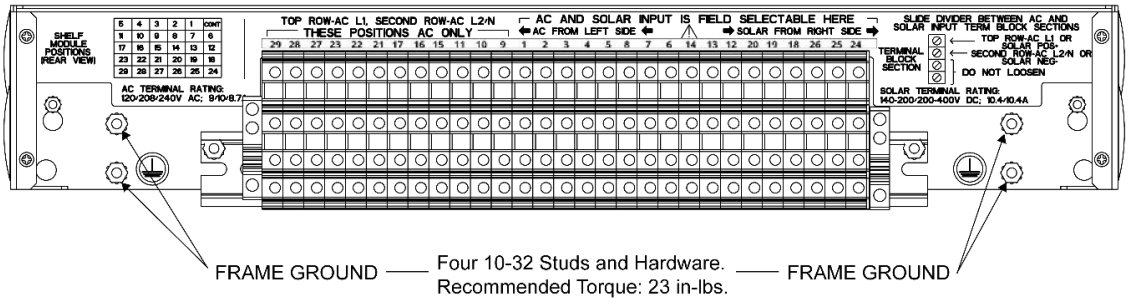

FRAME GROUND —— Four 10-32 Studs and Hardware. Recommended Torque: 23 in-lbs. —— FRAME GROUND

POSITIVE (+)

SOLAR CONVERTER DC INPUT FEED
1 FEED PER 1 SOLAR CONVERTER
140 VDC to 200 VDC / 200 VDC to 400 VDC

NEGATIVE (-)

Terminal Block for Respective Module Position

Wire Size Capacity:
20 AWG to 6 AWG.
Recommended Torque:
13 to 16 in-lbs.

ALERT!
ENSURE PROPER VOLTAGE (AC OR DC) IS CONNECTED TO EACH MODULE MOUNTING POSITION.

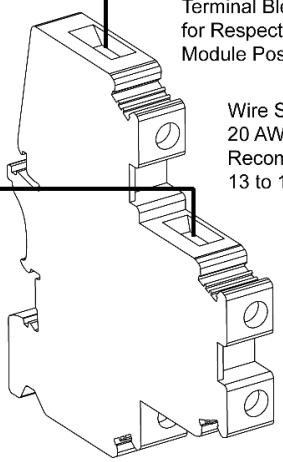

Figure 6
Solar Converter DC Input Connections to
Rectifier AC Input / Solar Converter DC Input Panel (List 45)
(140 VDC to 200 VDC / 200 VDC to 400 VDC)

© 2026 Vertiv Group Corp. All Rights Reserved.

To Solar Connection Cabinet (List 61)

Refer to Table 30 for recommended wire sizes and branch circuit protection.

Refer to Figure 7 for an illustration.

Solar Converter DC Input Connections to Solar Connection Cabinet (List 61) (140 VDC to 200 VDC / 200 VDC to 400 VDC) Provides Input Terminations for "One DC Feed per One Solar Converter".						
Input Voltage	**Input Current** [4]	**Overcurrent Protection** [1]	**40 °C Ambient Temperature**		**65 °C Ambient Temperature**	
			Wire [2] [3]	**Conduit Size (in)** [5]	**Wire** [2] [3]	**Conduit Size (in)** [5]
140 VDC to 200 VDC	10.5 A	15 A	14 AWG	3/4	10 AWG	1
200 VDC to 400 VDC	10.5 A	15 A	14 AWG	3/4	10 AWG	1

1 The DC input branch circuit protective device should be of the time-delay or high inrush type.

2 Wire sizes based on recommendations of the American National Standards Institute (ANSI) approved National Fire Protection Association's (NFPA) National Electrical Code (NEC). Table 310.15 (B) (16) for copper wire at 90 °C conductor temperature. For operation in countries where the NEC is not recognized, follow applicable codes.

3 THHN 90°C Wire.

4 Input current based on S48-2000e3 solar converter module.

5 Single Conduit / Individually Fed: 8 Solar Converters (16 current and 1 ground wire) per conduit.

Table 30
Recommended DC Input Branch Circuit Protection and Wire Size
when Using Solar Connection Cabinet (List 61)

© 2026 Vertiv Group Corp. All Rights Reserved.

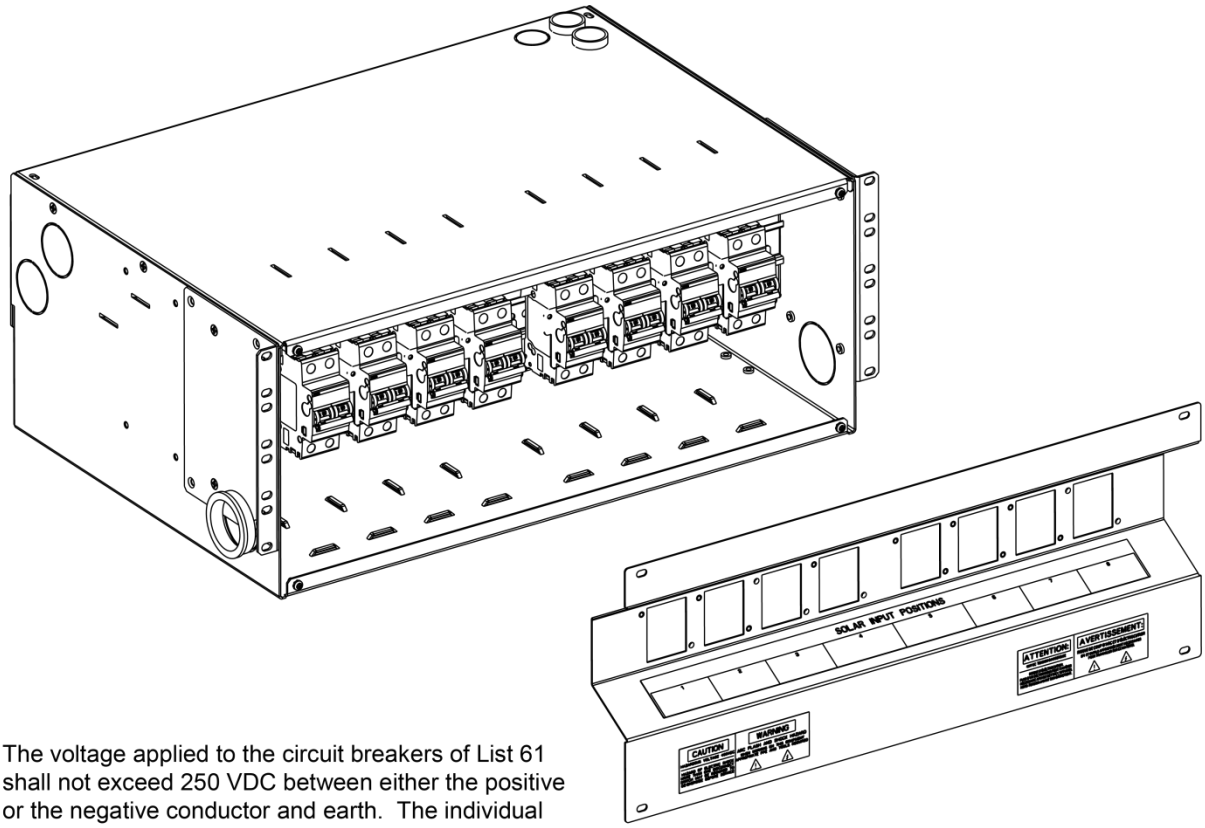

The voltage applied to the circuit breakers of List 61 shall not exceed 250 VDC between either the positive or the negative conductor and earth. The individual poles of the circuit breaker are rated for a maximum of 250 VDC.

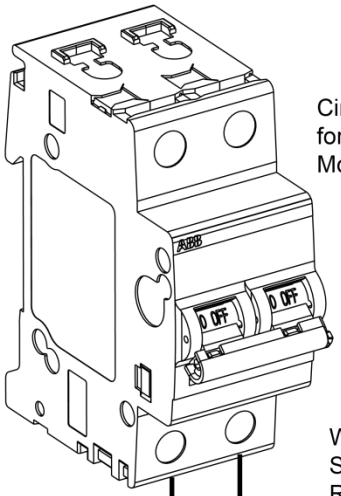

Circuit Breaker
for Respective
Module Position

SOLAR CONVERTER DC INPUT FEED
1 FEED PER 1 SOLAR CONVERTER
140 VDC to 200 VDC / 200 VDC to 400 VDC

POSITIVE (+)

NEGATIVE (-)

Wire Size Capacity: 14 AWG to 4 AWG.
Strip Length: 0.38 inch.
Recommended Torque: 18 in-lbs.
Tool: #2 pozidrive screwdriver.

Figure 7
Solar Converter DC Input Connections to
Solar Connection Cabinet (List 61)
(140 VDC to 200 VDC / 200 VDC to 400 VDC)

© 2026 Vertiv Group Corp. All Rights Reserved.

Optional Inverter System AC Input Connections (List 50, 51, 52, 53, 54, 55, 56, 57)

Inverter System AC Input Connections

Inverter System AC Input Branch Circuit Protection and Wire Size Selection (Nominal 120 VAC, Single Phase, 50 Hz / 60 Hz)

Refer to the following table for recommended wire sizes and branch circuit protection. Refer to Figure 8 for an illustration.

Spec. No. 582137100 Lists 50, 51, 52, 53, 54, 55, 56, and 57 Inverter System Recommended AC Input Branch Circuit Protection and Wire Size Provides Input Terminations for "One AC Feed per Inverter System" (Nominal 120 VAC, Single Phase, 50 Hz / 60 Hz)							
List Number	Input Voltage	Input Current	Overcurrent Protection [1]		Conductor Wire Size [2] [3] [4]	EGC Wire Size	Conduit Size (in)
			OCPD Minimum	OCPD Maximum			
40 °C and 65 °C Ambient Temperature [5]							
List 50 List 51	120 VAC	45 A	60 A	70 A	6 AWG	10 AWG	3/4"
List 52 List 53	120 VAC	54 A	70 A	90 A	4 AWG	8 AWG	3/4"
List 54 List 55	120 VAC	90 A	125 A	125 A	2 AWG	6 AWG	1-1/4"
List 56 List 57	120 VAC	108 A	150 A	150 A	1/0 AWG	6 AWG	1-1/4"

[1] The AC input branch circuit protective device should be of the time-delay or high inrush type.

[2] Wire sizes based on recommendations of the American National Standards Institute (ANSI) approved National Fire Protection Association's (NFPA) National Electrical Code (NEC). Table 310.15 (B) (16) for copper wire at 90 °C conductor temperature. For operation in countries where the NEC is not recognized, follow applicable codes.

[3] Equipment grounding conductors must be provided with the AC input conductors supplied to the module mounting assembly. Frame ground terminals must be connected to earth ground, not power system neutral. Equipment grounding conductor size based on recommendations of the NEC Table 250-122 for copper wire. If aluminum or copper clad aluminum grounding conductor is used, refer to Table 250-122 for increased conductor size. For operation in countries where the NEC is not recognized, follow applicable codes.

[4] THHN 90°C Wire.

[5] Table values are based on full-power operation of inverter modules at 40 °C ambient temperature. For systems designed to operate in a 65 °C ambient environment, wire the system using the OCPD and field-wiring sizes as recommended for 40 °C ambient temperature due to the linear power derating of the inverter module between 45 °C and 65 °C. Refer to Section 1.2.1 (AC Input Ratings) and Figure 1.1 (Power Derating Based on Temperature) of the Inverter Module User Manual (UMI1201000).

If NEC calculations for field-wiring at 65 °C indicate that a larger wire gauge should be used vs. the 40 °C wire gauge, then the calculated 65 °C gauge should be used. However, the power derating of the inverter modules should outpace any increase in gauge due to NEC wire derating.

Table 31
Spec. No. 582137100 Lists 50, 51, 52, 53, 54, 55, 56, and 57
Optional Inverter System Recommended AC Input Branch Circuit Protection and Wire Size

© 2026 Vertiv Group Corp. All Rights Reserved.

Inverter System AC Input Connections Illustration (Nominal 120 VAC, Single Phase, 50 Hz / 60 Hz)

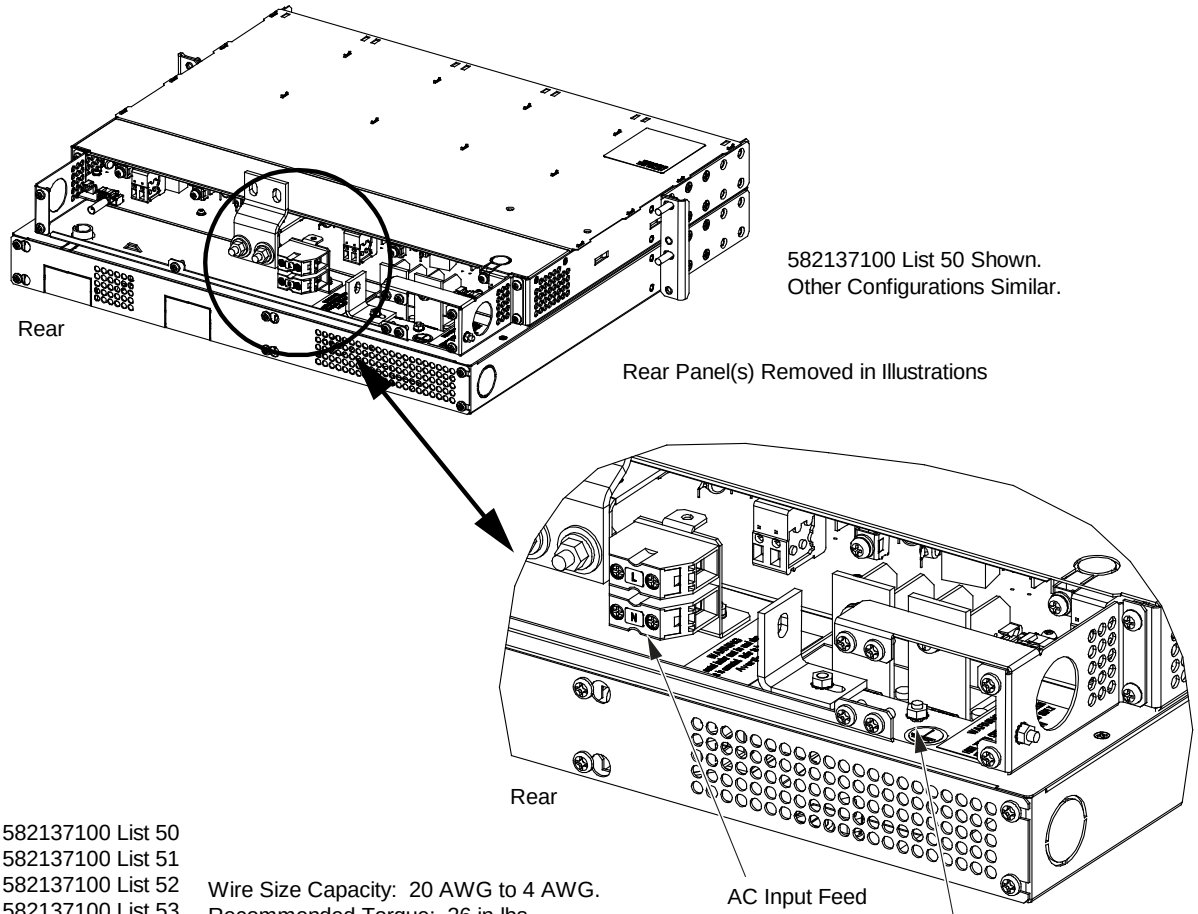

Figure 8
Optional Inverter System AC Input Connections (List 50, 51, 52, 53, 54, 55, 56, 57)

© 2026 Vertiv Group Corp. All Rights Reserved.

Optional Inverter System AC Output Connections (List 50, 51, 52, 53, 54, 55, 56, 57)

Inverter System AC Output Connections (List 50, 52, 54, 56)

Inverter System AC Output Branch Circuit Protection and Wire Size Selection When Equipped with List 50, 52, 54, 56

Refer to Table 32 and Table 33 for recommended wire sizes and branch circuit protection. Refer to Figure 9 for an illustration. Each 120 VAC output is protected by a 70 A circuit breaker located on the front of the unit.

Spec. No. List 50, 52 Inverter System Recommended AC Output Branch Circuit Protection and Wire Size 1RU AC Termination Panel with One (1) 70 A Overcurrent Protection Device (Nominal 120 VAC, Single Phase, 50 Hz / 60 Hz)						
Output Voltage	Output Current	Overcurrent Protection	40 °C Ambient Temperature		65 °C Ambient Temperature	
			Wire [3] [4]	Conduit Size (in) [5]	Wire [3] [4]	Conduit Size (in) [5]
120 VAC	50 A Note 1	70 A	6 AWG	3/4	4 AWG	1 Note 2

[1] Output current determined as 50 A max (50 A X 120 VAC = 6kVA rating) for the AC distribution panel.

[2] The equipment grounding conductor can be 8 AWG minimum. If the installation uses two (2) 4 AWG cables and an 8 AWG ground cable, then 3/4-inch conduit is permissible. If the equipment grounding conductor is equivalent in size to the 4 AWG current carrying cables, then a 1-inch conduit is required and cannot be accommodated on the 1RU AC distribution panel.

[3] Wire sizes based on recommendations of the American National Standards Institute (ANSI) approved National Fire Protection Association's (NFPA) National Electrical Code (NEC). Table 310.15 (B) (16) for copper wire at 90 °C conductor temperature. For operation in countries where the NEC is not recognized, follow applicable codes.

[4] THHN 90°C Wire.

[5] Two current and one ground wire per conduit (one AC output conduit).

Table 32
Inverter System Recommended AC Output Branch Circuit Protection and Wire Size (List 50, 52)

© 2026 Vertiv Group Corp. All Rights Reserved.

Spec. No. List 54, 56 Inverter System Recommended AC Output Branch Circuit Protection and Wire Size 2RU AC Termination Panel with Two (2) 70 A Overcurrent Protection Devices (Nominal 120 VAC, Single Phase, 50 Hz / 60 Hz)						
Output Voltage	Output Current	Overcurrent Protection	40 °C Ambient Temperature		65 °C Ambient Temperature	
			Wire [3] [4]	Conduit Size (in) [5]	Wire [3] [4]	Conduit Size (in) [5]
120 VAC	56 A Note 1	70 A	4 AWG	1 Note 2	4 AWG	1 Note 2

1 Output current determined as 80% of the 70 A breaker that is being used in the AC distribution panel.

2 The equipment grounding conductor can be 8 AWG minimum. If the installation uses two (2) 4 AWG cables and an 8 AWG ground cable, then 3/4-inch conduit is permissible. If the equipment grounding conductor is equivalent in size to the 4 AWG current carrying cables, then a 1-inch conduit is required.

3 Wire sizes based on recommendations of the American National Standards Institute (ANSI) approved National Fire Protection Association's (NFPA) National Electrical Code (NEC). Table 310.15 (B) (16) for copper wire at 90 °C conductor temperature. For operation in countries where the NEC is not recognized, follow applicable codes.

4 THHN 90°C Wire.

5 Two current and one ground wire per conduit (two AC output conduits).

Table 33
Inverter System Recommended AC Output Branch Circuit Protection and Wire Size (List 54, 56)

© 2026 Vertiv Group Corp. All Rights Reserved.

Inverter System AC Output Connections Illustration (List 50, 52, 54, 56)

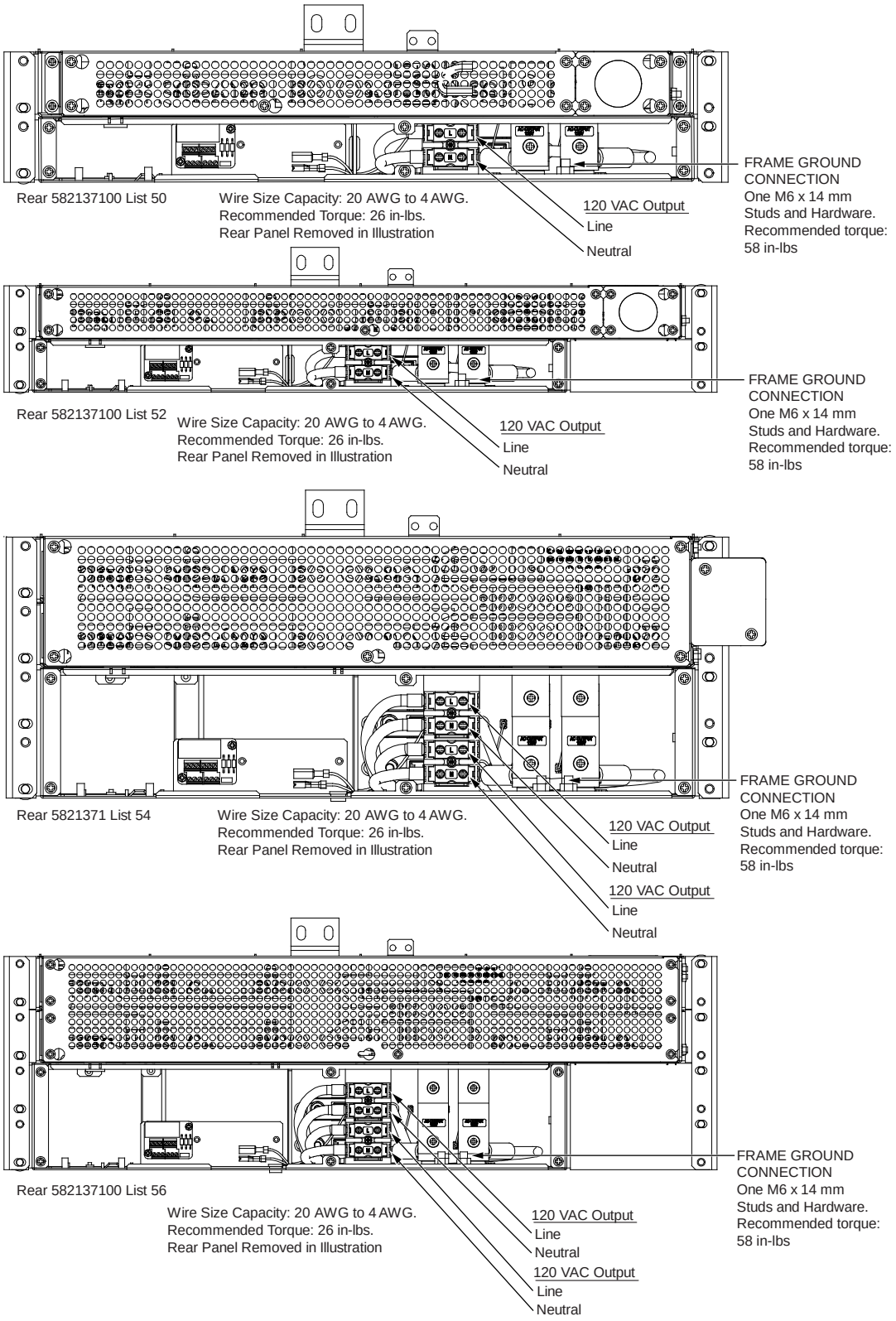

Figure 9
Inverter System AC Output Connections (List 50, 52, 54, 56)

© 2026 Vertiv Group Corp. All Rights Reserved.

Inverter System AC Output Connections (List 51, 53, 55, 57)

The 1RU and 2RU AC distribution panels with 15A NEMA / IEC connectors are automatically field wired via the line cords that connect to the NEMA / IEC outlets. Refer to Figure 10 for an illustration of the NEMA panel.

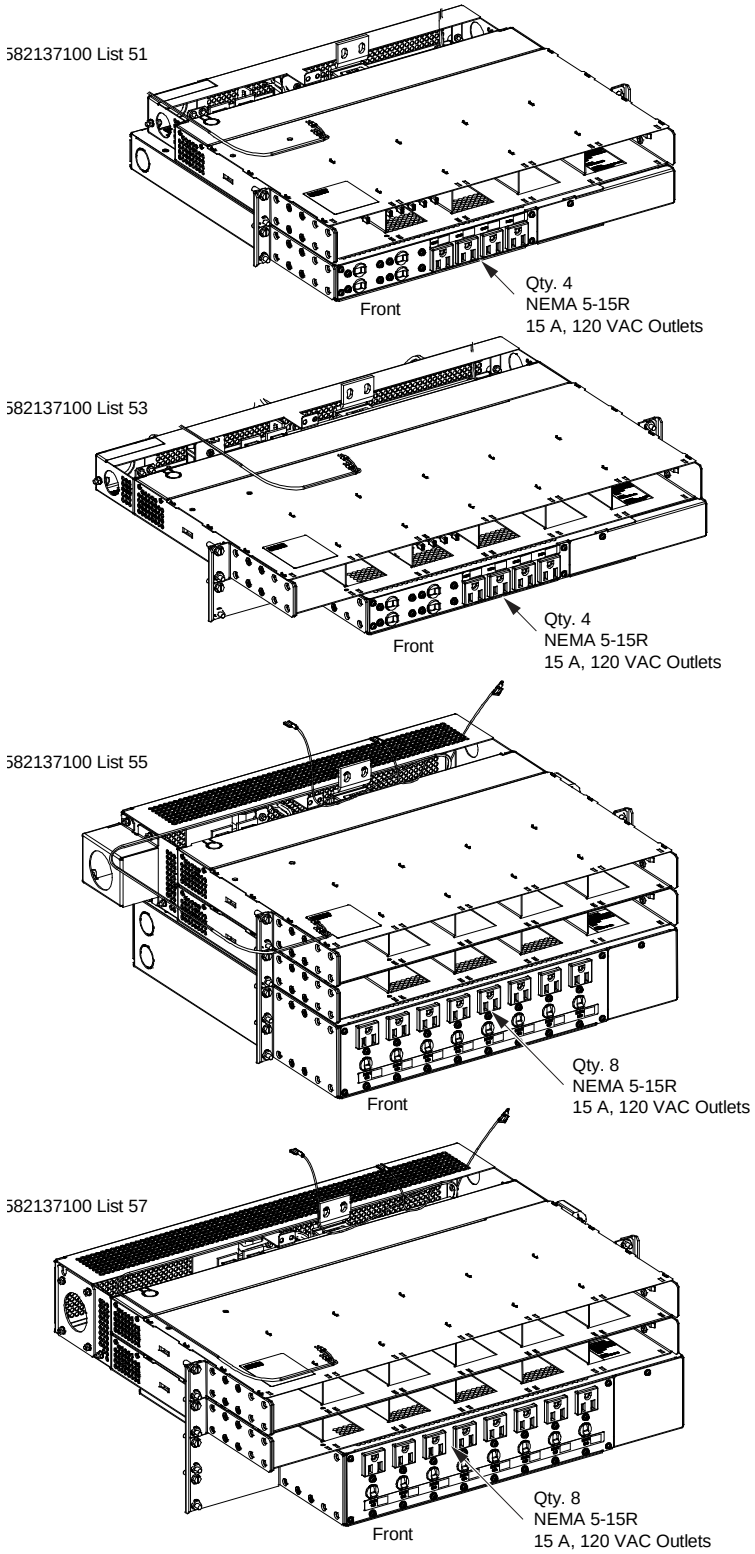

Figure 10
Inverter System AC Output Connections (List 51, 53, 55, 57)

© 2026 Vertiv Group Corp. All Rights Reserved.

External Alarm, Reference, Monitoring, and Control Connections

General

Recommended wire size is 22 AWG for loop lengths up to 200 ft. and 18 AWG to 20 AWG for loop lengths over 200 ft.

582137100 List 20, List 25 Distribution Cabinet

Refer to Figure 11.

582137100 List 21, List 26 Distribution Cabinet

Refer to Figure 12.

582137100 List 27 Distribution Cabinet

Refer to Figure 13.

IB2 (Controller Interface Board)

Refer to Figure 14.

Optional EIB (Controller Extended Interface Board)

Refer to Figure 15.

System Interface Board

Refer to Figure 16.

© 2026 Vertiv Group Corp. All Rights Reserved.

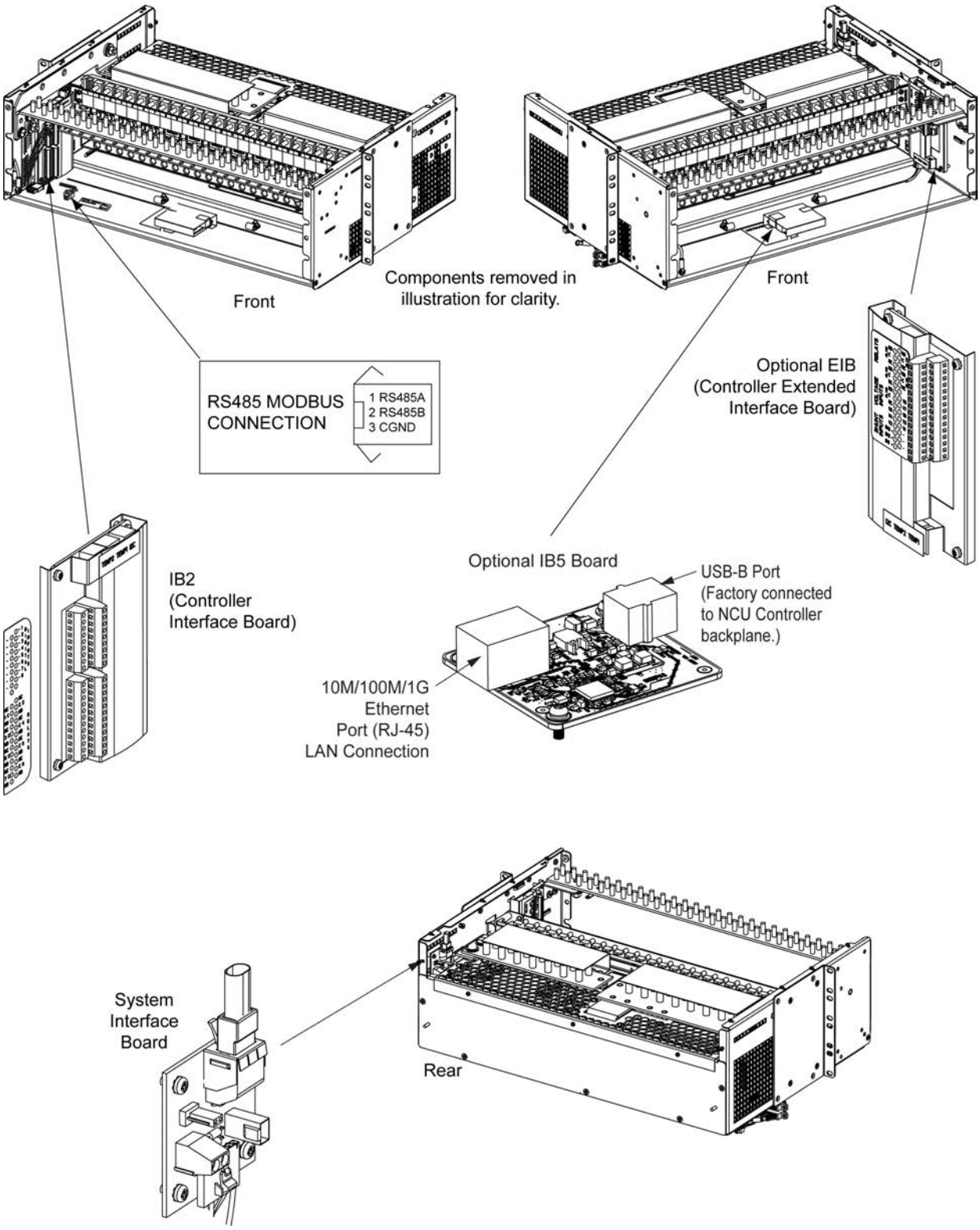

Figure 11
External Alarm, Reference, Monitoring, and Control Connections Locations in a 582137100 List 20, List 25 Distribution Cabinet

© 2026 Vertiv Group Corp. All Rights Reserved.

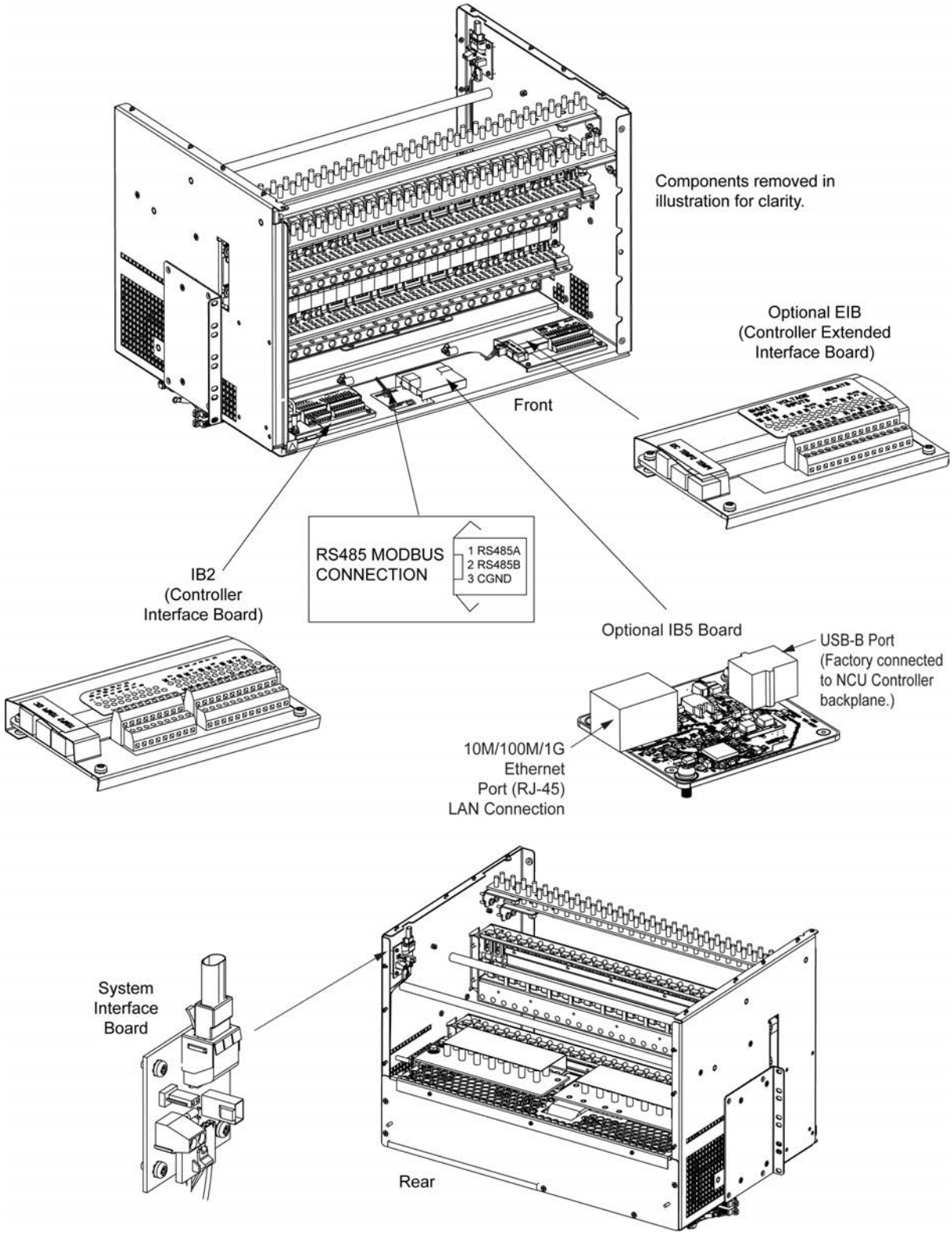

Figure 12
External Alarm, Reference, Monitoring, and Control Connections Locations in a 582137100 List 21, List 26 Distribution Cabinet

© 2026 Vertiv Group Corp. All Rights Reserved.

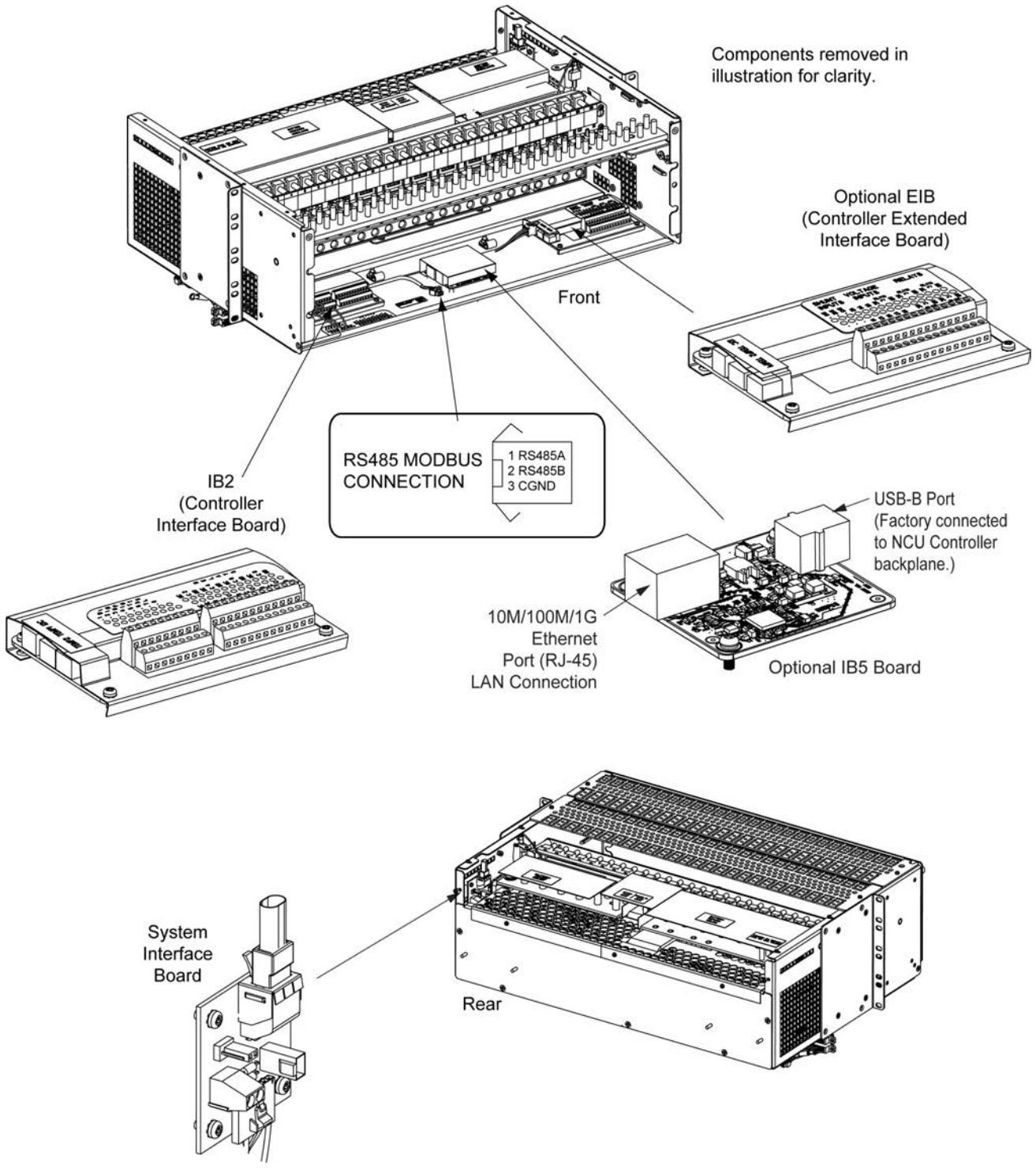

Figure 13
External Alarm, Reference, Monitoring, and Control Connections Locations in a 582137100 List 27 Distribution Cabinet

© 2026 Vertiv Group Corp. All Rights Reserved.

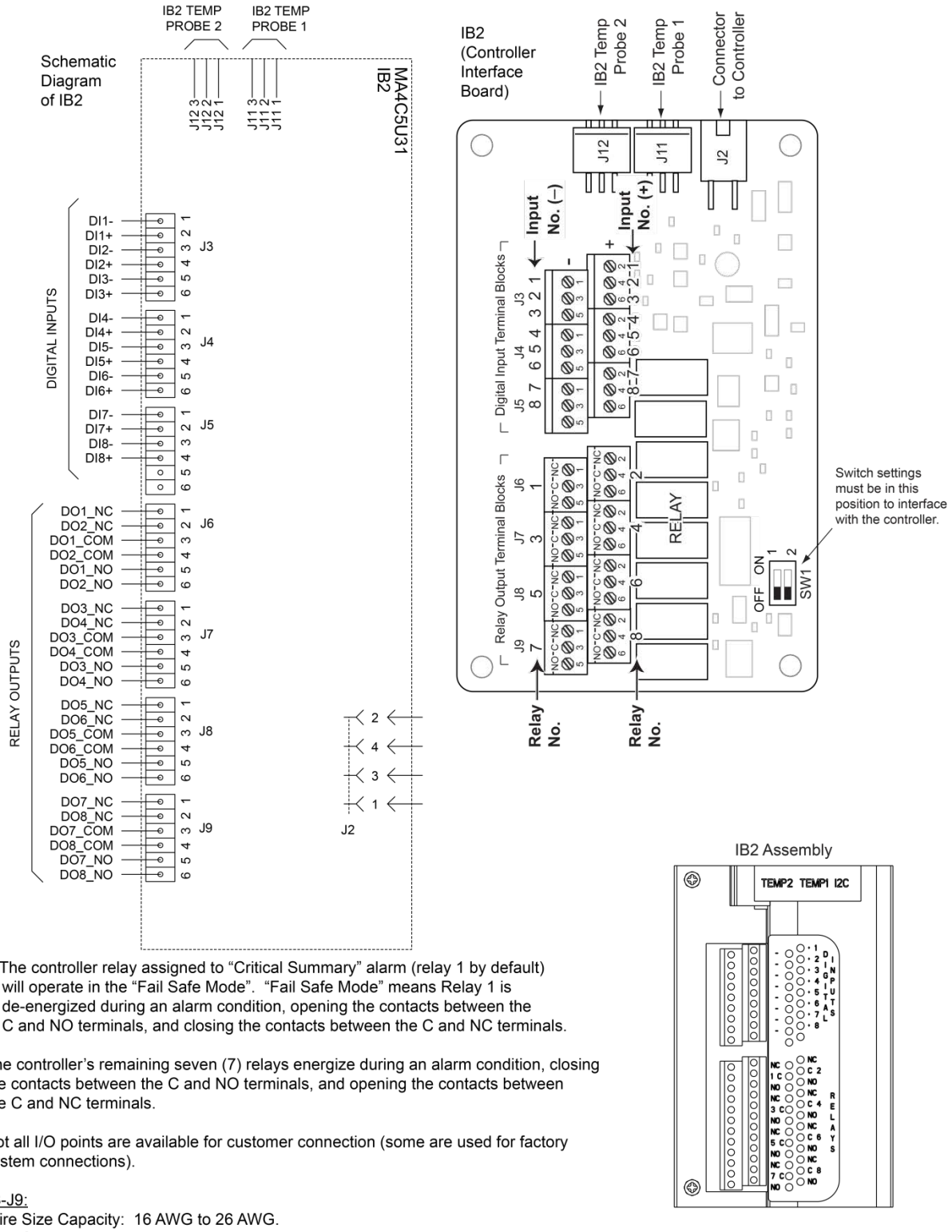

* The controller relay assigned to “Critical Summary” alarm (relay 1 by default) will operate in the “Fail Safe Mode”. “Fail Safe Mode” means Relay 1 is de-energized during an alarm condition, opening the contacts between the C and NO terminals, and closing the contacts between the C and NC terminals.

The controller’s remaining seven (7) relays energize during an alarm condition, closing the contacts between the C and NO terminals, and opening the contacts between the C and NC terminals.

Not all I/O points are available for customer connection (some are used for factory system connections).

J3-J9:
Wire Size Capacity: 16 AWG to 26 AWG.
Wire Strip Length: 0.20 inch.
Recommended Torque: 2.2 in-lbs.

Figure 14
External Alarm, Reference, Monitoring, and Control Connections, IB2 (Controller Interface Board)

© 2026 Vertiv Group Corp. All Rights Reserved.

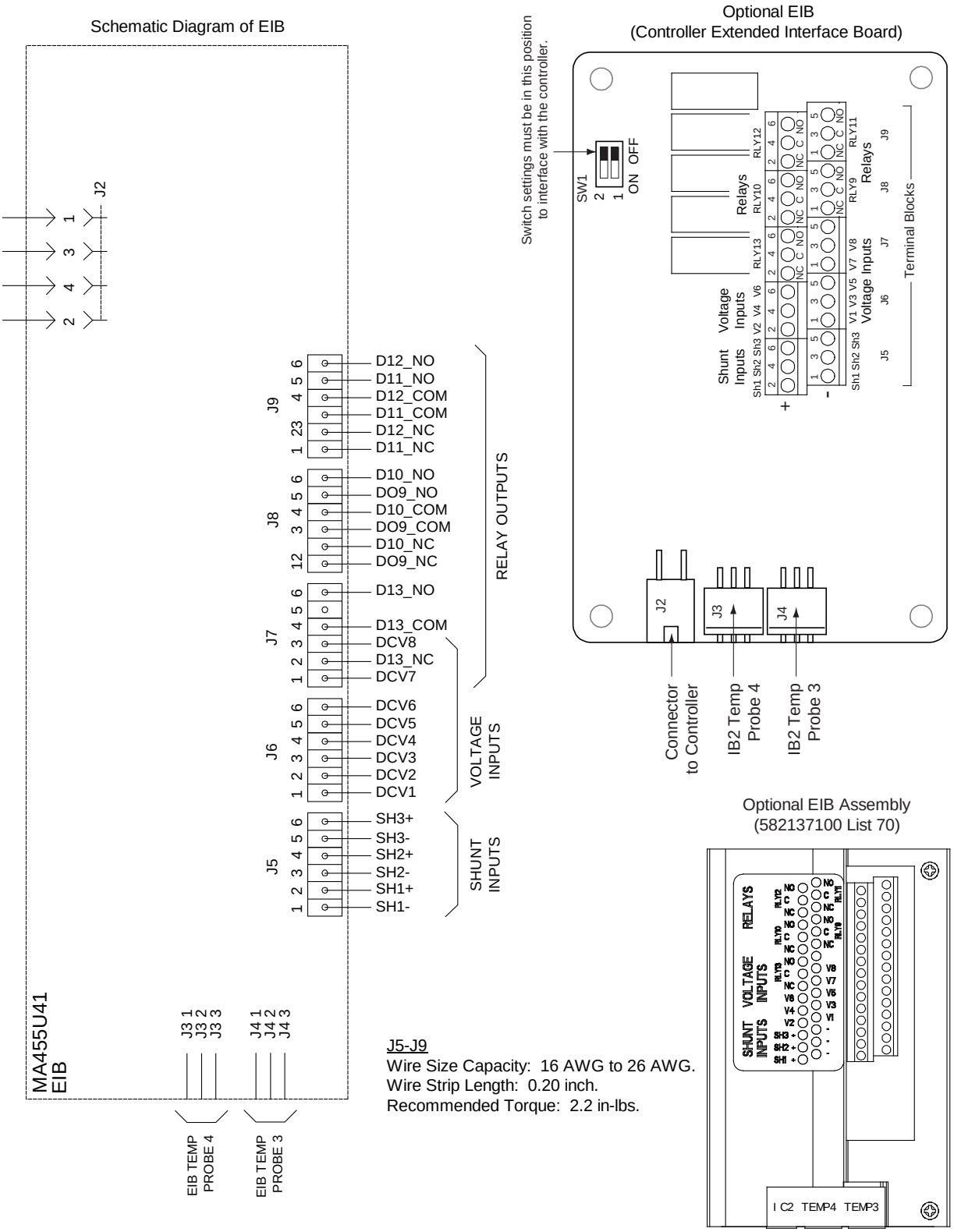

Figure 15
External Alarm, Reference, Monitoring, and Control Connections, EIB (Controller Extended Interface Board)

© 2026 Vertiv Group Corp. All Rights Reserved.

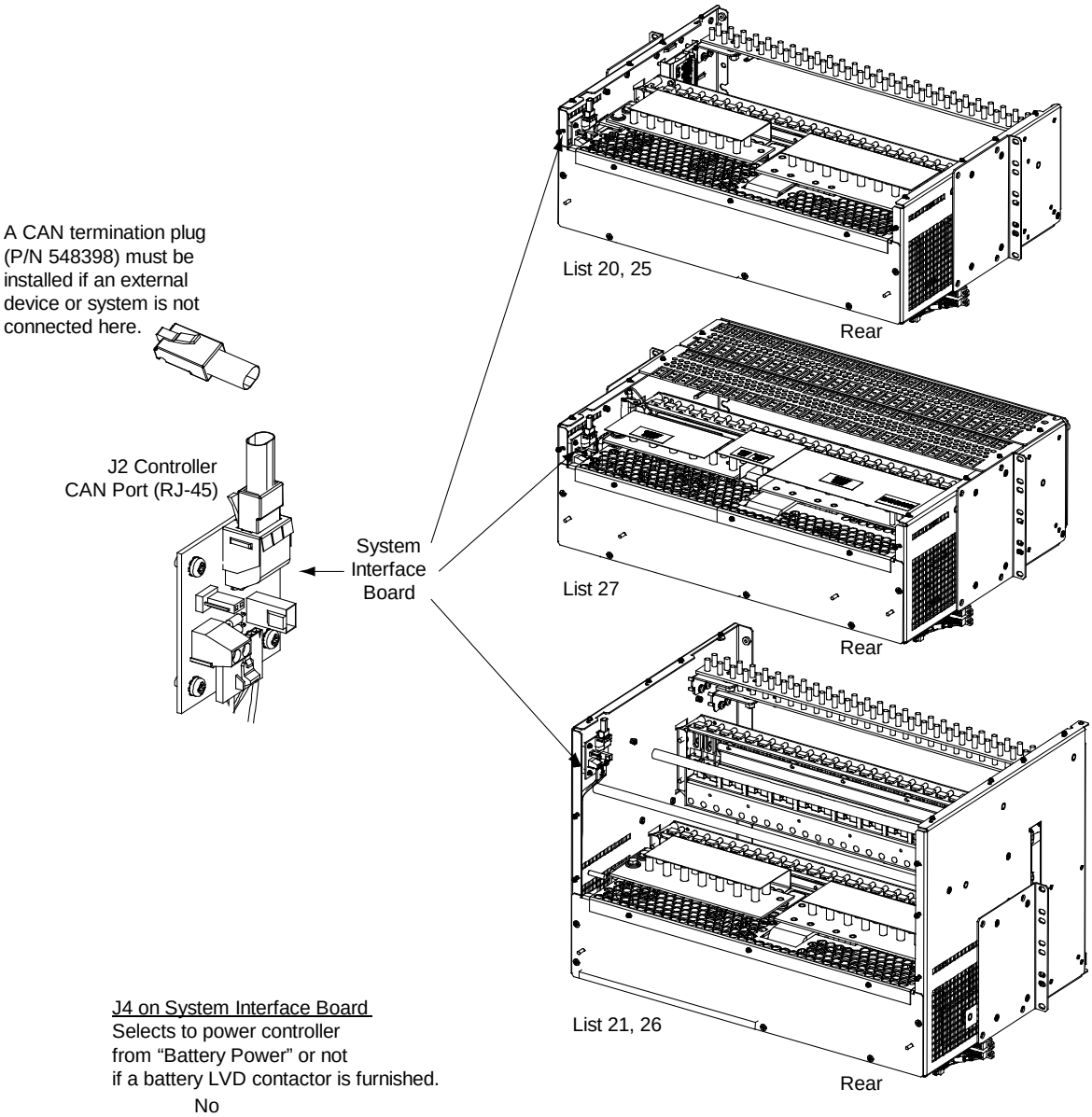

J4 on System Interface Board
Selects to power controller from "Battery Power" or not if a battery LVD contactor is furnished.

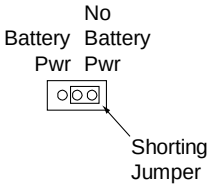

J3 on System Interface Board
Wire Size Capacity: 16 AWG to 30 AWG.
Wire Strip Length: 0.32 inch.
Recommended Torque: 2.3 in-lbs.

RS485 Connection
J3-1: RS485+
J3-2: RS485-

System Interface Board P/N 555484

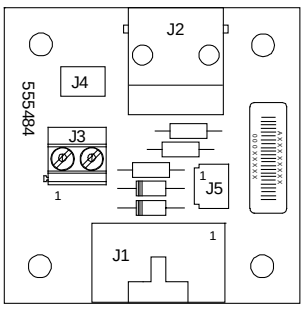

Figure 16
External Alarm, Reference, Monitoring, and Control Connections, System Interface Board P/N 555484

© 2026 Vertiv Group Corp. All Rights Reserved.

NCU Controller Ethernet Connection (if required)

To NCU Front Panel

The NCU Controller provides a Web Interface via an Ethernet connection to a TCP/IP network. This interface can be accessed locally on a computer or remotely through a network. An RJ-45 Ethernet jack is provided on the front of the NCU.

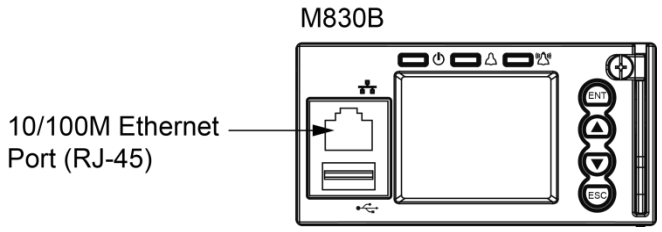

Figure 17
NCU Ethernet Port

Note: *If your system has an IB5 board, DO NOT connect your Local Area Network (LAN) to the NCU front Ethernet port.*

To IB5 Board (if furnished)

Your system may be furnished with an IB5 board. The IB5 board provides a second Ethernet port. The Ethernet port located on the NCU Controller's front panel can ONLY be used to connect a computer directly to the NCU. The Ethernet port located on the IB5 board can be used to connect the NCU to your Local Area Network (LAN).

Note: *If your system has an IB5 board, DO NOT connect your Local Area Network (LAN) to the NCU front Ethernet port.*

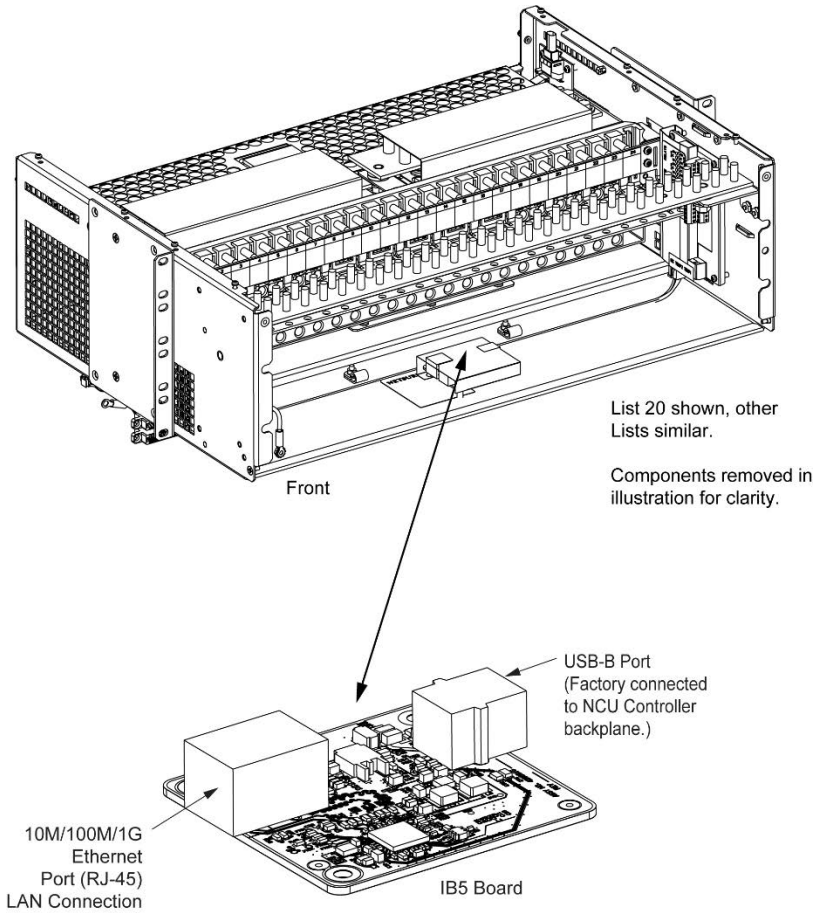

Figure 18
IB5 Board NCU Controller Second Ethernet Port

© 2026 Vertiv Group Corp. All Rights Reserved.

Load Distribution Connections

General

Load leads are connected to the individual load busbars located on the distribution panels. Load return leads are connected to the return busbars located at the top of the distribution cabinet. Note that the return busbars can be rotated 90 degrees if desired. These busbars provide 1/4-20 studs for installation of customer-provided two-hole lugs that have 1/4" bolt clearance holes on 5/8" centers. Customer must provide (or order) lug mounting hardware.

Maximum size of wire to be connected to a single fuseholder/circuit breaker position is 2 AWG. Refer to Table 17 for available lugs. For wiring up to 350 kcmil, see "Special Application Crimp Lug / Strap Combination" in Table 19 (restrictions apply, see note in Table 19). Refer also to "Busbar Lug Adapter and Hardware Kits" in Table 20 for other lug options.

The rating of the distribution device determines the load lead wire size requirement. Table 34 can be used to select recommended load distribution wire sizes and lugs for various loop lengths per fuse/circuit breaker ampere rating.

582137100 List 20, List 25 Distribution Cabinet

Refer to Figure 19 and Figure 20.

582137100 List 21, List 26 Distribution Cabinet

Refer to Figure 21 and Figure 22.

582137100 List 27 Distribution Cabinet

Refer to Figure 23 and Figure 24.

GMT Fuse Block

Refer to Figure 25.

Load Distribution Wiring (List KG)

Refer to Figure 26.

GMT Fuse Blocks

Load and load return leads are connected to screw-type terminal blocks located on the front of the distribution panel. Refer to Figure 26 for terminal block wire size capacity and recommended torque.

The rating of the distribution device determines the wire size requirements. Refer to the American National Standards Institute (ANSI) approved National Fire Protection Association's (NFPA) National Electrical Code (NEC) and applicable local codes.

© 2026 Vertiv Group Corp. All Rights Reserved.

Fuse/ Circuit Breaker Amperage	Recm 90°C Wire Size [1]							
	14 AWG	12 AWG	10 AWG	8 AWG	6 AWG	4 AWG	2 AWG	1/0 AWG
	Loop Length (feet) [2]							
1, 3, 5, 6, 10 A	37 [3, 4, 5]	58 [3, 4, 5]	93 [3, 4, 5]	148 [3, 4, 5]	236 [3, 4, 5]	376 [3, 4, 5]	597 [3, 4, 5]	--
15 A	24 [3, 4]	39 [3, 4, 5]	62 [3, 4, 5]	99 [3, 4, 5]	157 [3, 4, 5]	250 [3, 4, 5]	398 [3, 4, 5]	--
20 A	--	29 [3, 4]	46 [3, 4, 5]	74 [3, 4, 5]	118 [3, 4, 5]	188 [3, 4, 5]	298 [3, 4, 5]	--
25 A	--	--	37 [3, 4,]	59 [3, 4, 5]	94 [3, 4, 5]	150 [3, 4, 5]	239 [3, 4, 5]	--
30 A	--	--	31 [3, 4]	49 [3, 4, 5]	78 [3, 4, 5]	125 [3, 4, 5]	199 [3, 4, 5]	--
35 A	--	--	--	42 [3, 4]	67 [3, 4, 5]	107 [3, 4, 5]	170 [3, 4, 5]	--
40 A	--	--	--	37 [3, 4]	59 [3, 4, 5]	94 [3, 4, 5]	149 [3, 4, 5]	--
45 A	--	--	--	33 [3, 4]	52 [3, 4]	83 [3, 4]	132 [3, 4]	--
50 A	--	--	--	29 [3]	47 [3, 4,]	75 [3, 4]	119 [3, 4]	--
60 A	--	--	--	--	39 [3, 4]	62 [3, 4]	99 [3, 4]	--
70 A	--	--	--	--	--	53 [3, 4]	85 [3, 4]	--
75 A	--	--	--	--	--	50 [3, 4]	79 [3, 4]	--
80 A	--	--	--	--	--	47 [3]	74 [3, 4]	--
Recommended Crimp Lug [6]								
Lug	245342300	245342300	245342300	245390200	245346700	245346800	245346900	--

Table 34 (cont'd on next page)
Recommended Battery and Load Distribution Wire Size and Lug Selection
for TLS/TPS Fuse and Bullet Nose-Type Circuit Breaker

© 2026 Vertiv Group Corp. All Rights Reserved.

Fuse/ Circuit Breaker Amperage	Recm 90°C Wire Size [1]							
	2 AWG	1/0 AWG	2/0 AWG	3/0 AWG	4/0 AWG	250 kcmil	350 kcmil	500 kcmil
	Loop Length (feet) [2]							
90 A	66 [3, 4]	105 [3]	133 [3]	--	--	--	--	--
100 A	59 [3, 4]	95 [3]	119 [3]	--	--	--	--	--
125 A	47 [3]	76 [3]	95 [3]	120 [3]	--	--	--	--
150 A	--	63 [3]	79 [3]	100 [3]	--	--	--	--
200 A	--	--	--	75 [3]	95 [3]	112 [3]	--	--
250 A	--	--	--	--	76 [3]	90 [3]	126 [3]	--
300 A	--	--	--	--	--	--	105 [3]	150 [5]
400 A	--	--	--	94[3]	116[3]	143[3,5]	200[3,5]	--
Recommended Crimp Lug								
Lug	245346900 [6, 8]	245393500 [7, 8]	245393600 [7, 8]	245393700 [7, 8]	245393800 [7, 8]	514872 [7, 8]	514873 [7, 8]	245347900

Notes to Table 34:

1. Wire sizes based on recommendations of the American National Standards Institute (ANSI) approved National Fire Protection Association's (NFPA) National Electrical Code (NEC). Table 310.15 (B) (16) for copper wire at 90 °C conductor temperature. For operation in countries where the NEC is not recognized, follow applicable codes.
2. Recommended wire sizes are sufficient to restrict voltage drop to 1.0 volt or less at listed branch current for the loop lengths shown. Loop length is the sum of the lengths of the positive and negative leads.
3. Wire Size / Loop Length Combination Calculated using 40 °C Ambient Operating Temperature.
4. Wire Size / Loop Length Combination Calculated using 50 °C Ambient Operating Temperature.
5. Wire Size / Loop Length Combination Calculated using 65 °C Ambient Operating Temperature.
6. These lugs are two-hole for 1/4" bolt clearance on 5/8" centers. Lugs should be crimped per lug manufacturer's specifications.
7. Special application crimp lug / strap combination (restrictions apply, see note in Table 19).
8. The 400A breaker requires (2) cables in parallel and a four-pole adapter plate 10078650. Can also use 60159564 four-pole adapter and (2) two-hole lugs of the appropriate size from Table 18.

Table 34 (cont'd from previous page)
Recommended Battery and Load Distribution Wire Size and Lug Selection
for TLS/TPS Fuse and Bullet Nose-Type Circuit Breaker

© 2026 Vertiv Group Corp. All Rights Reserved.

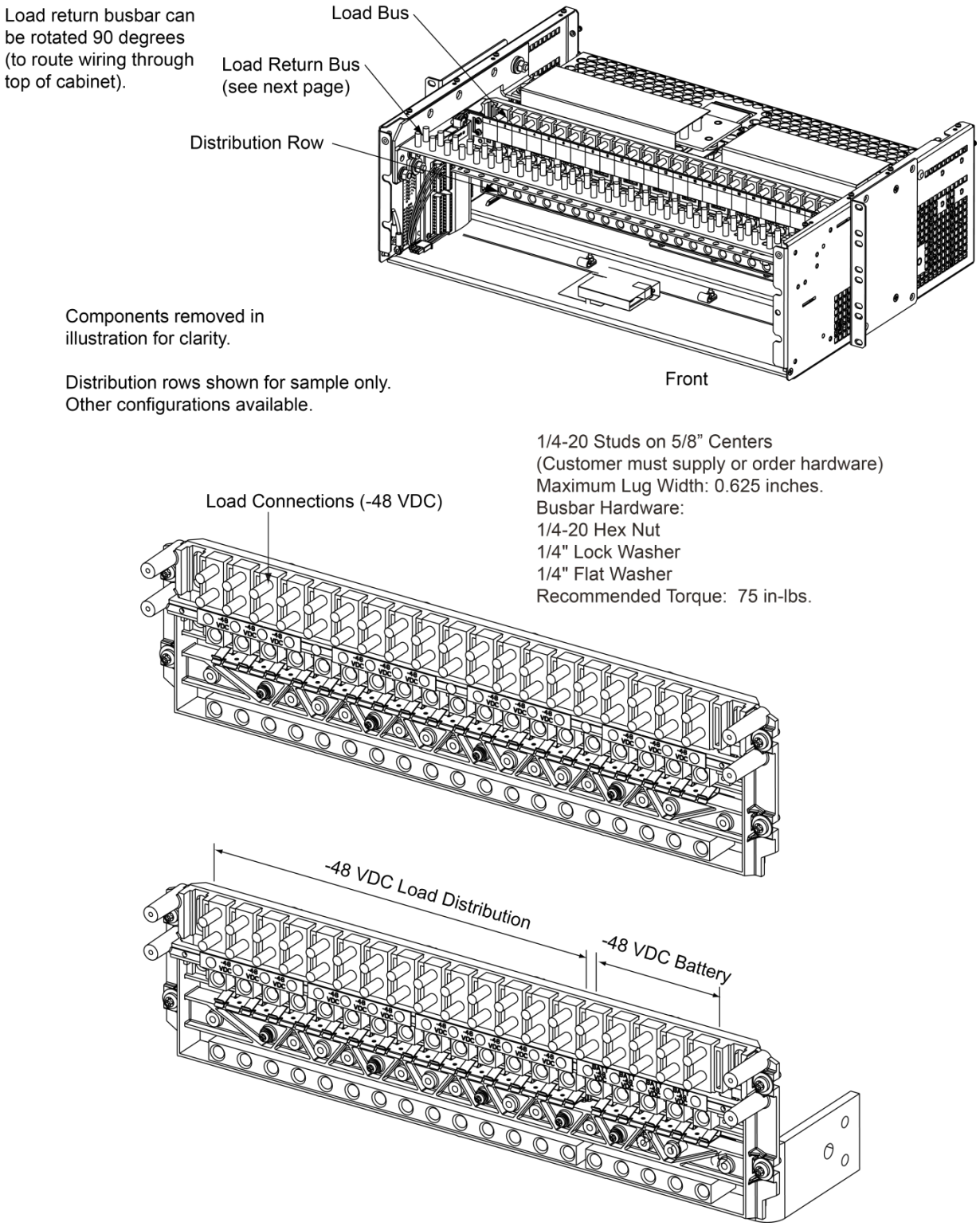

Figure 19
582137100 List 20, List 25 Distribution Cabinet Load Side Connections

© 2026 Vertiv Group Corp. All Rights Reserved.

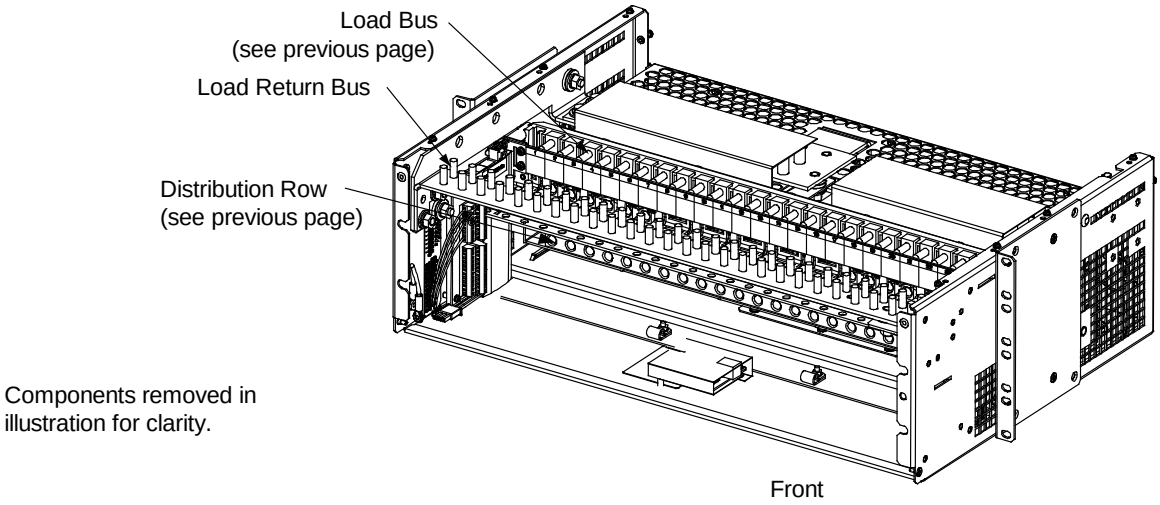

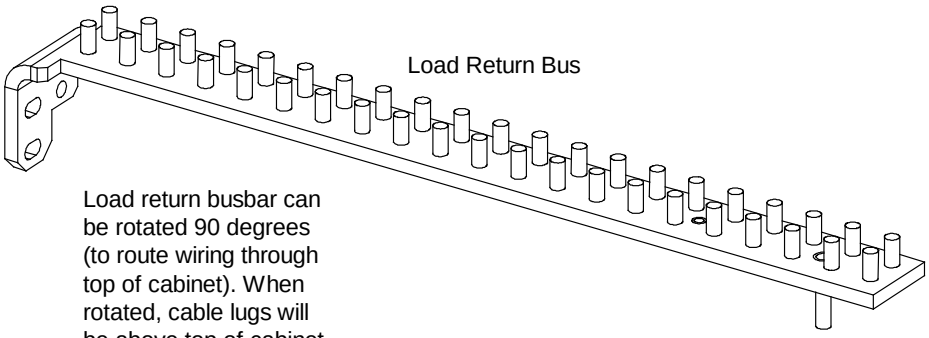

Figure 20
582137100 List 20, List 25 Distribution Cabinet Load Return Side Connections

© 2026 Vertiv Group Corp. All Rights Reserved.

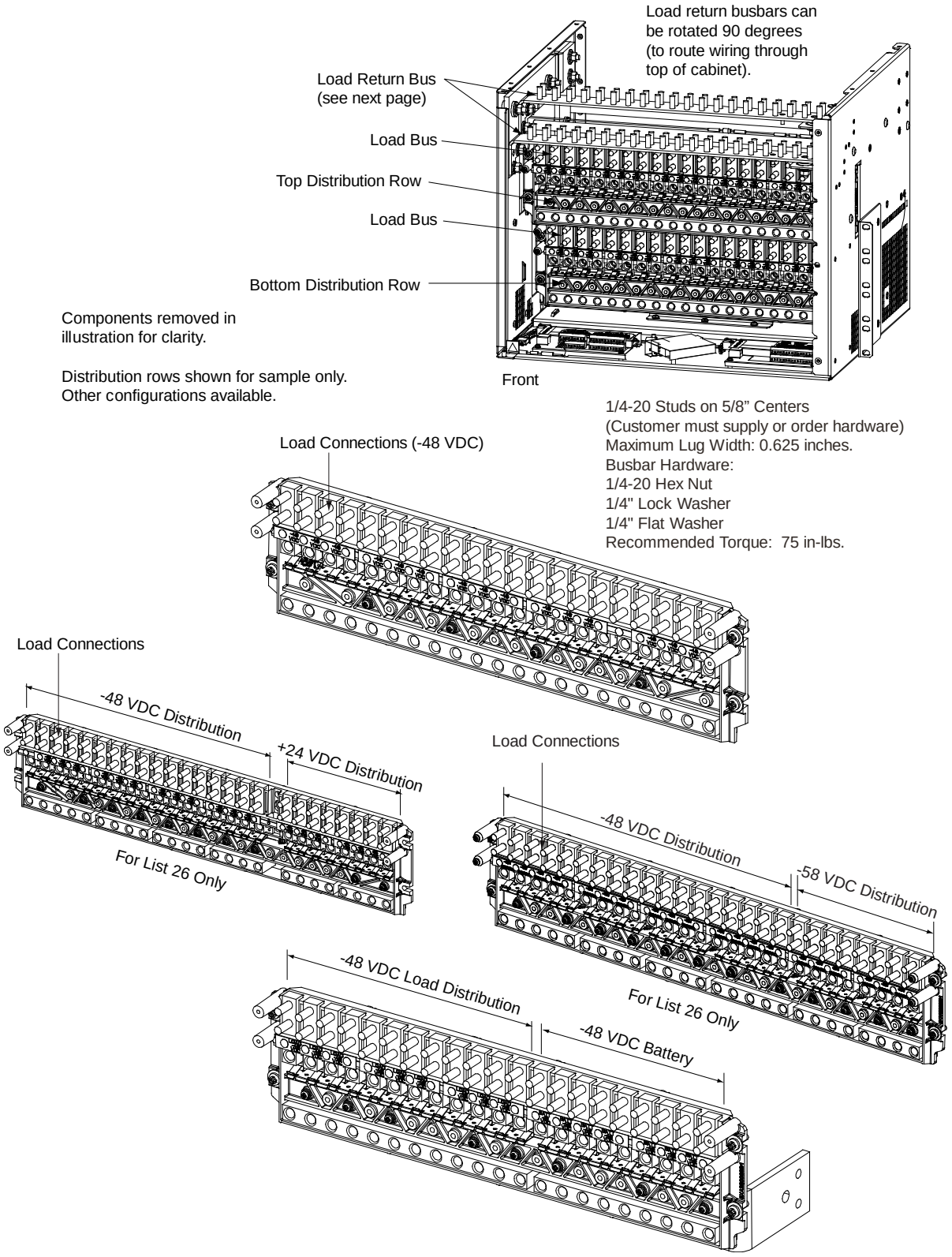

Figure 21
582137100 List 21, List 26 Distribution Cabinet Load Side Connections

© 2026 Vertiv Group Corp. All Rights Reserved.

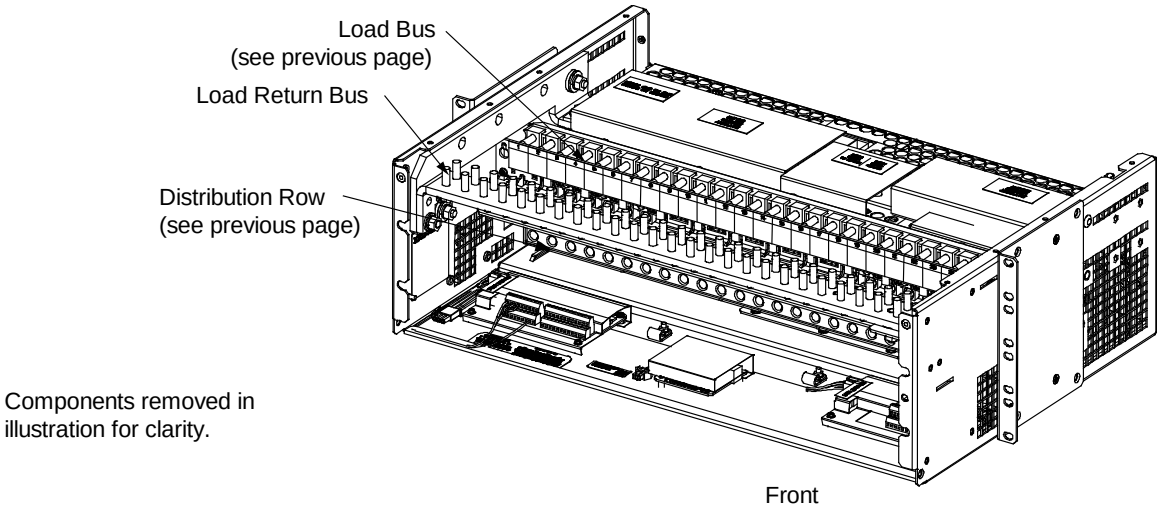

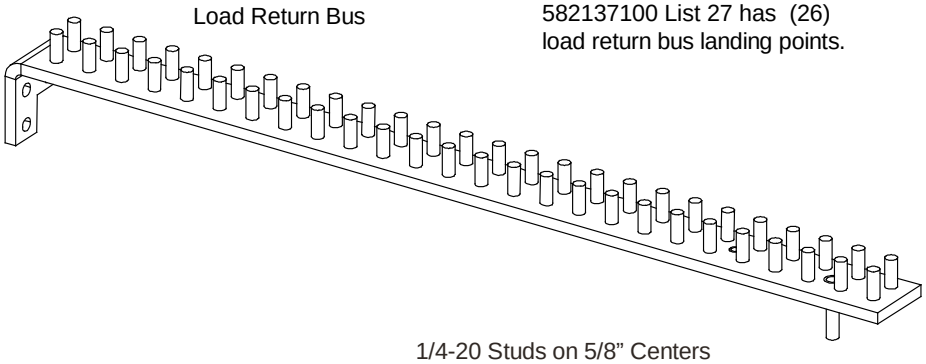

Figure 22
582137100 List 21, List 26 Distribution Cabinet Load Return Side Connections

© 2026 Vertiv Group Corp. All Rights Reserved.

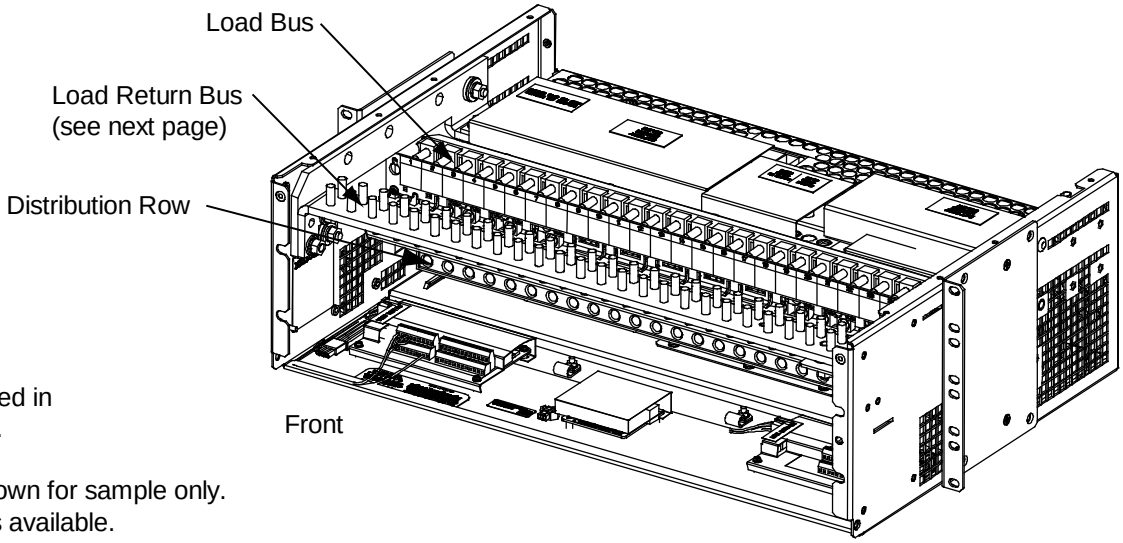

Components removed in illustration for clarity.

Distribution rows shown for sample only. Other configurations available.

1/4-20 Studs on 5/8” Centers
(Customer must supply or order hardware)
Maximum Lug Width: 0.625 inches.
Busbar Hardware:
1/4-20 Hex Nut
1/4" Lock Washer
1/4" Flat Washer
Recommended Torque: 75 in-lbs.

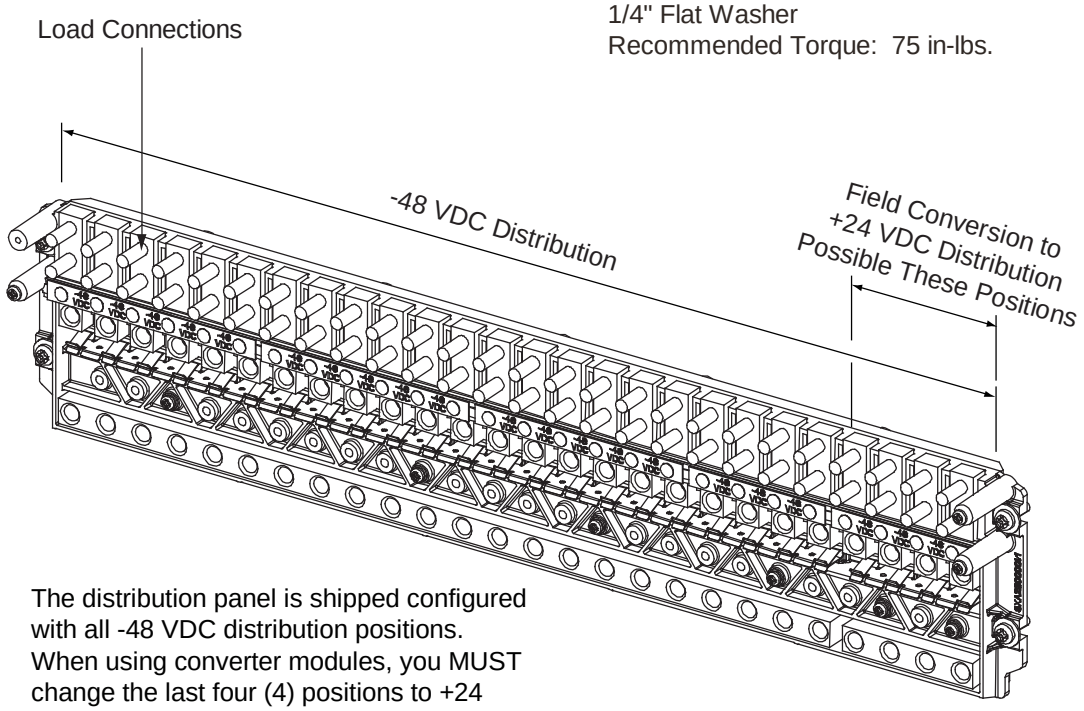

The distribution panel is shipped configured with all -48 VDC distribution positions. When using converter modules, you MUST change the last four (4) positions to +24 VDC distribution positions in the field. Refer to UM582137100 for a procedure.

Figure 23
582137100 List 27 Distribution Cabinet Load Side Connections

© 2026 Vertiv Group Corp. All Rights Reserved.

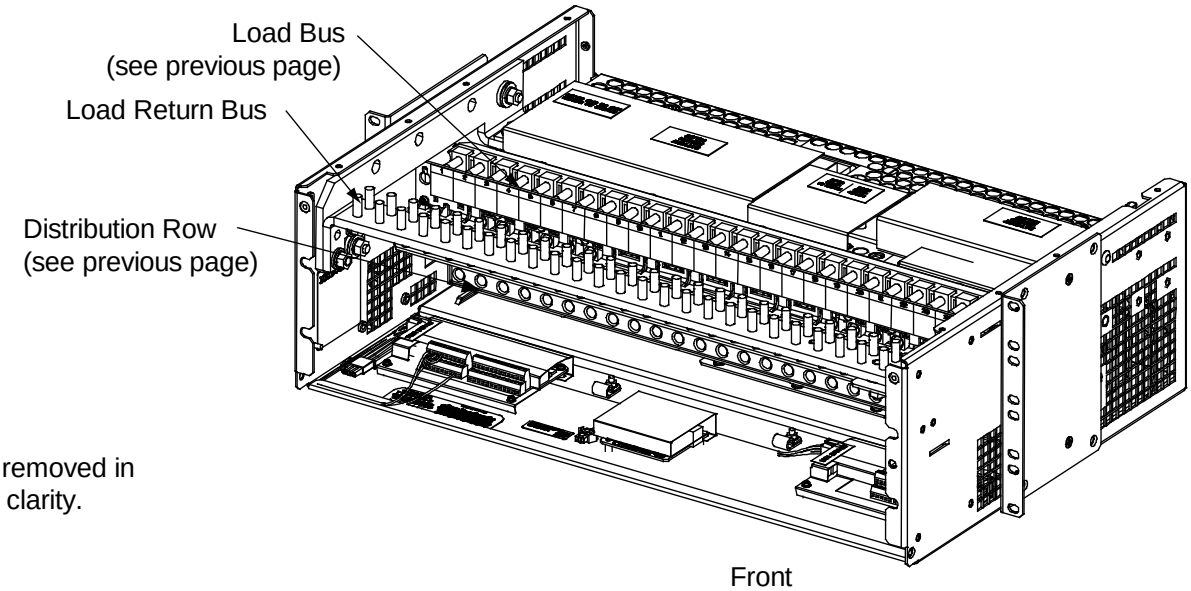

Components removed in illustration for clarity.

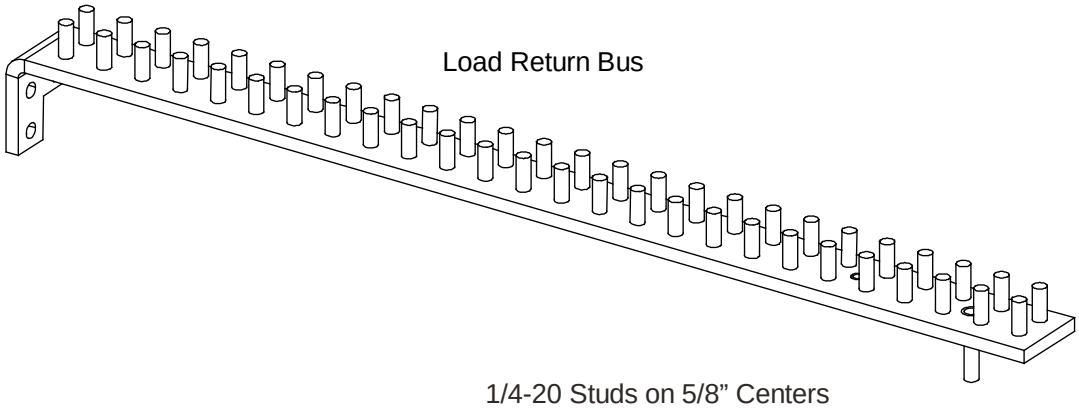

1/4-20 Studs on 5/8” Centers
(Customer must supply or order hardware)
Maximum Lug Width: 0.625 inches.
Busbar Hardware:
1/4-20 Hex Nut
1/4" Lock Washer
1/4" Flat Washer
Recommended Torque: 75 in-lbs.

Figure 24
582137100 List 27 Distribution Cabinet Load Return Side Connections

© 2026 Vertiv Group Corp. All Rights Reserved.

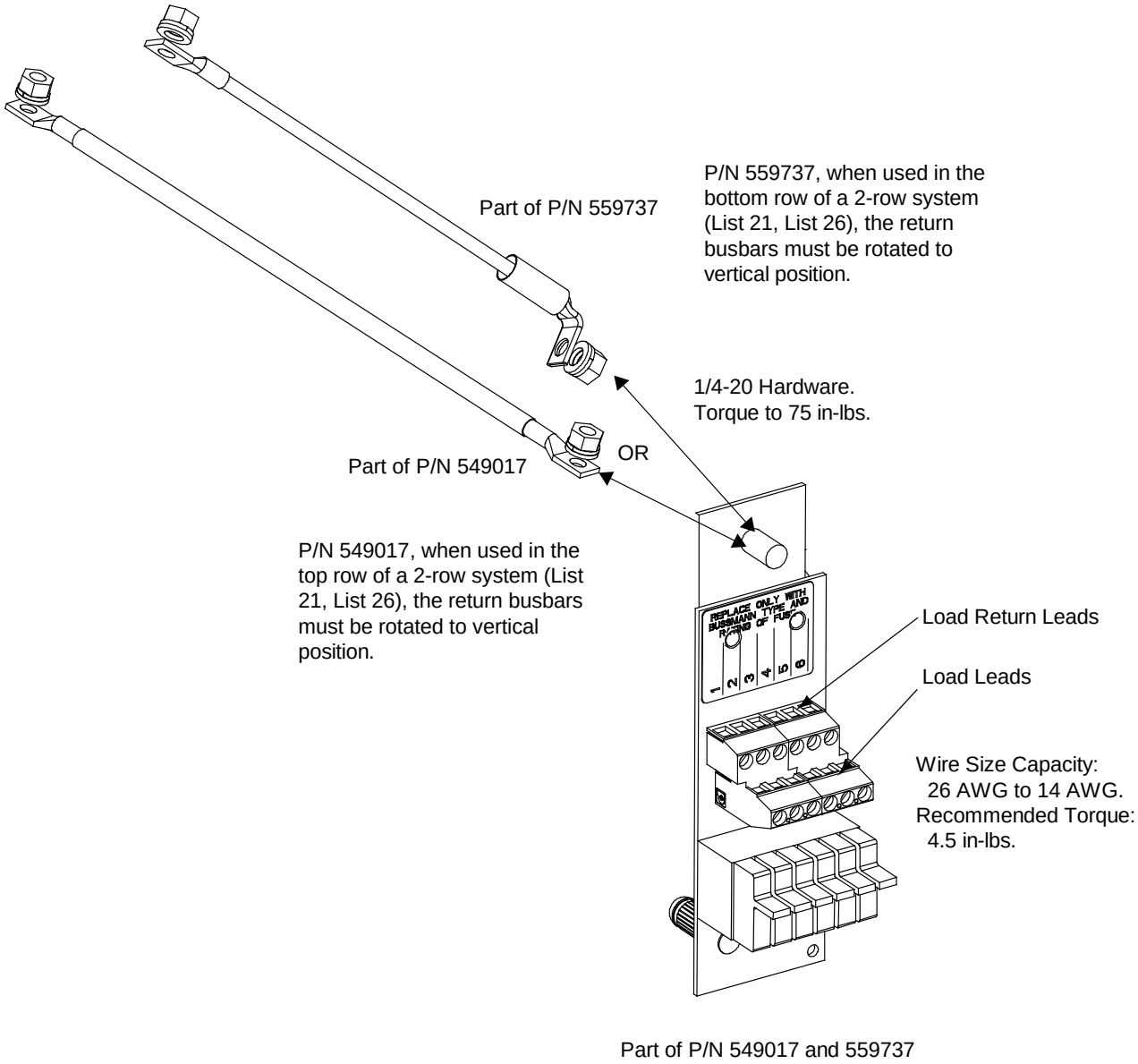

Figure 25
Load Connections to GMT Fuse Block

© 2026 Vertiv Group Corp. All Rights Reserved.

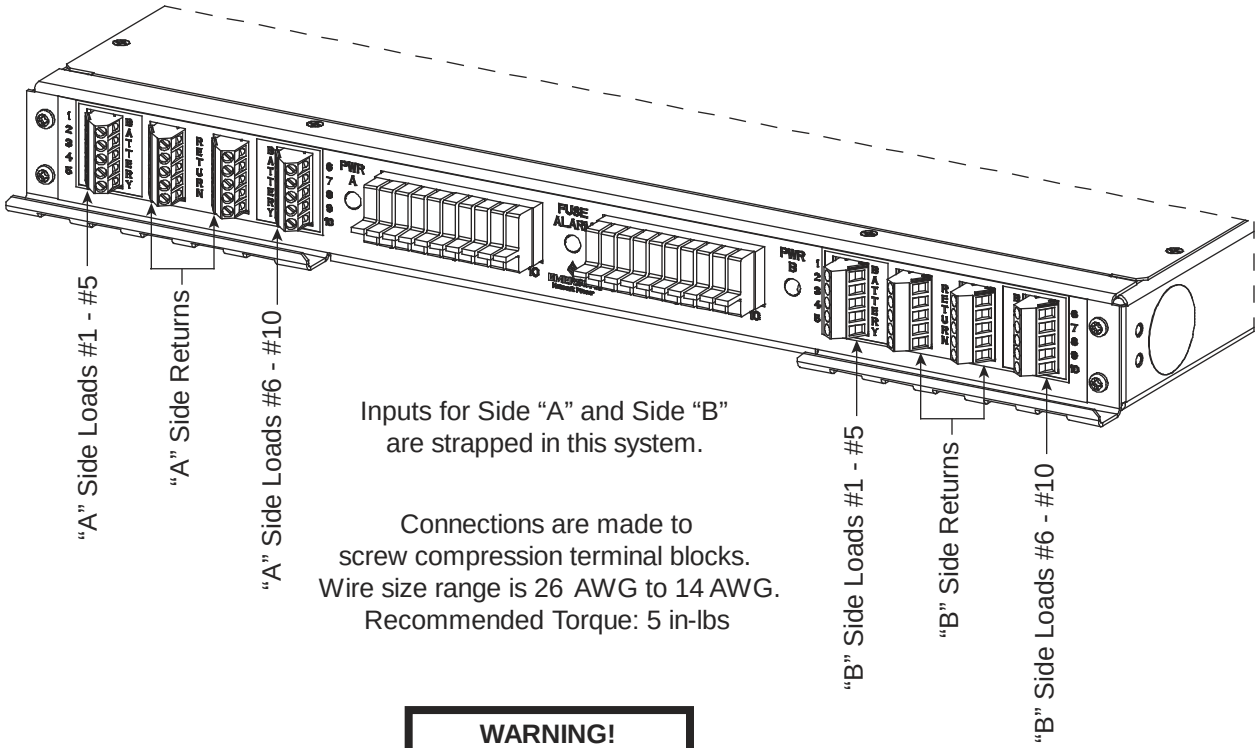

Figure 26
Load Distribution Wiring (GMT Fuses) (List KG)

Optional Transient Voltage Surge Suppressor (TVSS) Device Ground Connection

Connect cable P/N 565296 (provided with P/N 565281 TVSS device) from the TVSS position on the distribution panel to the return bar. Refer to Figure 27, Figure 28, and Figure 29.

© 2026 Vertiv Group Corp. All Rights Reserved.

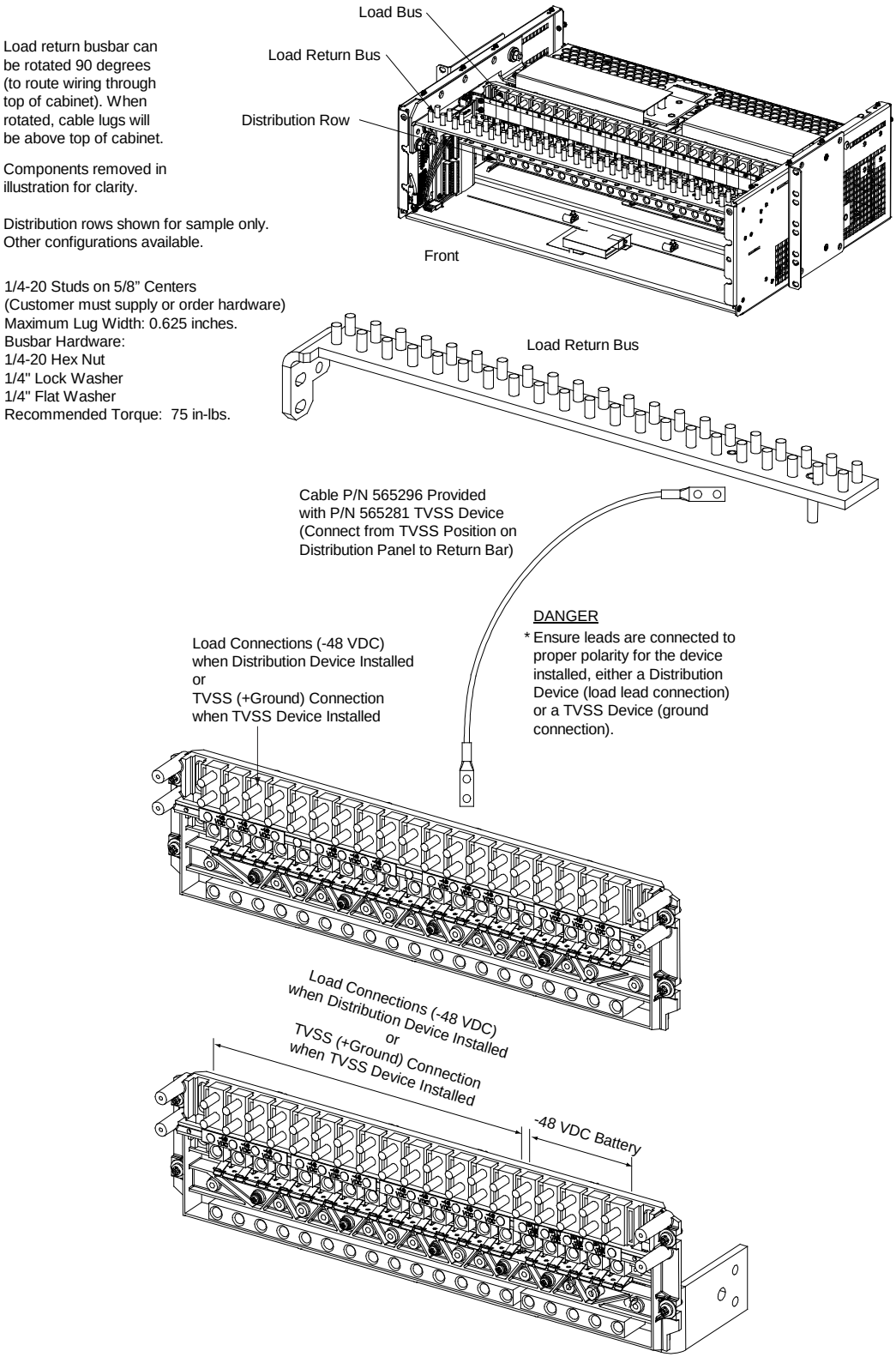

Figure 27
582137100 List 20, List 25 Distribution Cabinet Optional Transient Voltage Surge Suppressor (TVSS) Device Ground Connection

© 2026 Vertiv Group Corp. All Rights Reserved.

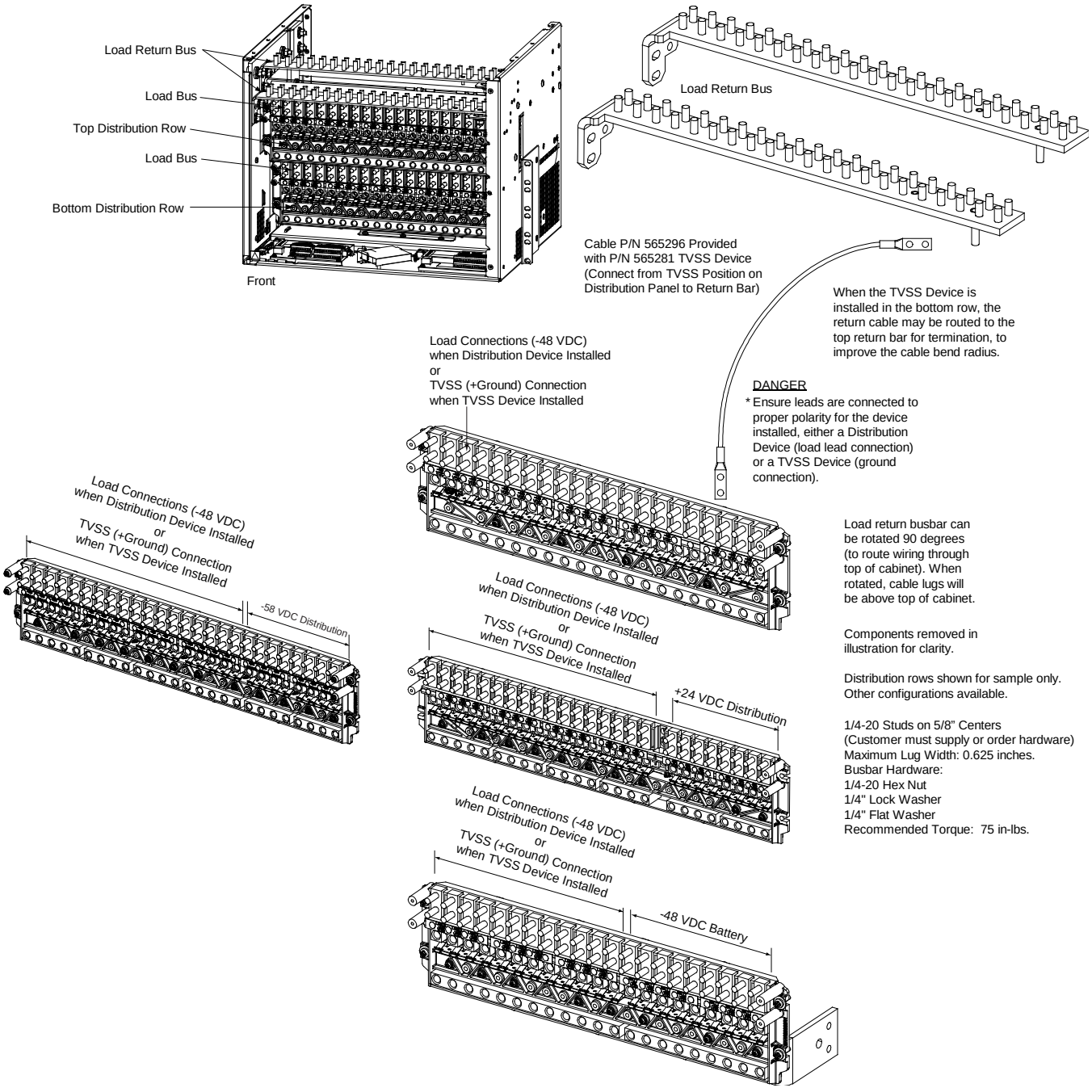

Figure 28
582137100 List 21, List 26 Distribution Cabinet Optional Transient Voltage Surge Suppressor (TVSS) Device Ground Connection

© 2026 Vertiv Group Corp. All Rights Reserved.

Components removed in illustration for clarity.

Distribution rows shown for sample only. Other configurations available.

1/4-20 Studs on 5/8” Centers
(Customer must supply or order hardware)
Maximum Lug Width: 0.625 inches.
Busbar Hardware:
1/4-20 Hex Nut
1/4" Lock Washer
1/4" Flat Washer
Recommended Torque: 75 in-lbs.

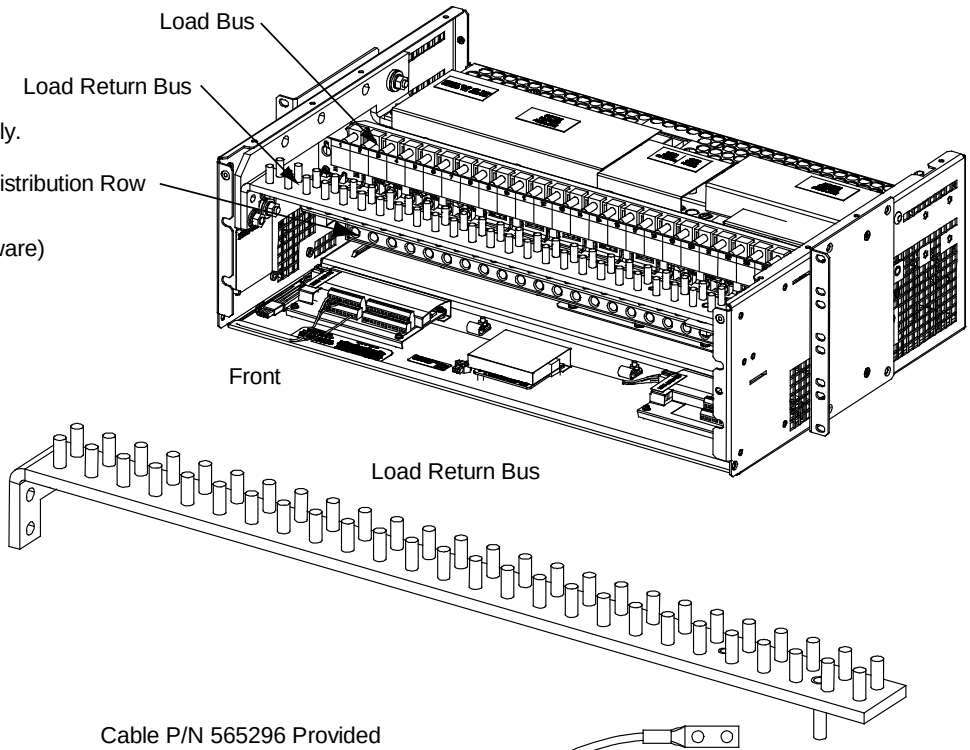

Cable P/N 565296 Provided with P/N 565281 TVSS Device (Connect from TVSS Position on Distribution Panel to Return Bar)

DANGER

* Ensure leads are connected to proper polarity for the device installed, either a Distribution Device (load lead connection) or a TVSS Device (ground connection).

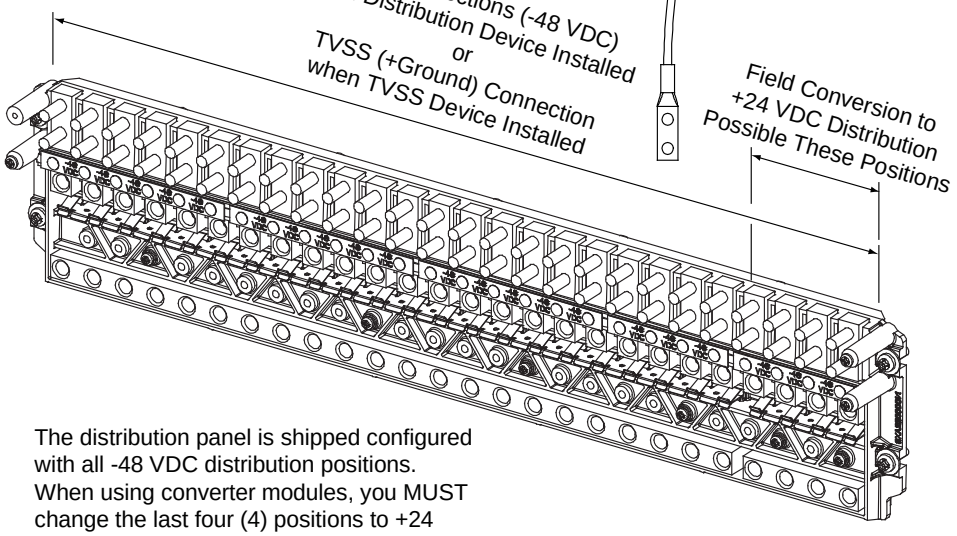

The distribution panel is shipped configured with all -48 VDC distribution positions. When using converter modules, you MUST change the last four (4) positions to +24 VDC distribution positions in the field. Refer to UM582137100 for a procedure.

Figure 29
582137100 List 27 Distribution Cabinet Optional Transient Voltage Surge Suppressor (TVSS) Device Ground Connection

© 2026 Vertiv Group Corp. All Rights Reserved.

DC Breaker Wiring to Hybrid Connection Cabinet (List 60)

Refer to Table 35 for recommended wire sizes and branch circuit protection.

Refer to Figure 30 for an illustration.

DC Breaker Wiring to Hybrid Connection Cabinet (List 60)		
GJ Breaker Value	**Temperature**	
	40 °C Ambient Temperature [1]	**65 °C Ambient Temperature [2]**
100 A	2 AWG	1/0 AWG
125 A	2 AWG	1/0 AWG
150 A	1/0 AWG	2/0 AWG
175 A	2/0 AWG	4/0 AWG
200 A	3/0 AWG	250 kcmil
225 A	3/0 AWG	300 kcmil
250 A	4/0 AWG	350 kcmil
300 A	300 kcmil	500 kcmil
350 A	350 kcmil	600 kcmil
400 A	500 kcmil	800 kcmil
600 A	1000 kcmil	na

1 At 40 °C all breaker wiring is calculated at 80% load of device rating.

2 400 A is maximum breaker value at 65 °C. Wiring is calculated for circuit breakers 250 A and below at 80% of rated value. Wiring is calculated for the 300 A circuit breaker at 68% of rated value and the 400 A breaker at 70% of rated value. 600 A circuit breakers cannot be used in a 65 °C application.

Table 35
Recommended DC Breaker Wiring to Hybrid Connection Cabinet (List 60)

© 2026 Vertiv Group Corp. All Rights Reserved.

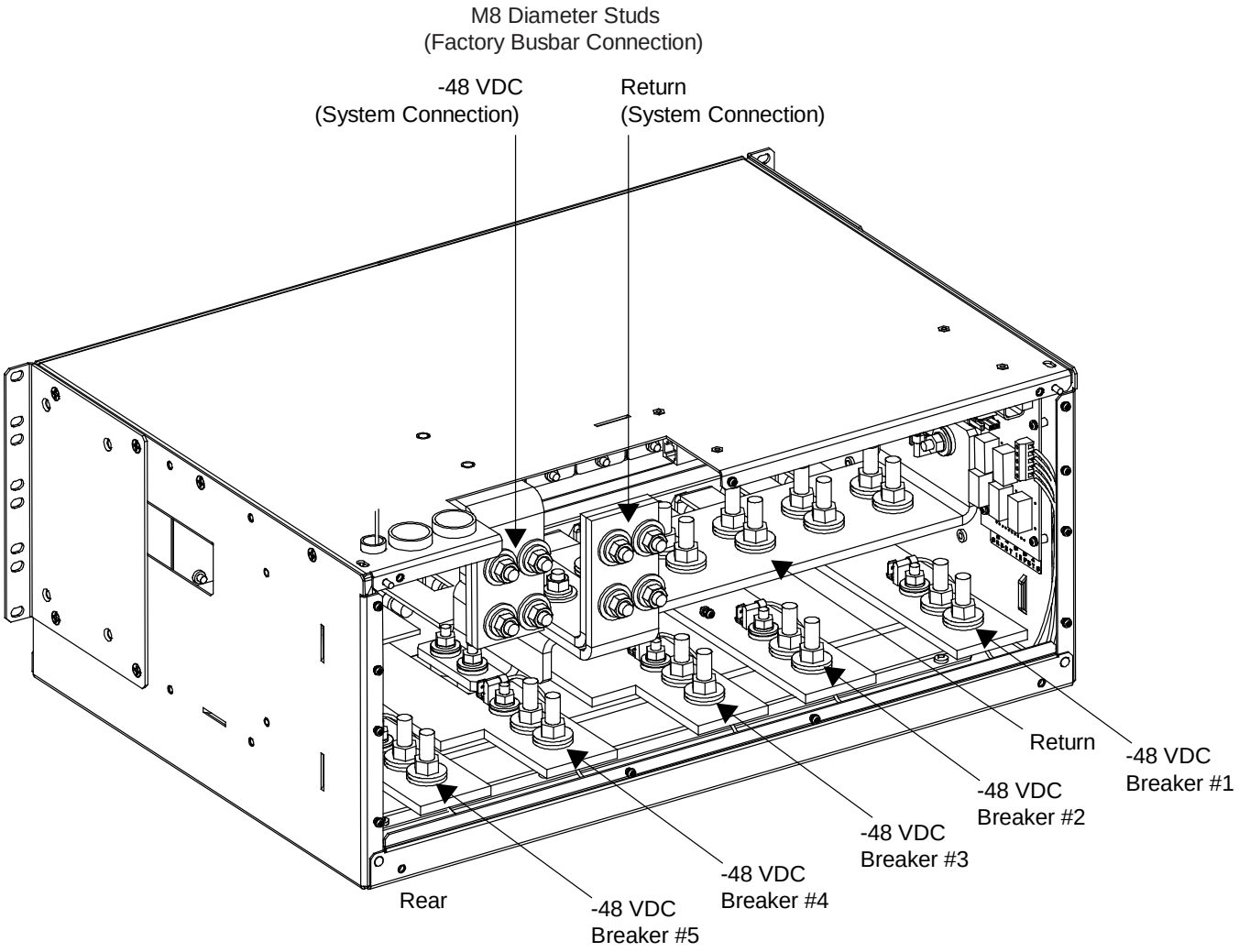

3/8” Studs on 1” Centers
Maximum Lug Width: 2 inches.
Hardware:
3/8" Hex Nut
3/8" Lock Washer
3/8" Flat Washer
Torque to 300 in-lbs.

Figure 30
Load Connections to Hybrid Connection Cabinet (List 60)

© 2026 Vertiv Group Corp. All Rights Reserved.

Input Battery Connections

582137100 List 20, List 25 Distribution Cabinet

To Battery Busbars

Input battery leads are connected to the battery (load side) busbar and battery return busbar. These busbars provide 3/8-16 studs for installation of customer provided two hole lugs that have 3/8 inch bolt clearance holes on 1 inch centers. Customer must provide or order lug mounting hardware.

Battery wire size and lug requirements are determined by site requirements. See Table 18 for available lugs.

Refer to Figure 31.

To Battery Disconnect Distribution Panels (if furnished)

Input battery leads are connected to the battery disconnect device battery busbars located on the distribution panel. Battery return leads are connected to the battery return busbar located at the top of the distribution cabinet. The battery disconnect device battery busbars provide 1/4-20 studs for installation of customer provided two hole lugs that have 1/4" bolt clearance holes on 5/8" centers. Customer must provide or order lug mounting hardware.

Maximum size of wire to be connected to a single fuseholder/circuit breaker position is 2 AWG. Refer to Table 17 for available lugs. For wiring up to 350 kcmil, see "Special Application Crimp Lug / Strap Combination" in Table 19 (restrictions apply, see note in Table 19). Refer also to "Busbar Adapter and Hardware Kits" in Table 20 for other lug options.

The rating of the distribution device determines the battery lead wire size requirement. Table 34 can be used to select recommended battery wire sizes and lugs for various loop lengths per fuse/circuit breaker ampere rating. See Table 18 for battery return busbar lugs.

Refer to Figure 32.

© 2026 Vertiv Group Corp. All Rights Reserved.

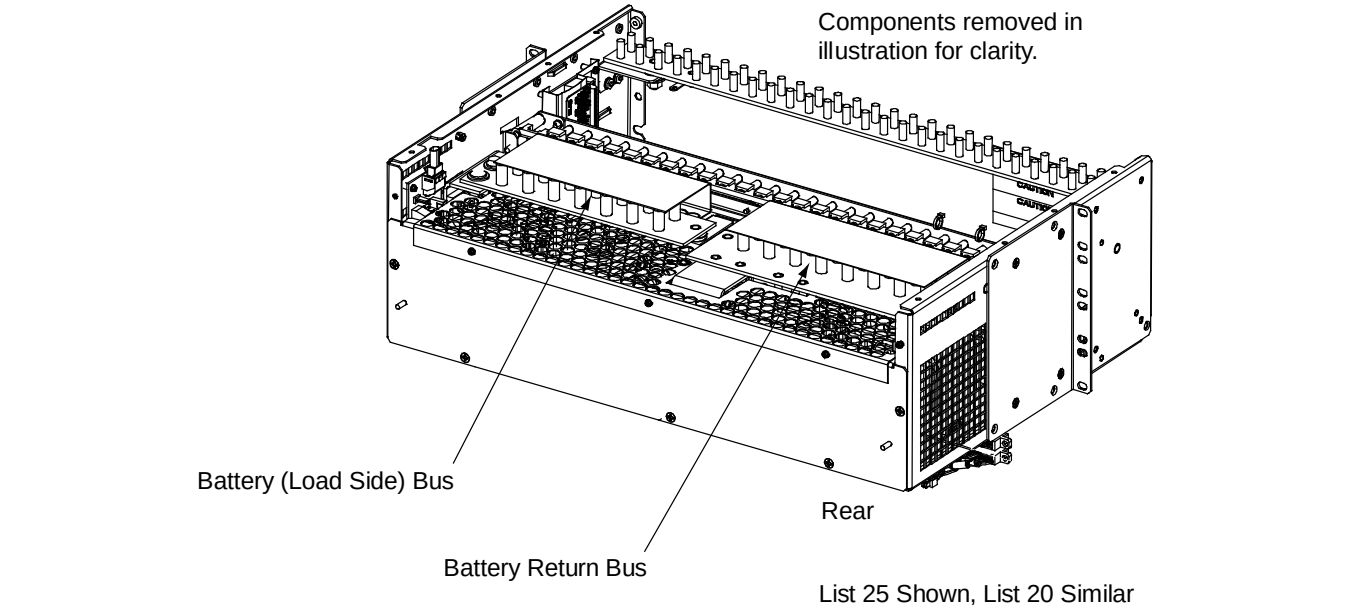

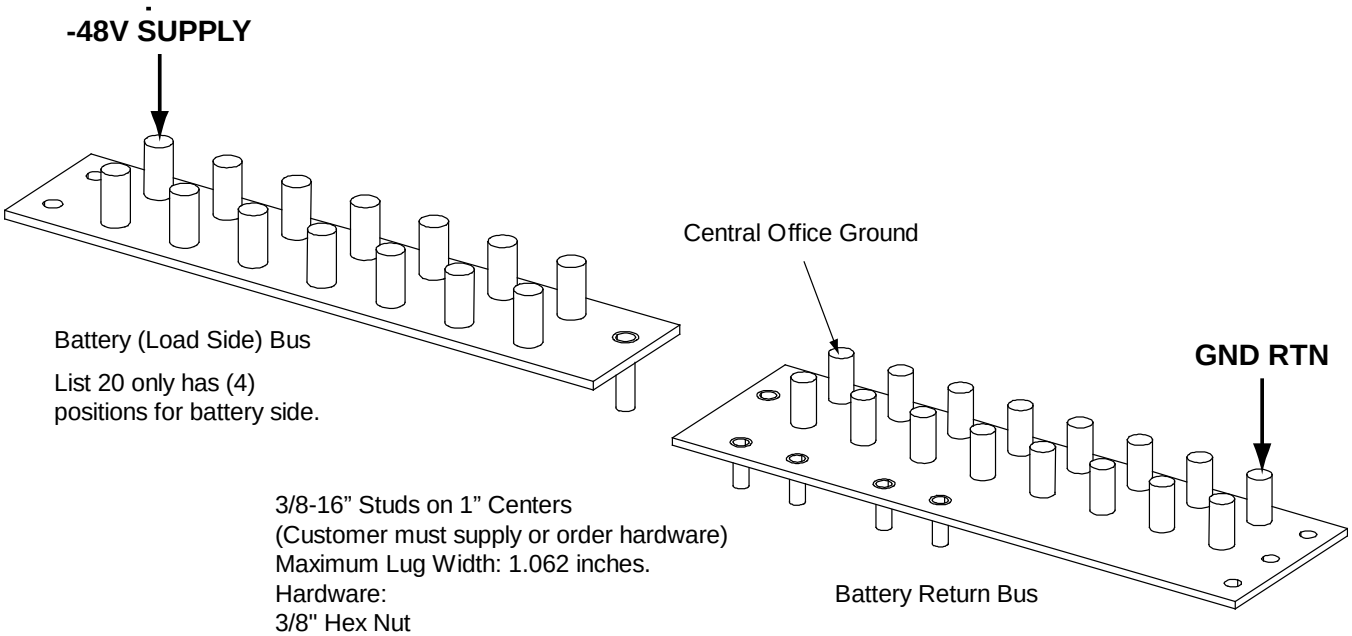

Figure 31
Battery and Central Office Ground Connections
582137100 List 20, List 25 Distribution Cabinet Battery Busbars

© 2026 Vertiv Group Corp. All Rights Reserved.

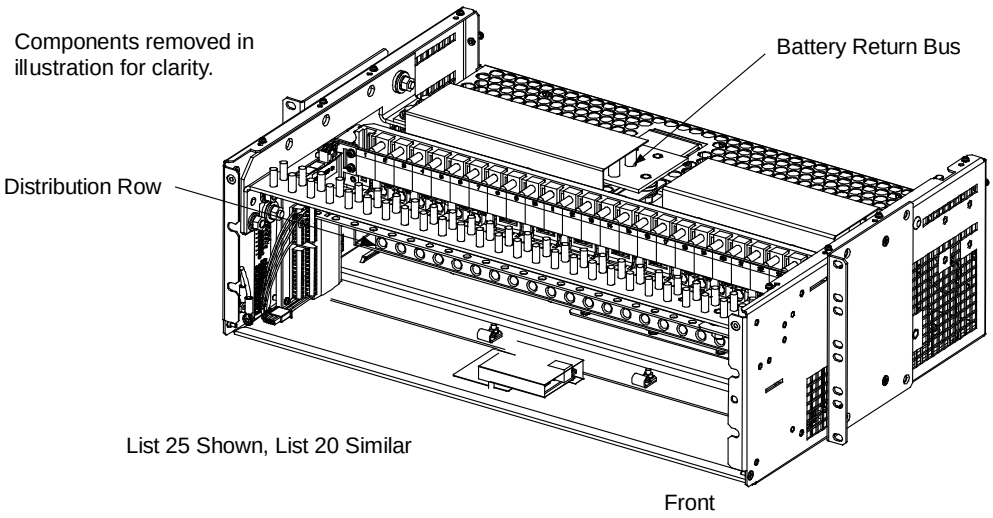

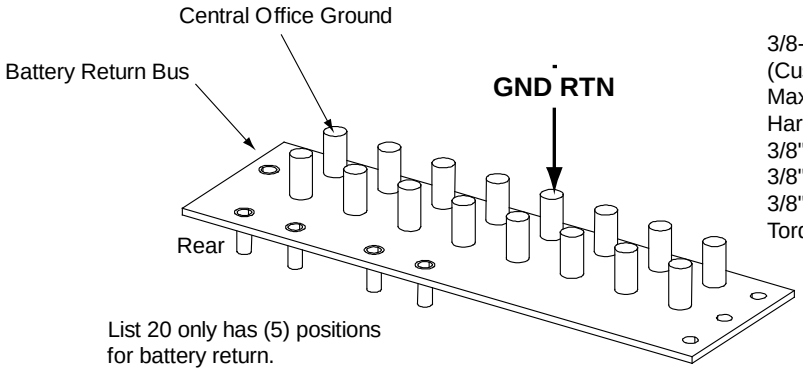

3/8-16” Studs on 1” Centers
(Customer must supply or order hardware)
Maximum Lug Width: 1.062 inches.
Hardware:
3/8" Hex Nut
3/8" Lock Washer
3/8" Flat Washer
Torque to 300 in-lbs.

Distribution row shown for sample only.
Other configurations available.

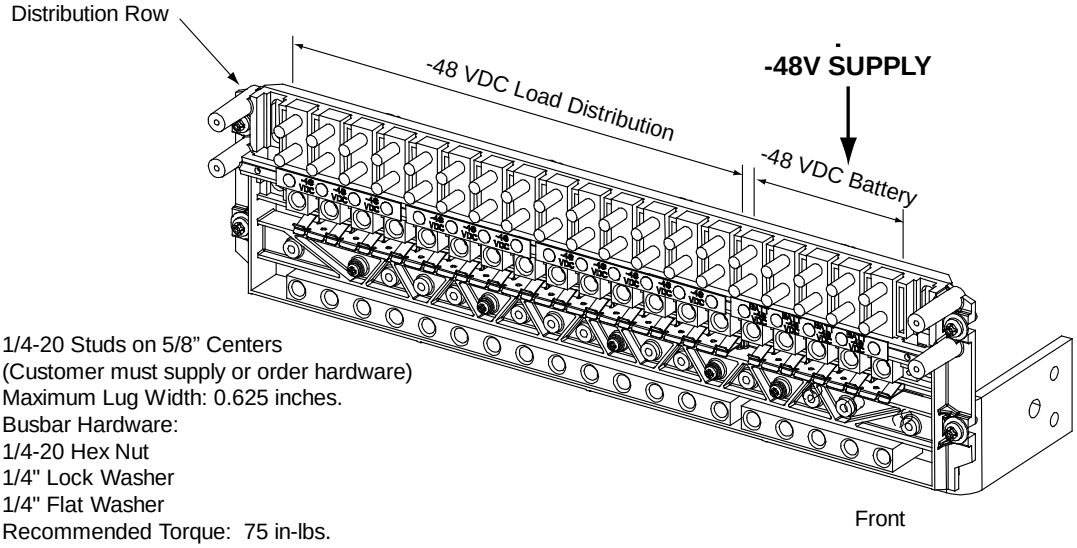

1/4-20 Studs on 5/8” Centers
(Customer must supply or order hardware)
Maximum Lug Width: 0.625 inches.
Busbar Hardware:
1/4-20 Hex Nut
1/4" Lock Washer
1/4" Flat Washer
Recommended Torque: 75 in-lbs.

Figure 32
Battery and Central Office Ground Connections
582137100 List 20, List 25 Battery Disconnect Distribution Panels

© 2026 Vertiv Group Corp. All Rights Reserved.

582137100 List 21, List 26 Distribution Cabinet

To Battery Busbars

Input battery leads are connected to the battery busbar and battery return busbar. These busbars provide 3/8-16 studs for installation of customer provided two hole lugs that have 3/8 inch bolt clearance holes on 1 inch centers. Customer must provide or order lug mounting hardware.

Battery wire size and lug requirements are determined by site requirements. See Table 18 for available lugs.

Refer to Figure 33.

To Battery Disconnect Distribution Panels (if furnished)

Input battery leads are connected to the battery disconnect device battery busbars located on the distribution panel. Battery return leads are connected to the battery return busbar located at the top of the distribution cabinet. The battery disconnect device battery busbars provide 1/4-20 studs for installation of customer provided two hole lugs that have 1/4" bolt clearance holes on 5/8" centers. Customer must provide or order lug mounting hardware.

Maximum size of wire to be connected to a single fuseholder/circuit breaker position is 2 AWG. Refer to Table 17 for available lugs. For wiring up to 350 kcmil, see "Special Application Crimp Lug / Strap Combination" in Table 19 (restrictions apply, see note in Table 19). Refer also to "Busbar Adapter and Hardware Kits" in Table 20 for other lug options.

The rating of the distribution device determines the battery lead wire size requirement. Table 34 can be used to select recommended battery wire sizes and lugs for various loop lengths per fuse/circuit breaker ampere rating. See Table 18 for battery return busbar lugs.

Refer to Figure 34.

© 2026 Vertiv Group Corp. All Rights Reserved.

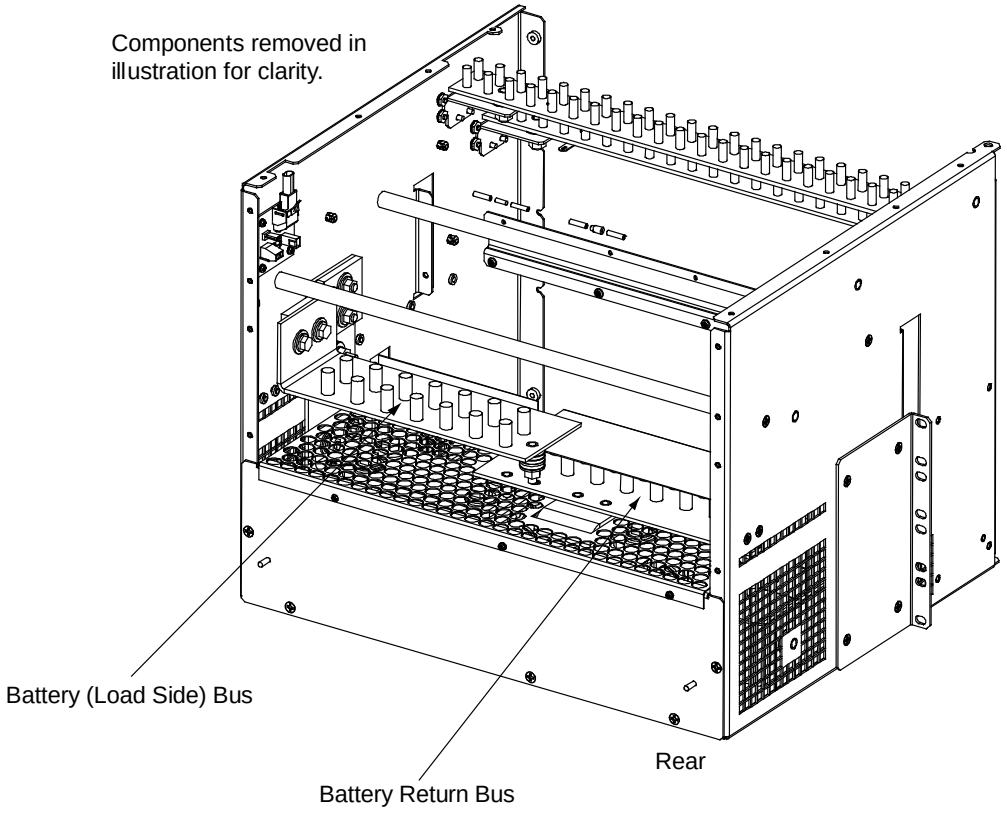

List 21 Shown, List 26 Similar

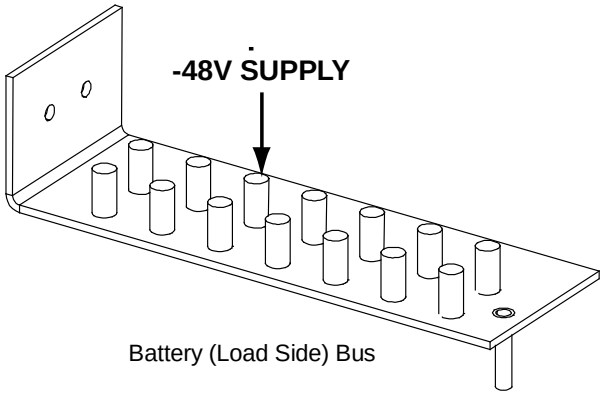

3/8-16” Studs on 1” Centers
(Customer must supply or order hardware)
Maximum Lug Width: 1.062 inches.
Hardware:
3/8" Hex Nut
3/8" Lock Washer
3/8" Flat Washer
Torque to 300 in-lbs.

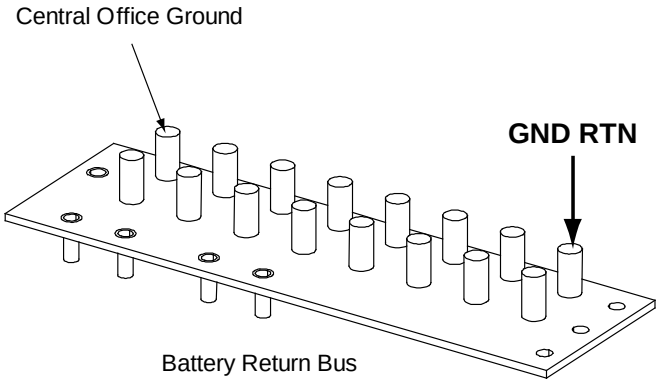

Figure 33
Battery and Central Office Ground Connections
582137100 List 21, List 26 Distribution Cabinet Battery Busbars

© 2026 Vertiv Group Corp. All Rights Reserved.

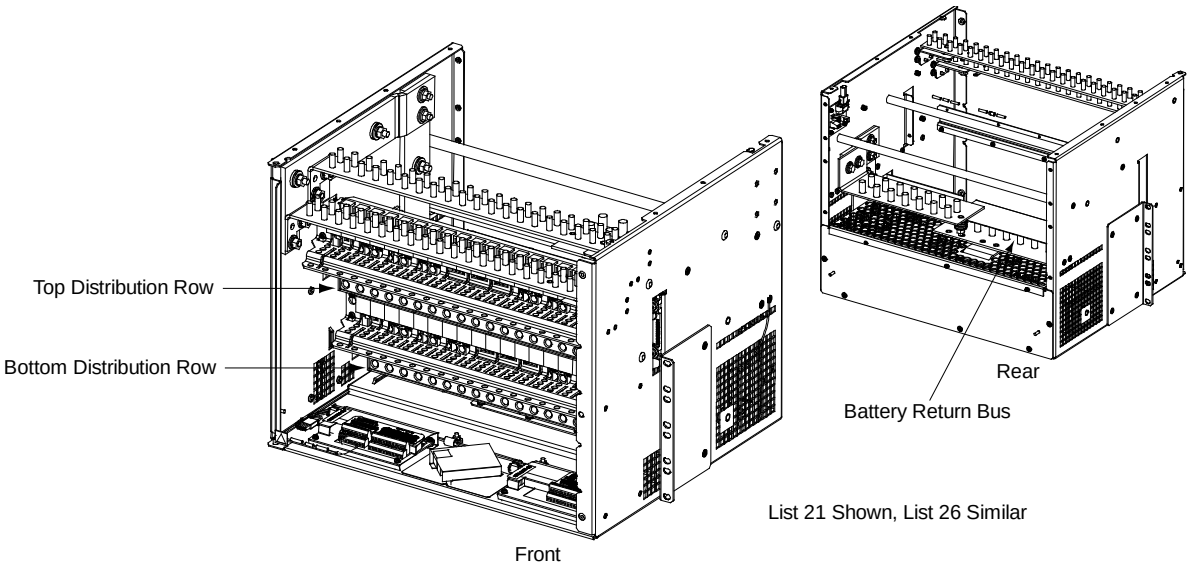

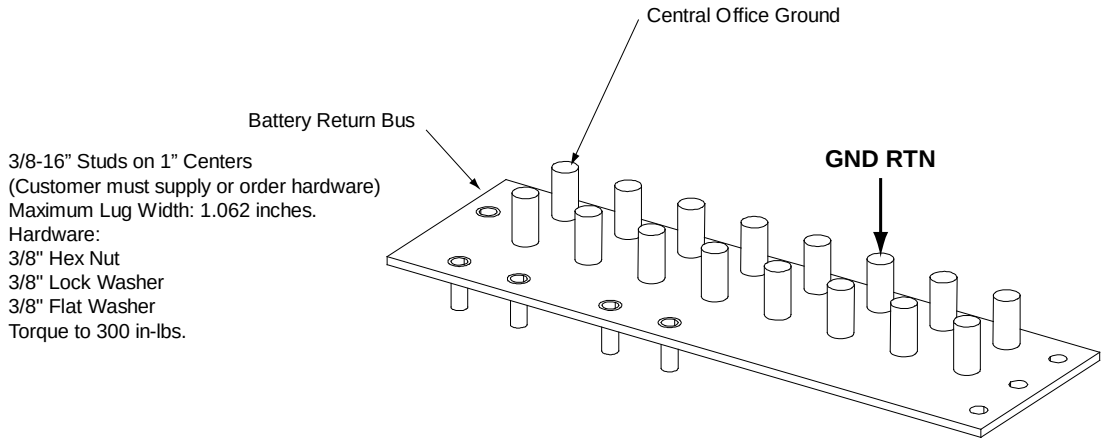

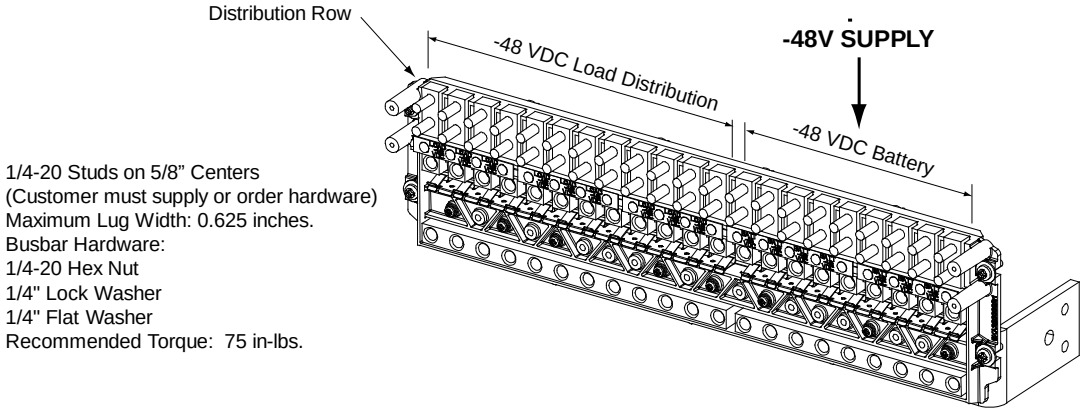

Figure 34
Battery and Central Office Ground Connections
582137100 List 21, List 26 Battery Disconnect Distribution Panels

© 2026 Vertiv Group Corp. All Rights Reserved.

582137100 List 27 Distribution Cabinet

To Battery Busbars

Input battery leads are connected to the battery busbar and battery return busbar. These busbars provide 3/8-16 studs for installation of customer provided two hole lugs that have 3/8 inch bolt clearance holes on 1 inch centers. Customer must provide or order lug mounting hardware.

Battery wire size and lug requirements are determined by site requirements. See Table 18 for available lugs.

Refer to Figure 35.

Remote Distribution Unit (DU) Connections

582137100 List 27 Distribution Cabinet

Remote Distribution Unit (DU) input leads are connected to the remote DU input busbar and battery return busbar. These busbars provide 1/4-20 studs for installation of customer provided two-hole lugs that have 1/4” bolt clearance holes on 5/8” centers. Customer must provide or order lug mounting hardware.

Remote DU wire size and lug requirements are determined by site requirements. See Table 17 for available lugs.

Refer to Figure 35.

1/0 AWG back-to-back terminals maximum per polarity.

© 2026 Vertiv Group Corp. All Rights Reserved.

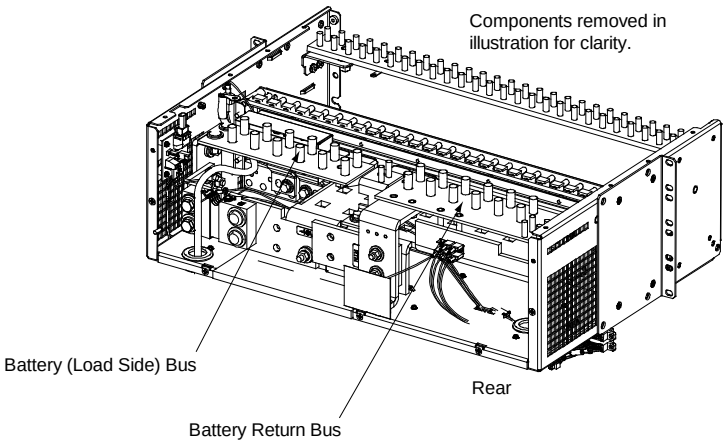

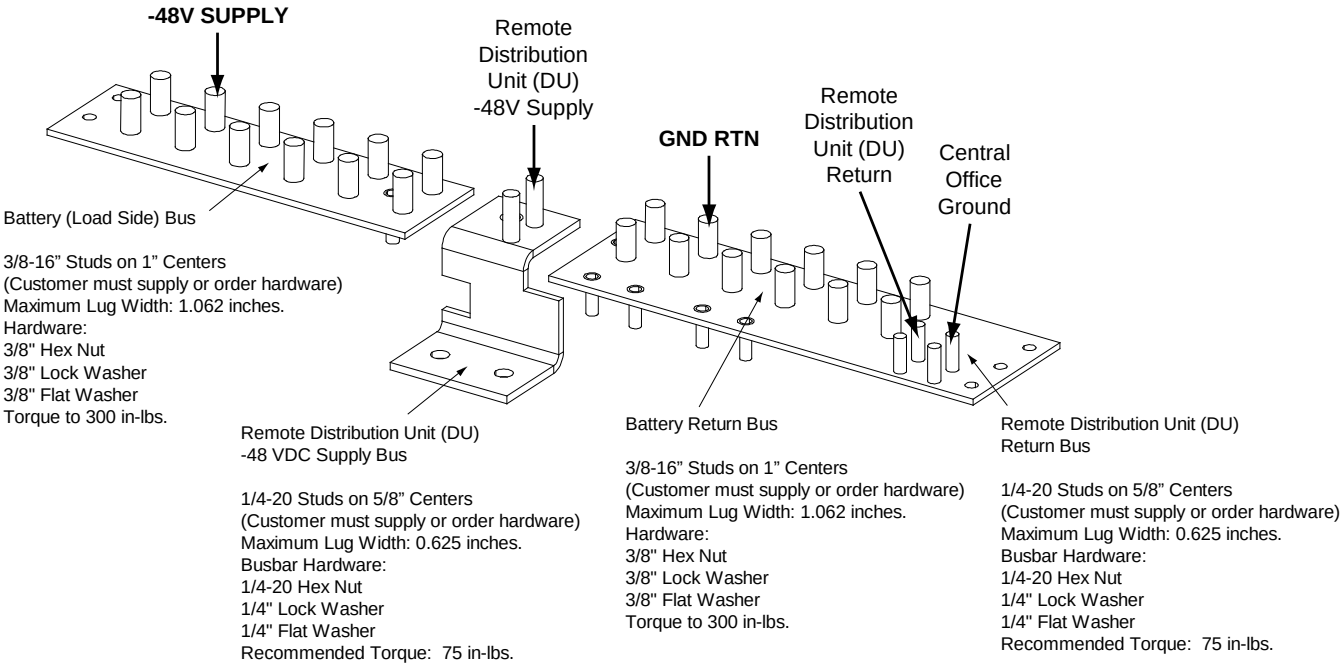

Figure 35
Battery, Remote DU, and Central Office Ground Connections
582137100 List 27 Distribution Cabinet Battery Busbars

© 2026 Vertiv Group Corp. All Rights Reserved.

SPECIFICATIONS

1. SYSTEM
   - 1.1 DC Output Ratings
     - 1.1.1 See page 5.
     - 1.1.2 The product has a short circuit rating of 10,000 DC amperes.
   - 1.2 Rectifier AC Input Ratings
     - 1.2.1 See page 5.
   - 1.3 Solar Converter DC Input Ratings
     - 1.3.1 See page 5.
   - 1.4 Environmental Ratings
     - 1.4.1 Operating Ambient Temperature Range:
       - (A) Without Front Door, Top Covers, and Rear Covers: -40 °C to +65 °C (-40 °F to +149 °F).
       - (B) With Front Door, Top Covers, and Rear Covers: -40 °C to +40 °C (-40 °F to +104 °F).
     - 1.4.2 Storage Ambient Temperature Range: -40 °C to +70 °C (-40 °F to +158 °F).
     - 1.4.3 Humidity: Capable of operating in an ambient relative humidity range of 0% to 95%, non-condensing.
     - 1.4.4 Altitude: Capable of operating in an altitude range of -200 feet to 10,000 feet. The maximum operating ambient temperature should be de-rated by 3 °C per 1000 feet above 6562 feet.
     - 1.4.5 Ventilation Requirements: The system must be mounted so ventilating openings are not blocked and temperature of the air entering the system does not exceed the Operating Ambient Temperature Range stated above. Refer also to “Mounting” below.
     - 1.4.6 Mounting: Refer to “Overall Dimensions” on page 158 for mounting dimensions.
       - This product is intended only for installation in a restricted access location on or above a non-combustible surface.
       - This product must be located in a controlled environment with access to crafts persons only.
       - This product is intended for installation in network telecommunication facilities (CO, vault, hut, or other environmentally controlled electronic equipment enclosure).
       - This product is intended to be connected to the common bonding network in a network telecommunication facility (CO, vault, hut, or other environmentally controlled electronic equipment enclosure).
       - The DC return connection to this system can remain isolated from system frame and chassis (DC-I).
       - This system is suitable for installation as part of the Common Bonding Network (CBN).
       - Rectifier, solar converter, converter, and module mounting assembly(s) ventilating openings must not be blocked and temperature of air entering rectifiers, solar converters, and converters must not exceed the rated operating ambient temperature range.
       - Clearance requirements are:

         Recommended minimum aisle space clearance for the front of each bay is 2’ 6”.

         Recommended minimum aisle space clearance for the rear of each bay is 2’ 0” for any of the following conditions:

         Addition of a module mounting assembly in the field.

         Making input connections to a field installed module mounting assembly.

         Adding battery tray(s) in the field.

         For all other conditions, required minimum spacing from the rear of the system to a wall or other solid structure must not be less than four (4) inches and from the front of the system not less than two (2) inches. This will assure proper airflow through the rectifier, solar converter, and converter modules.

         Note: *Minimum spacing specified for ventilation may not permit replacement of certain components such as busbars or module mounting assemblies.*

© 2026 Vertiv Group Corp. All Rights Reserved.

1.5 Compliance Information Safety Compliance:

This panel is UL Listed for use in DC Power Distribution Centers for Communications Equipment.

1.5.1 NEBS Compliance: Compliance verified by a Nationally Recognized Testing Laboratory (NRTL) per GR-1089-CORE and GR-63-CORE. Contact Vertiv for NEBS compliance reports.

Rectifier and Solar Converter Modules: In order to remain compliant during a fan failure condition, the backup battery connection must be utilized to provide sufficient power to the loads for up to eight (8) hours when the system is operated at greater than 50% output power. If no backup battery connection is used, the system must operate with a redundant module installed.

-48 VDC to +24 VDC Converter Modules: In order to remain compliant during a fan failure condition, the system must operate with a redundant module installed.

-48 VDC to -58 VDC Converter Modules: In order to remain compliant during a fan failure condition, the system must operate with a redundant module installed.

1.5.2 GR-3108: GR-3108 class 2 compliant.

1.6 IB2 and EIB (Controller Interface Board) Ratings

1.6.1 Digital Input Ratings

(A) Maximum Voltage Rating: 60 VDC.

(B) Active High: > 19 VDC.

(C) Active Low: < 1 VDC.

1.6.2 Relay Ratings

(A) Steady State: 0.5 A @ 60 VDC; 1.0 A @ 30 VDC.

(B) Peak: 3 A @ 30 VDC.

2. MODULE MOUNTING ASSEMBLY

Refer to PD588705300.

3. OPTIONAL INVERTER SYSTEM

3.1 AC Input and DC Input Ratings

3.1.1 Operating Voltage Range: 42 VDC to 58 VDC, 96 VAC to 140 VAC.

3.1.2 Frequency Range: 47 Hz to 53 Hz or 57 Hz to 63 Hz.

3.1.3 Stopping Voltages: Refer to 3.1.1.

3.1.4 Restart Voltages: After low-voltage shutdown 48 VDC / 101 VAC; after high-voltage shutdown, 57 VDC / 135 VAC.

3.1.5 Maximum Input Current at Maximum Output Load (per inverter module): Maximum 26.4 A @ -42 VDC, Maximum 11 A @ 96 VAC.

3.2 AC Output Ratings

3.2.1 Nominal Output Voltage: 120 VAC.

3.2.2 Output Voltage Tolerance: Fixed 120 VAC.

3.2.3 Output Frequency: 50 Hz or 60 Hz.

3.2.4 Total Harmonic Distortion (linear load): < 3% @ 100% linear load for inverter.

3.2.5 Nominal Output Power: 1000 W / 1000 VA per inverter.

3.2.6 Overload: 110% to 125% @ 42 VDC to 48 VDC (15 s), 125% @ 96 VAC to 140 VAC (15s), max input current 3x (120 ms) per inverter.

3.2.7 Power Factor: = The power factor is between -0.65 to 1 and +0.9 to 1.

4. RECTIFIER

Refer to the Rectifier Instructions (UM1R482000E3).

5. SOLAR CONVERTER

Refer to the Solar Converter Instructions (UM1S482000E3).

6. -48 VDC TO +24 VDC CONVERTER

Refer to the Converter Instructions (UM1C48241500).

7. -48 VDC TO -58 VDC CONVERTER

Refer to the Converter Instructions (UM1C48582000P3).

© 2026 Vertiv Group Corp. All Rights Reserved.

8. INVERTER

   Refer to the Inverter Instructions (UM1I1201000).

9. CONTROLLER

   Refer to the NCU Controller Instructions (UM1M830BNA).
   For controller factory settings, refer to the Controller Configuration Drawing (C-drawing).

© 2026 Vertiv Group Corp. All Rights Reserved.

MECHANICAL SPECIFICATIONS

Overall Dimensions

Refer to PD588705300 for module mounting assembly dimensions.

Refer to Table 13 for relay rack dimensions.

List 20 Distribution Cabinet

1. All dimensions are in inches unless otherwise specified.
2. Finish: Front door textured dark gray, all other galvanized steel.

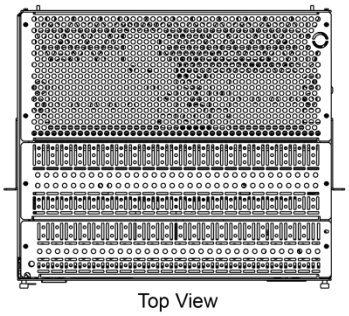

Top View

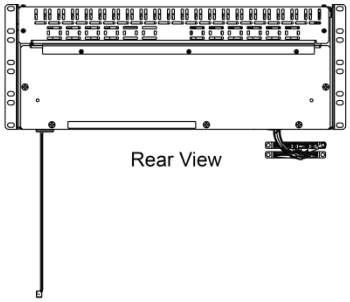

Rear View

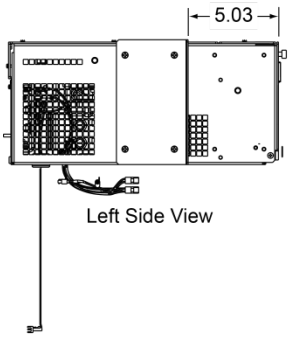

Left Side View

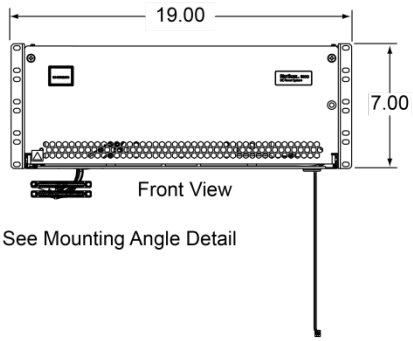

Front View

See Mounting Angle Detail

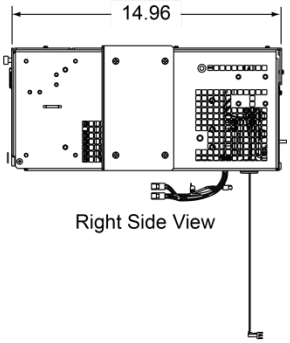

Right Side View

Mounting Angle Detail

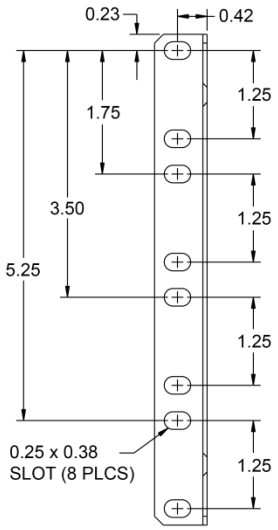

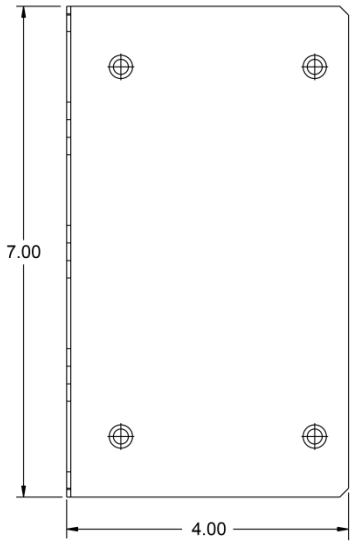

© 2026 Vertiv Group Corp. All Rights Reserved.

List 21 Distribution Cabinet

1. All dimensions are in inches unless otherwise specified.
2. Finish: Front door textured dark gray, all other galvanized steel.

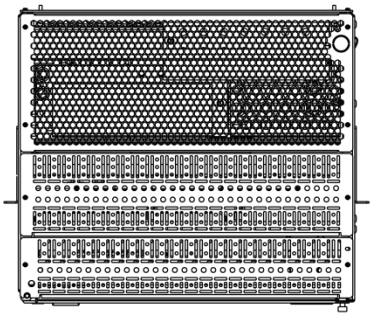

Top View

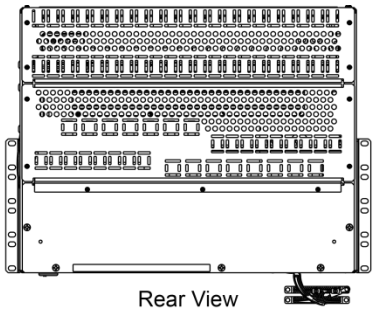

Rear View

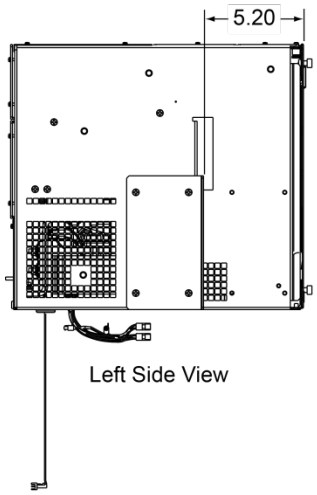

Left Side View

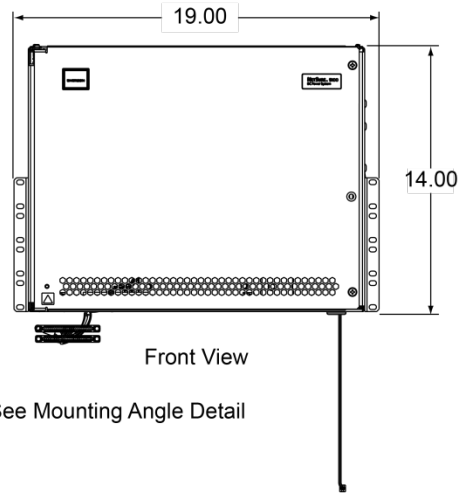

Front View

See Mounting Angle Detail

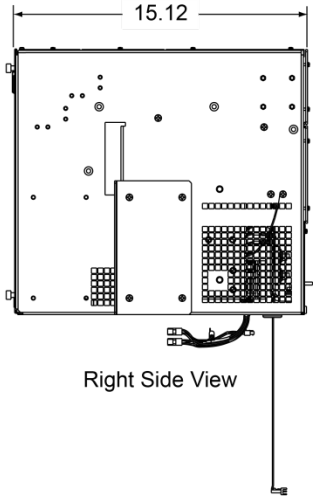

Right Side View

Mounting Angle Detail

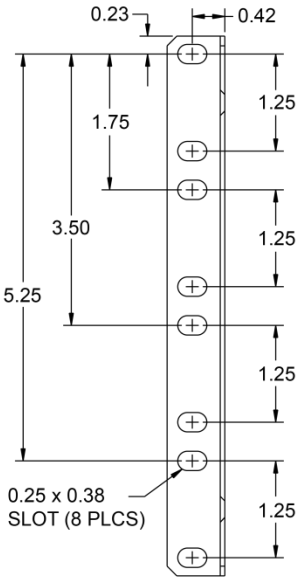

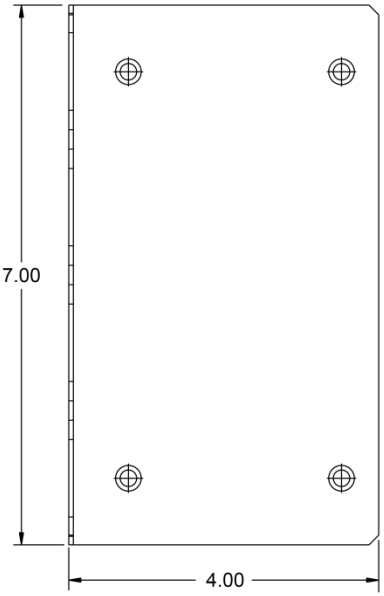

© 2026 Vertiv Group Corp. All Rights Reserved.

List 25 Distribution Cabinet

1. All dimensions are in inches unless otherwise specified.
2. Finish: Front door textured dark gray, all other galvanized steel.

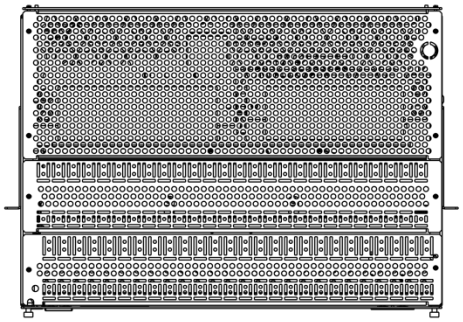

Top View

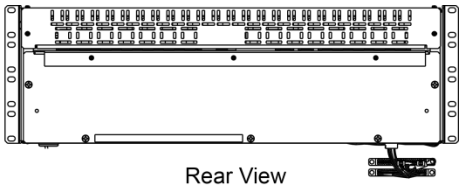

Rear View

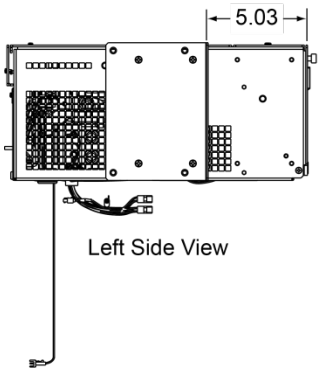

Left Side View

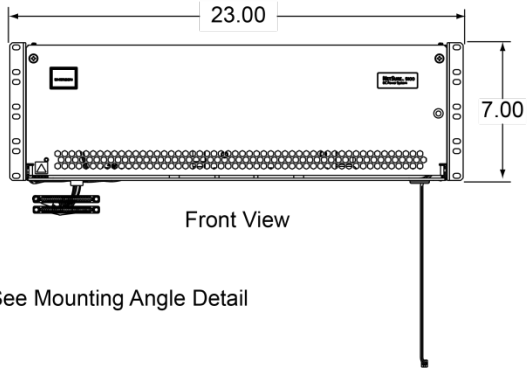

Front View

See Mounting Angle Detail

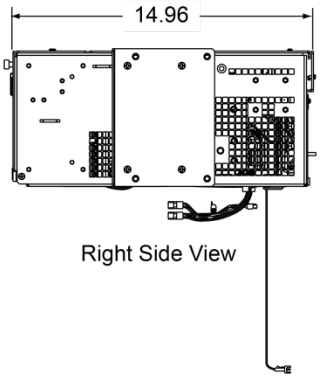

Right Side View

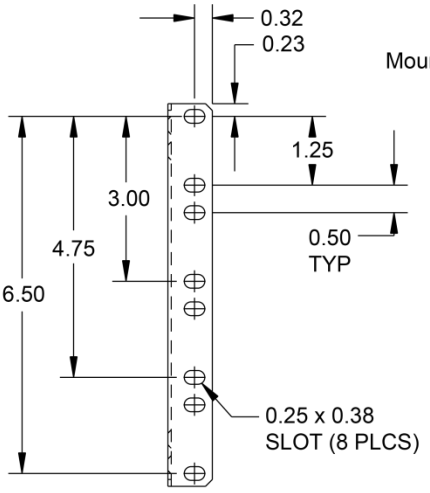

Mounting Angle Detail

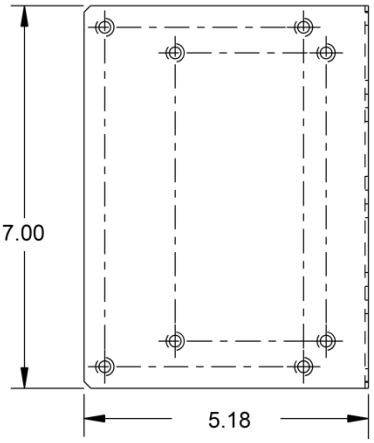

© 2026 Vertiv Group Corp. All Rights Reserved.

List 26 Distribution Cabinet

1. All dimensions are in inches unless otherwise specified.
2. Finish: Front door textured dark gray, all other galvanized steel.

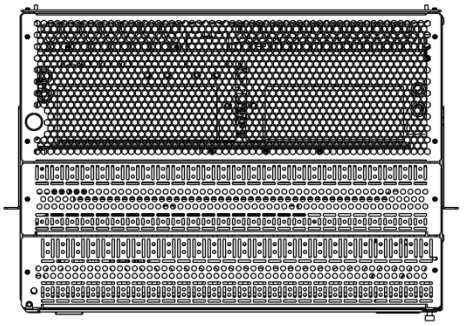

Top View

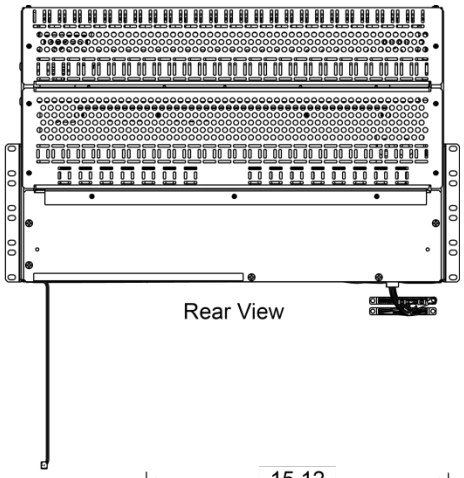

Rear View

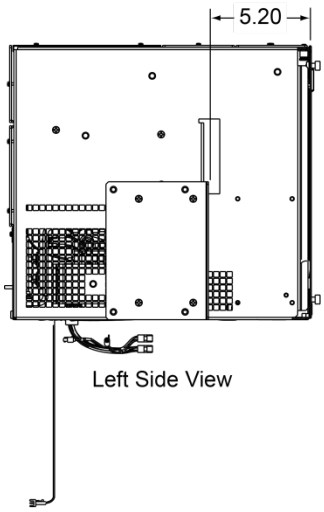

Left Side View

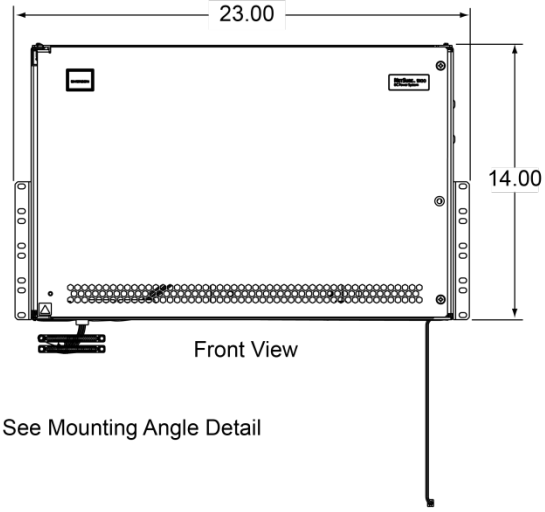

Front View

See Mounting Angle Detail

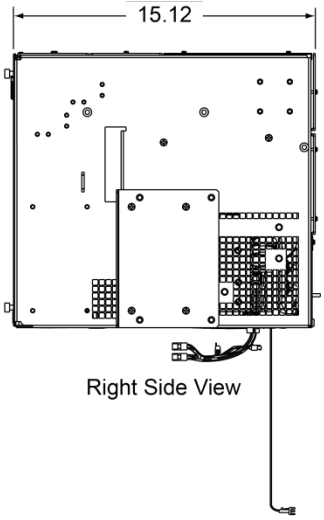

Right Side View

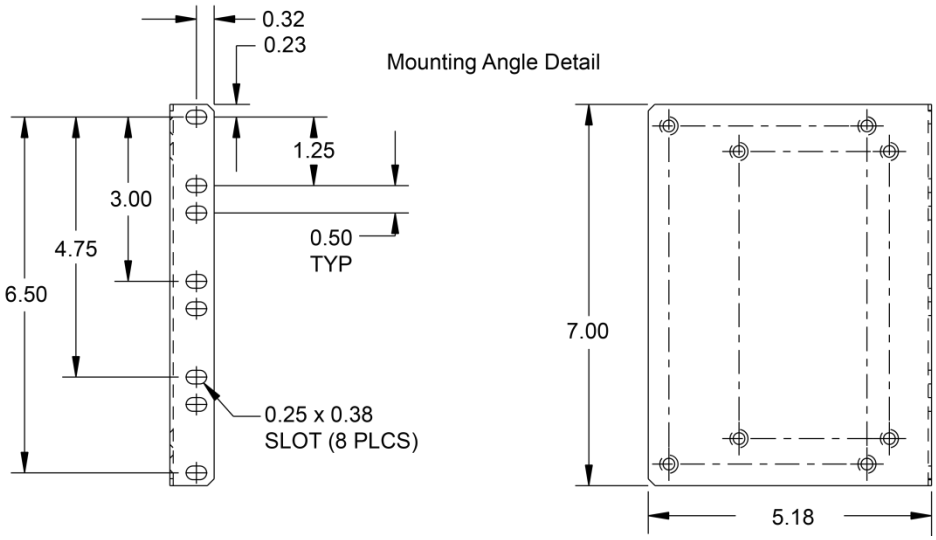

Mounting Angle Detail

© 2026 Vertiv Group Corp. All Rights Reserved.

List 27 Distribution Cabinet

1. All dimensions are in inches unless otherwise specified.
2. Finish: Front door textured dark gray, all other galvanized steel.

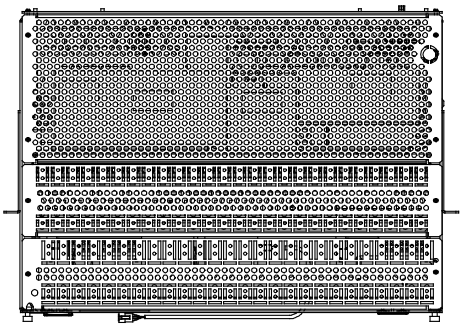

Top View

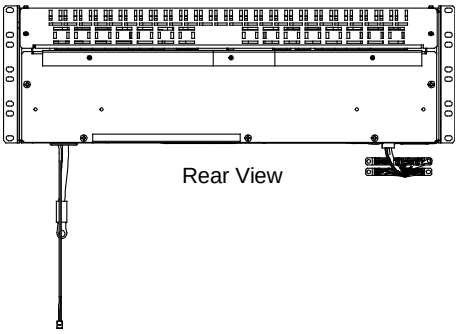

Rear View

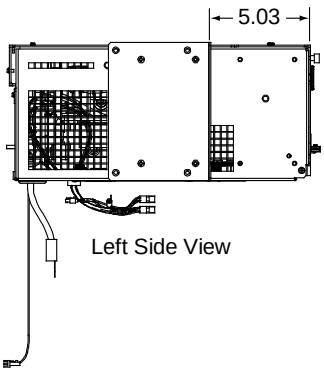

Left Side View

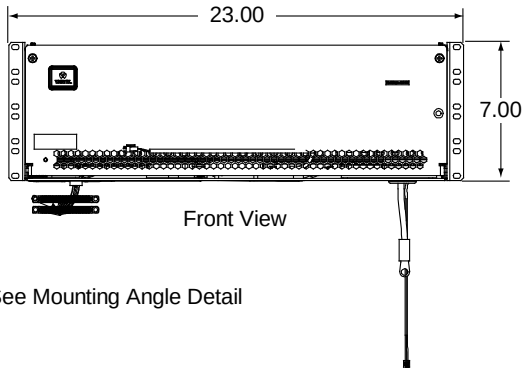

Front View

See Mounting Angle Detail

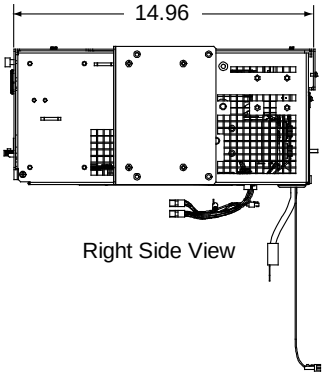

Right Side View

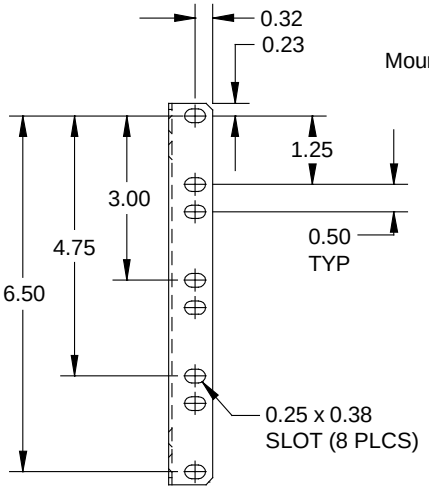

Mounting Angle Detail

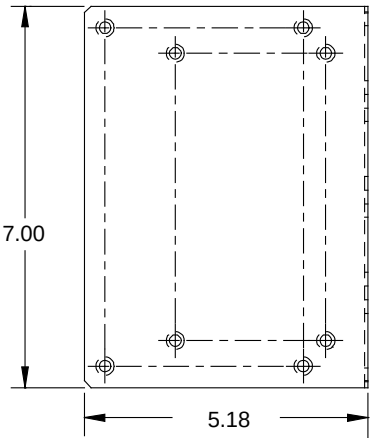

© 2026 Vertiv Group Corp. All Rights Reserved.

List 40 Rectifier AC Input / Solar Converter DC Input Panel

1. All dimensions are in inches unless otherwise specified.
2. Finish: Galvanized Steel.
3. Dimension for 5-shelves cover.
   4-shelves cover is 7.07.
   3-shelves cover is 5.32.
   2-shelves cover is 3.57.
   1-shelf cover is 1.82.

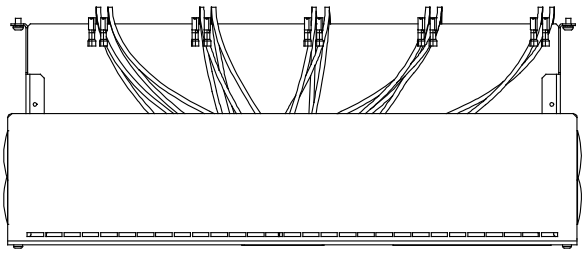

Top View

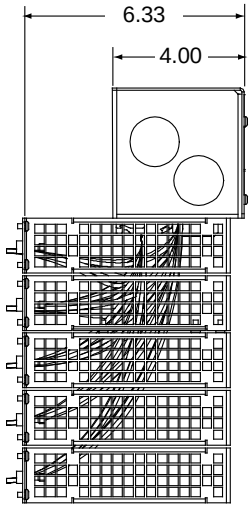

Left Side View

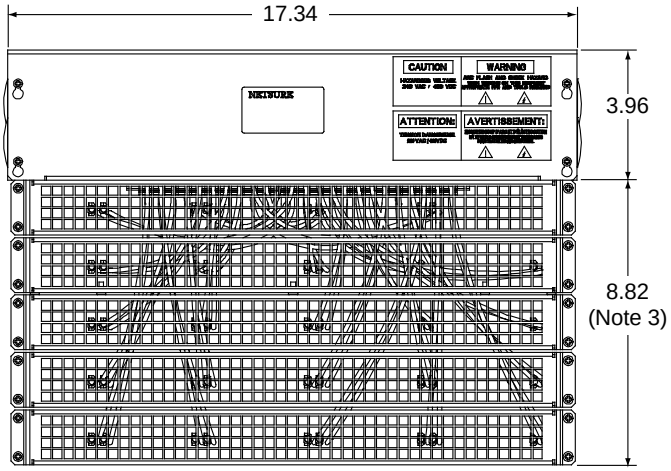

Front View

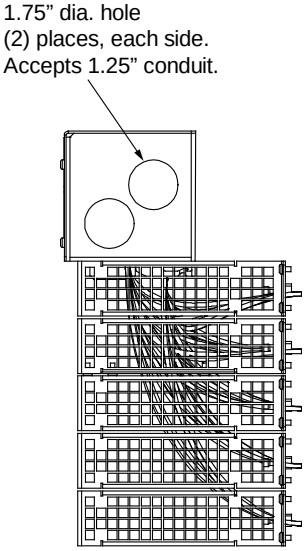

Right Side View

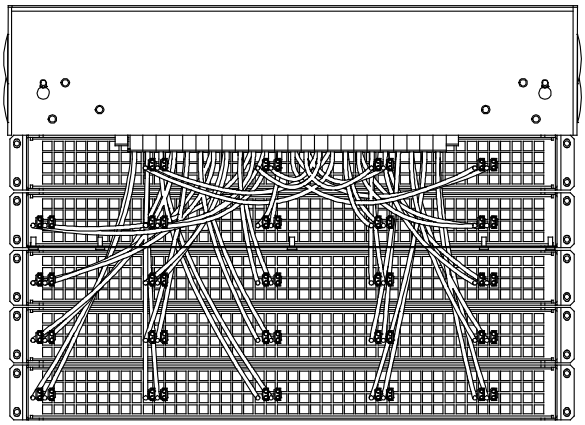

Rear View

© 2026 Vertiv Group Corp. All Rights Reserved.

List 45 Rectifier AC Input / Solar Converter DC Input Panel

1. All dimensions are in inches unless otherwise specified.
2. Finish: Galvanized Steel.
3. Dimension for 5-shelves cover.
   4-shelves cover is 7.07.
   3-shelves cover is 5.32.
   2-shelves cover is 3.57.
   1-shelf cover is 1.82.

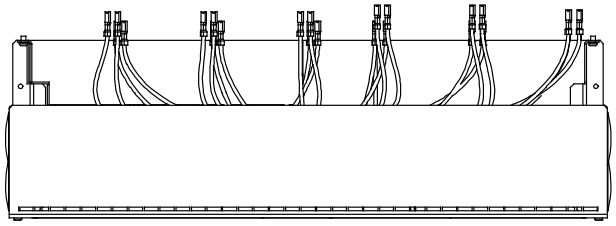

Top View

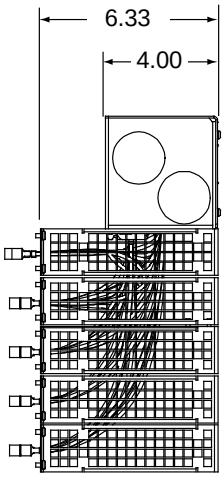

Left Side View

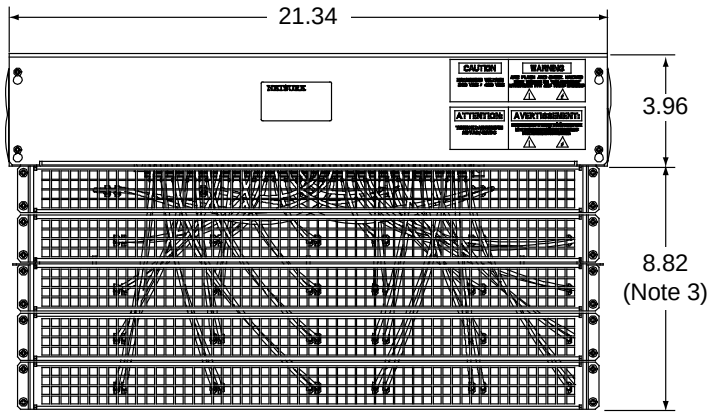

Front View

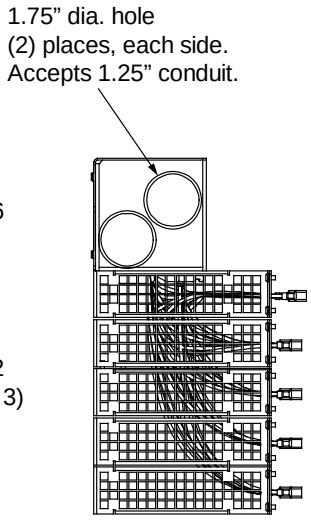

Right Side View

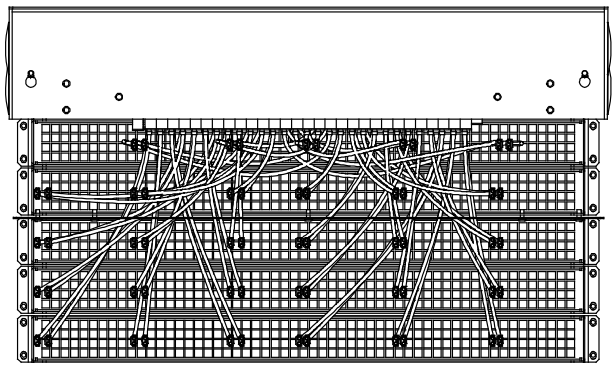

Rear View

© 2026 Vertiv Group Corp. All Rights Reserved.

List 46 Rectifier AC Input Panel

1. All dimensions are in inches unless otherwise specified.
2. Finish: Galvanized Steel.
3. Dimension for 3-shelves cover.
   2-shelves cover is 3.5.
   1-shelf cover is 1.75.

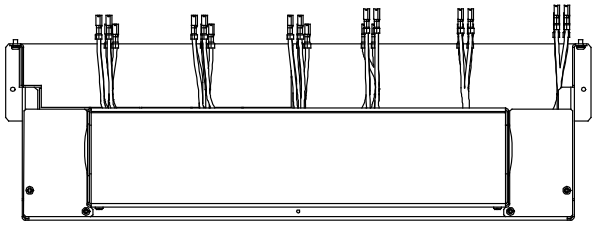

Top View

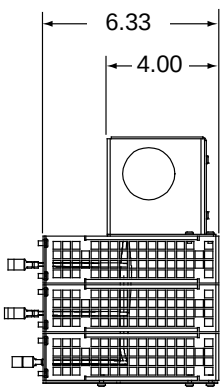

Left Side View

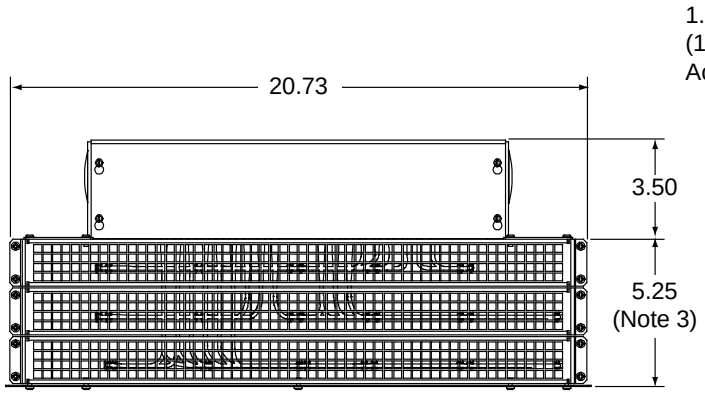

Front View

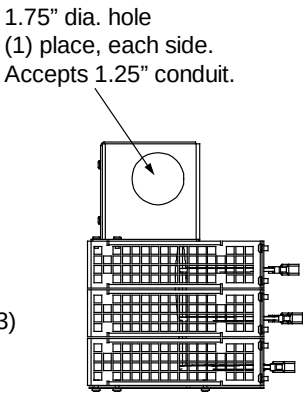

Right Side View

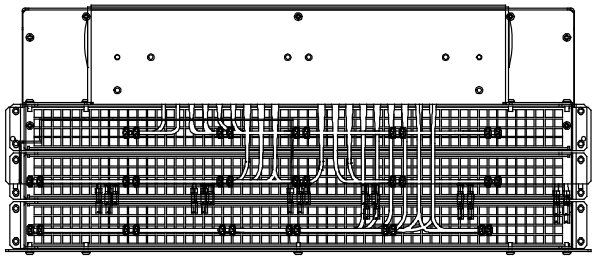

Rear View

© 2026 Vertiv Group Corp. All Rights Reserved.

List 50 Inverter System

Notes:
1. All dimensions are in inches unless otherwise specified.
2. Finish:
   Faceplates: Textured Gray.
   Other Surfaces: Bright Zinc.

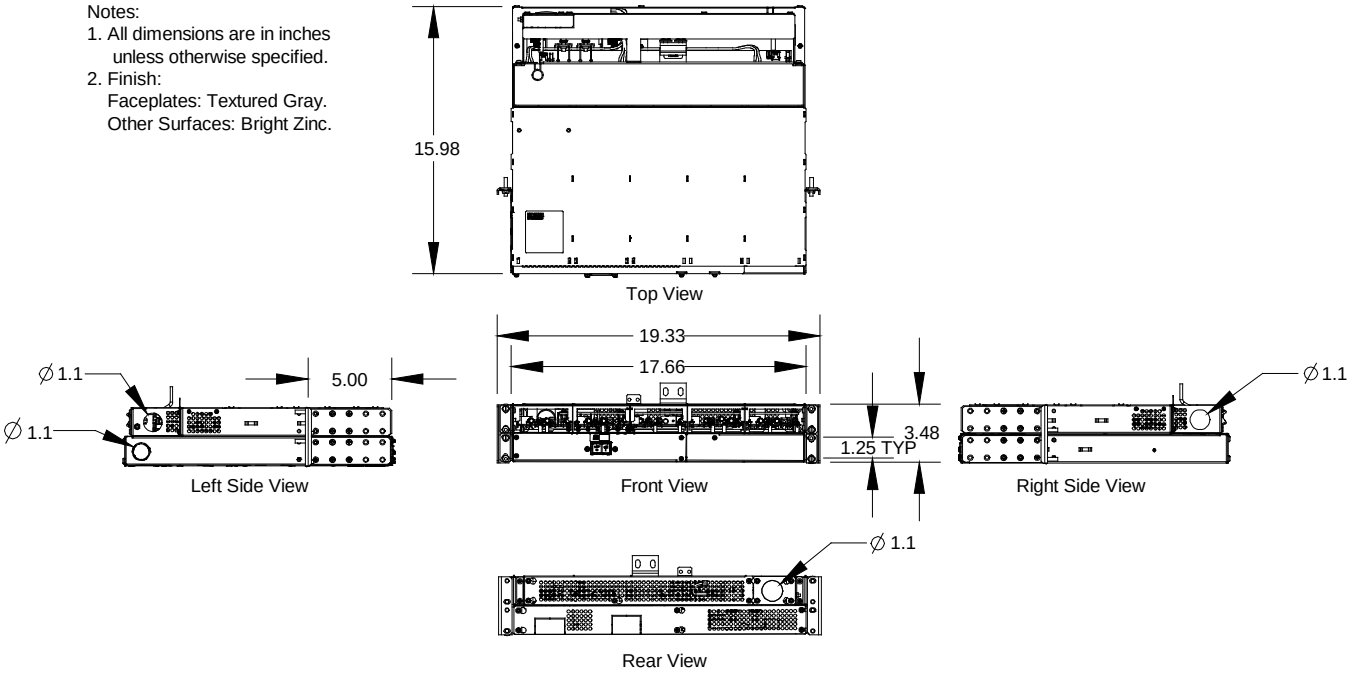

List 51 Inverter System

Notes:
1. All dimensions are in inches unless otherwise specified.
2. Finish:
   Faceplates: Textured Gray.
   Other Surfaces: Bright Zinc.

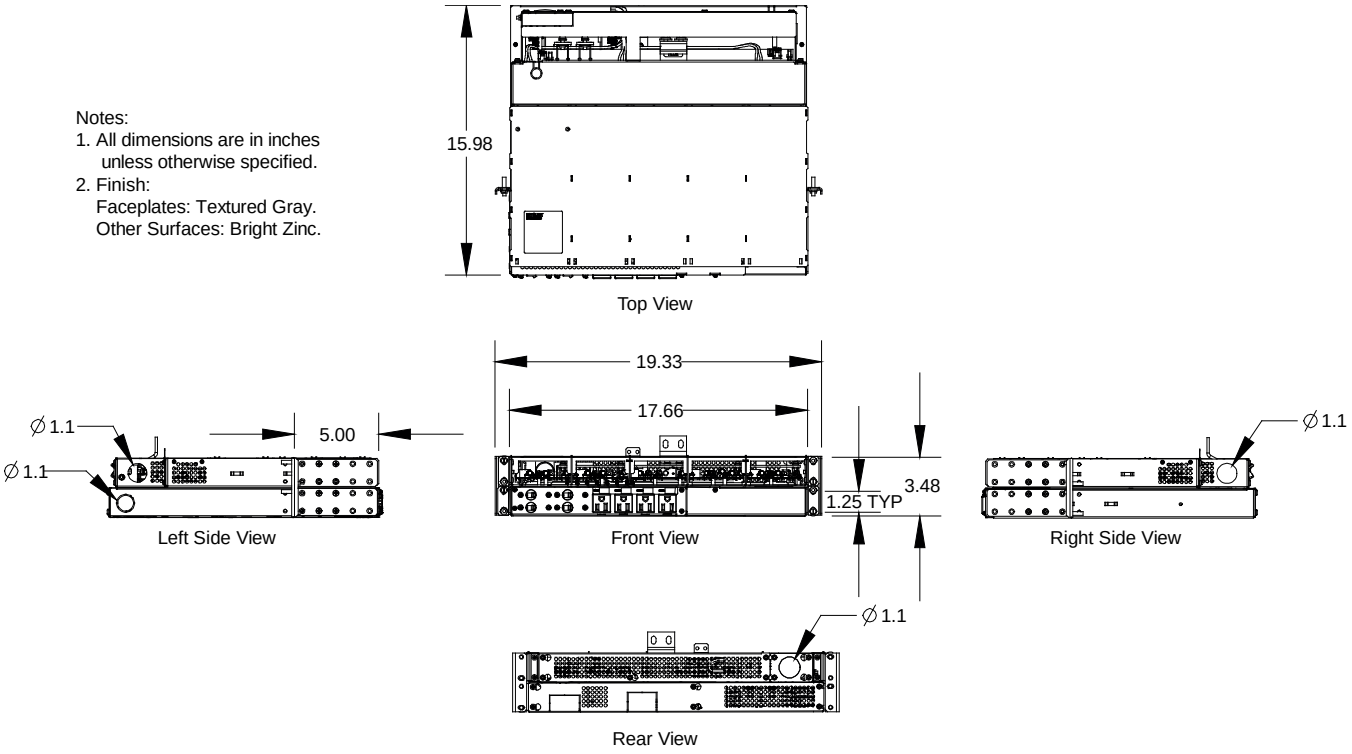

© 2026 Vertiv Group Corp. All Rights Reserved.

List 52 Inverter System

Notes:
1. All dimensions are in inches unless otherwise specified.
2. Finish:
Faceplates: Textured Gray.
Other Surfaces: Bright Zinc.

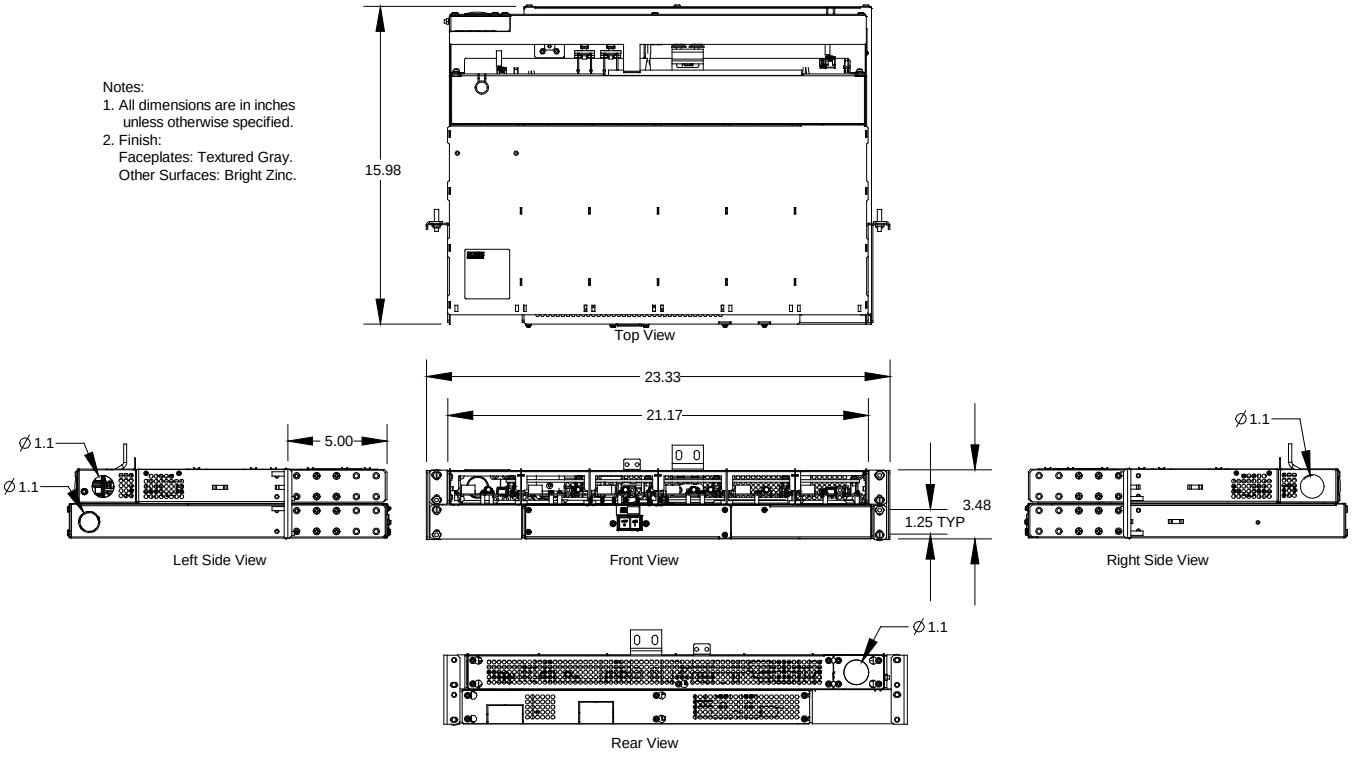

List 53 Inverter System

Notes:
1. All dimensions are in inches unless otherwise specified.
2. Finish:
Faceplates: Textured Gray.
Other Surfaces: Bright Zinc.

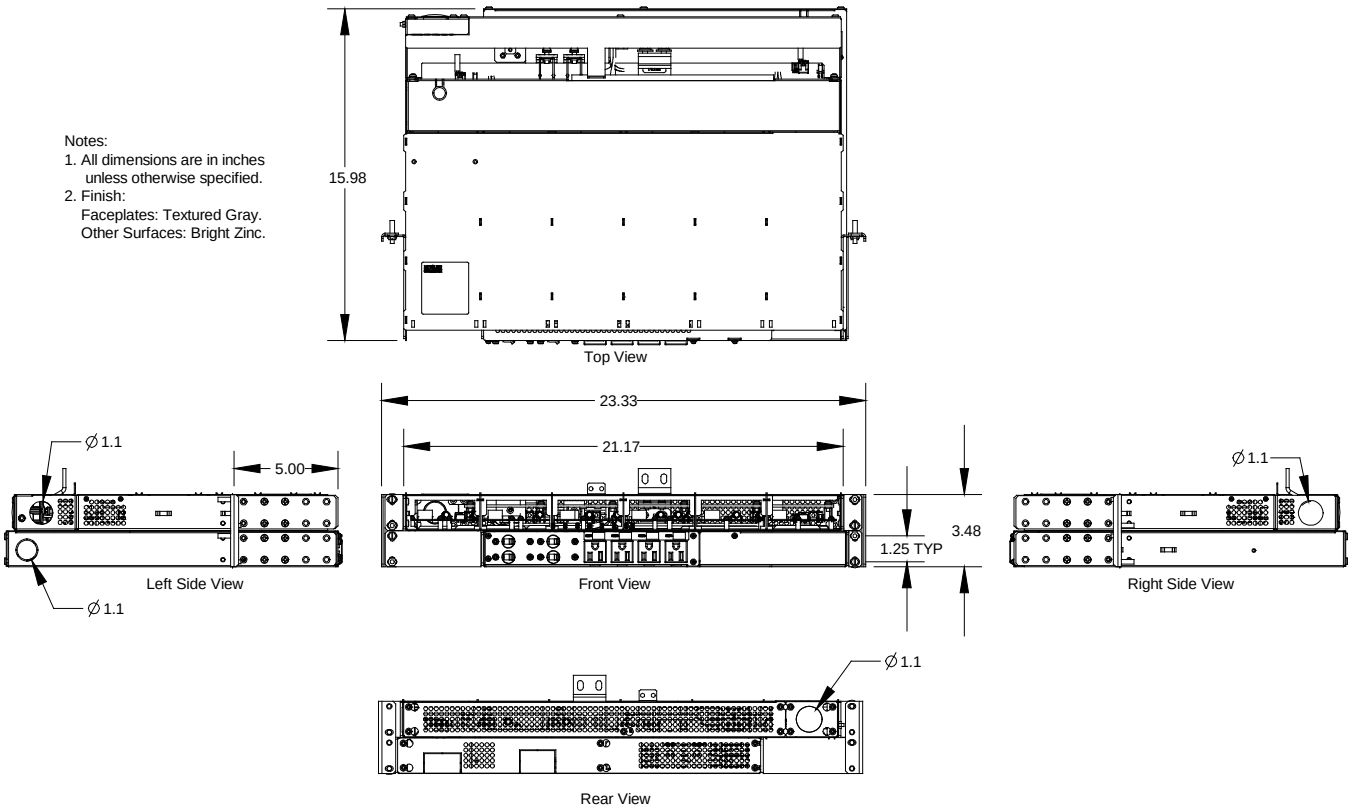

© 2026 Vertiv Group Corp. All Rights Reserved.

List 54 Inverter System

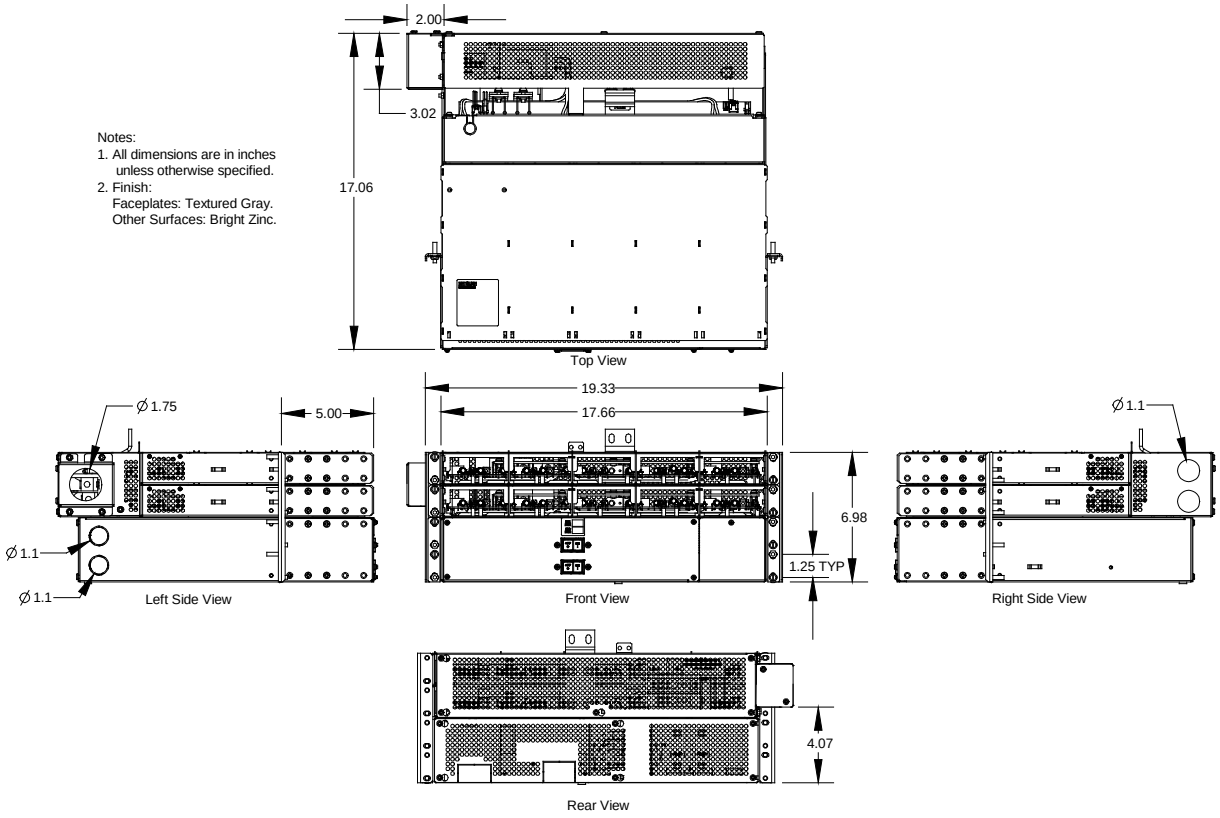

List 55 Inverter System

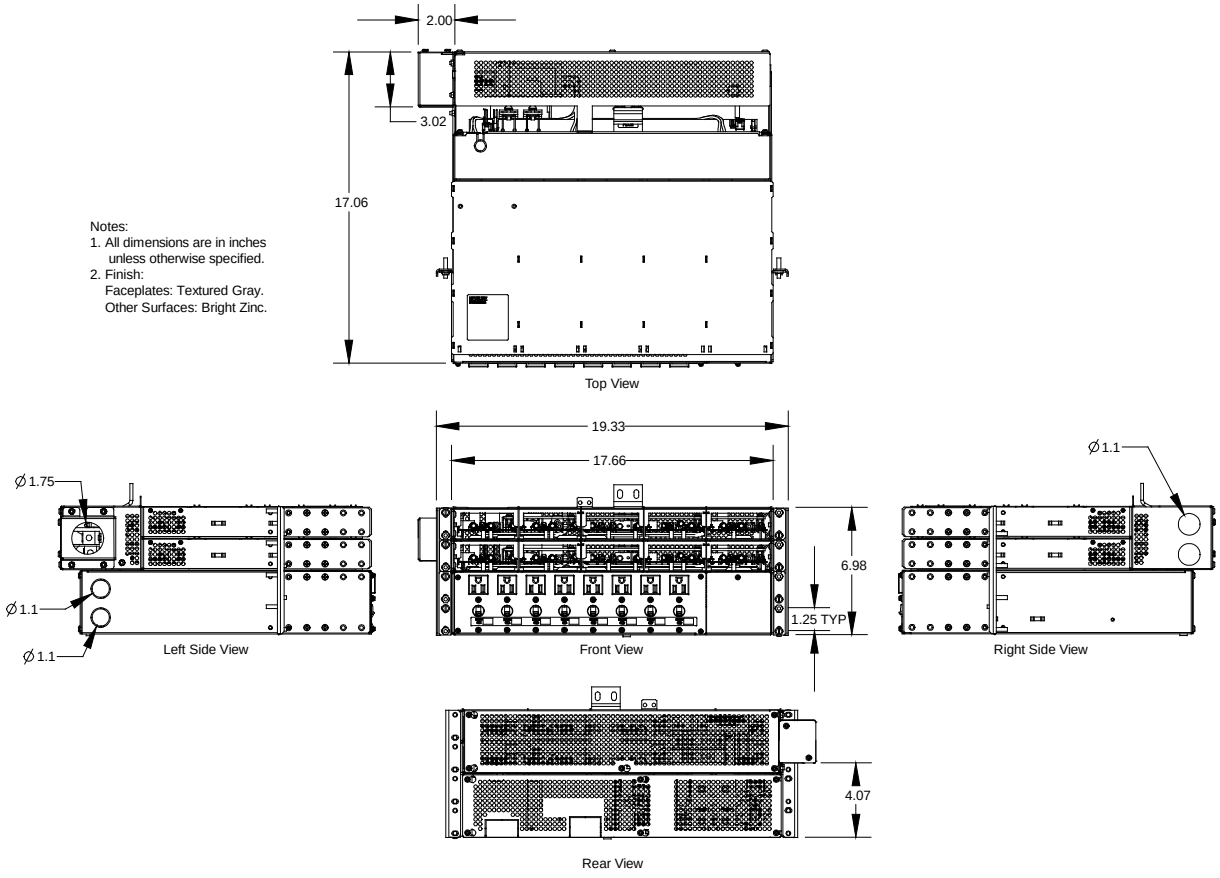

© 2026 Vertiv Group Corp. All Rights Reserved.

List 56 Inverter System

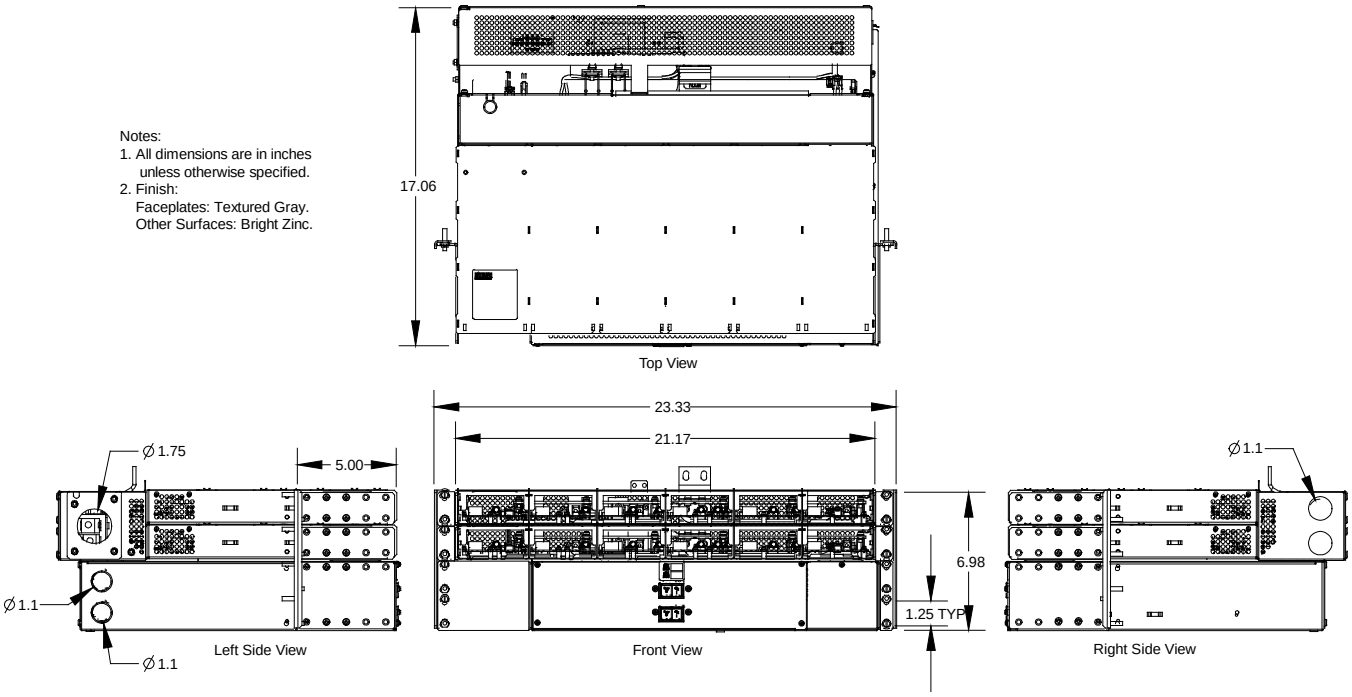

List 57 Inverter System

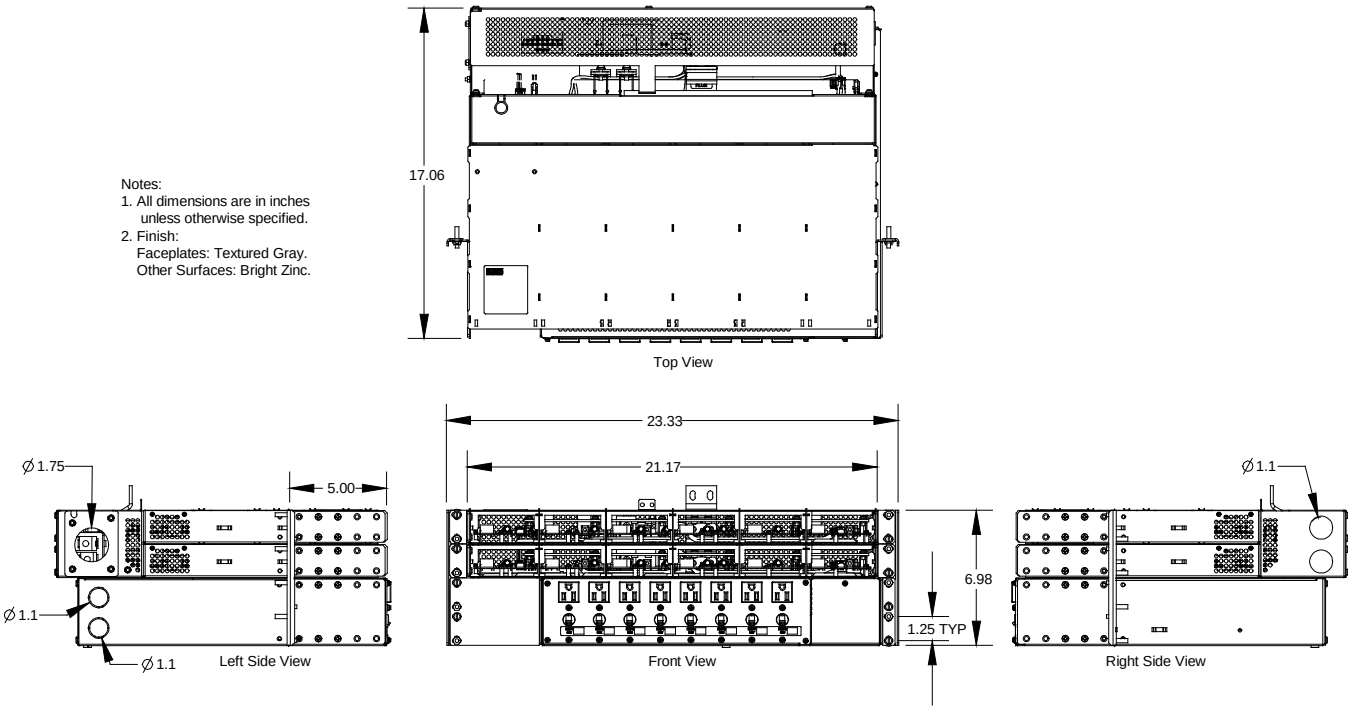

© 2026 Vertiv Group Corp. All Rights Reserved.

List 60 Hybrid Connection Cabinet

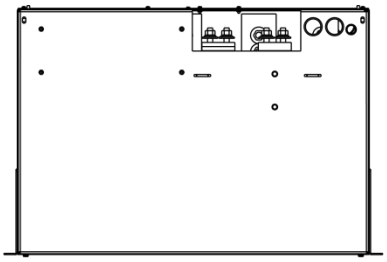

Top View

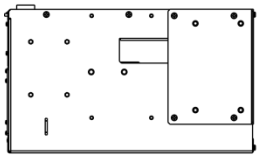

Left Side View

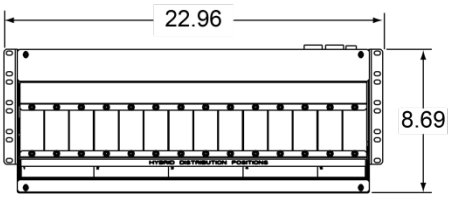

Front View

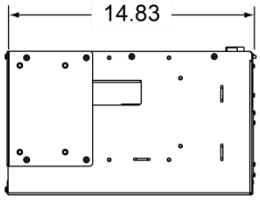

Right Side View

See Mounting Angle Detail

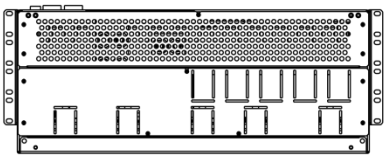

Rear View

1. All dimensions are in inches unless otherwise specified.
2. Finish: Front door textured dark gray, all other galvanized steel.

Mounting Angle Detail

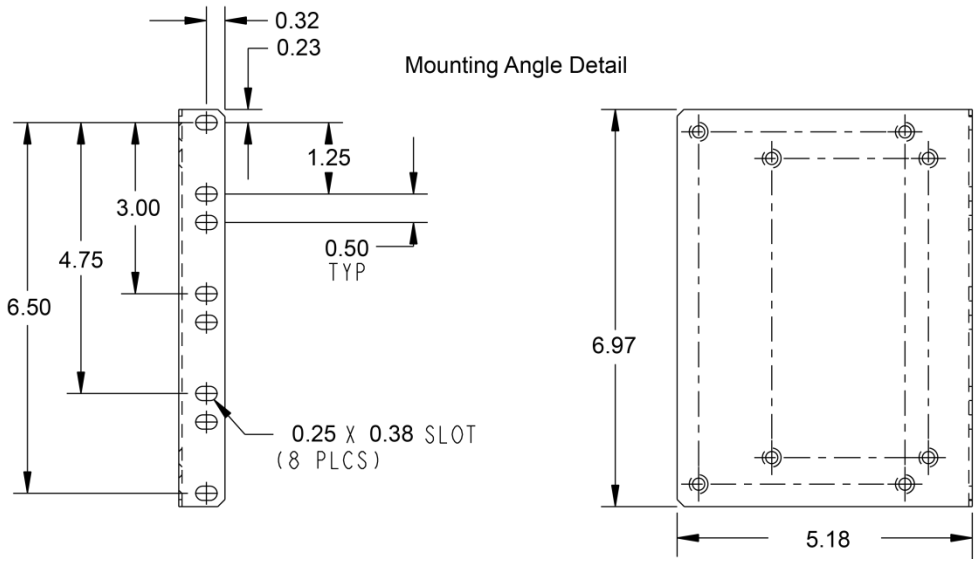

© 2026 Vertiv Group Corp. All Rights Reserved.

List 61 Solar Connection Cabinet

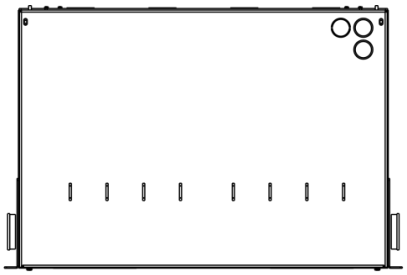

Top View

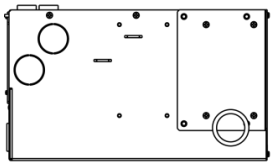

Left Side View

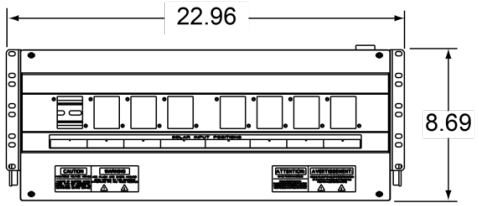

Front View

See Mounting Angle Detail

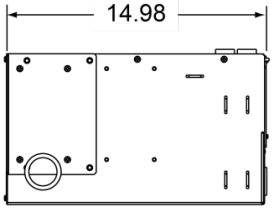

Right Side View

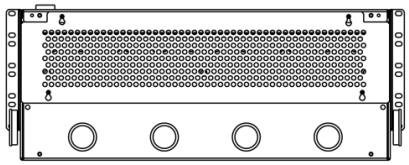

Rear View

1. All dimensions are in inches unless otherwise specified.
2. Finish: Front door textured dark gray, all other galvanized steel.

Mounting Angle Detail

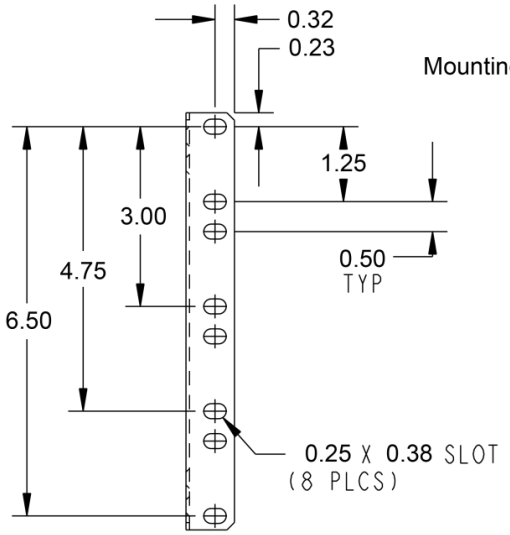

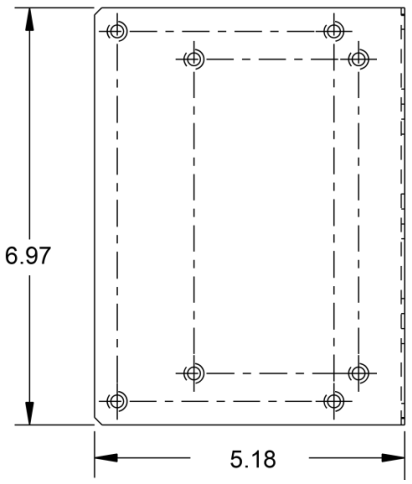

© 2026 Vertiv Group Corp. All Rights Reserved.

List KG GMT Fuse Distribution Panel

Notes:
1. Dimensions are in inches, unless otherwise specified.
2. Finish: Textured Dark Gray.
3. Weight:
   Net: 9 lbs.
   Shipping:

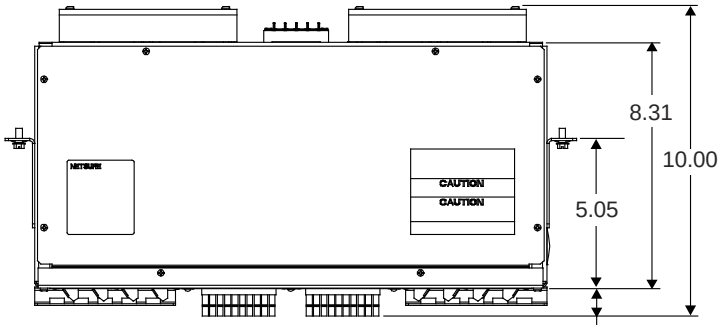

Top View

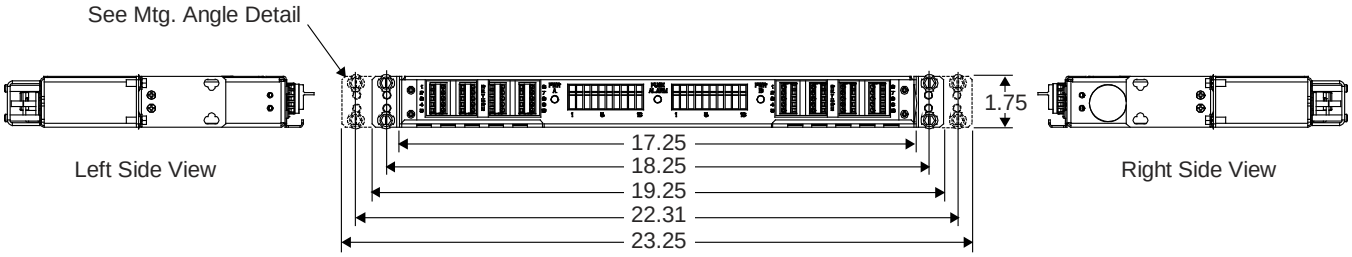

Left Side View

Front View

Right Side View

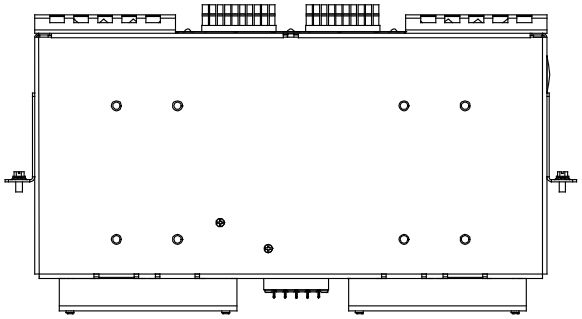

Bottom View

Mounting Angle Detail

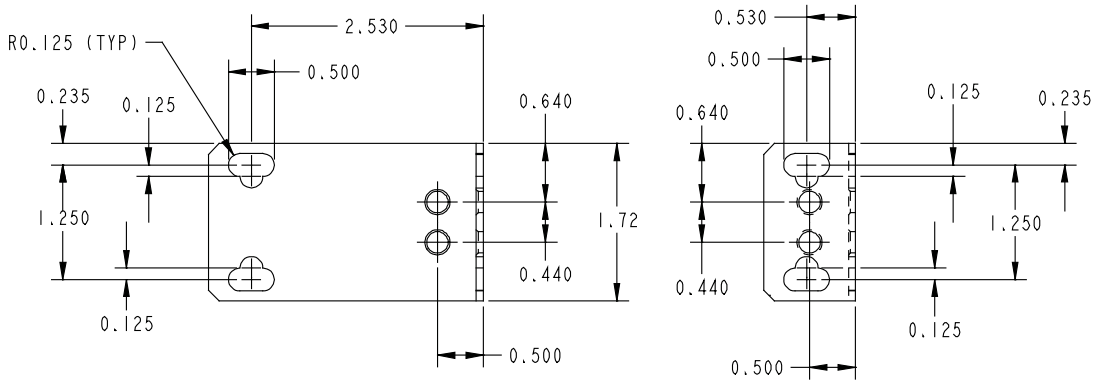

© 2026 Vertiv Group Corp. All Rights Reserved.

List 93 (23" Wide Battery Tray)

Optional Battery Disconnect Circuit Breakers
(Shown on Right Side, Available on Either Side)

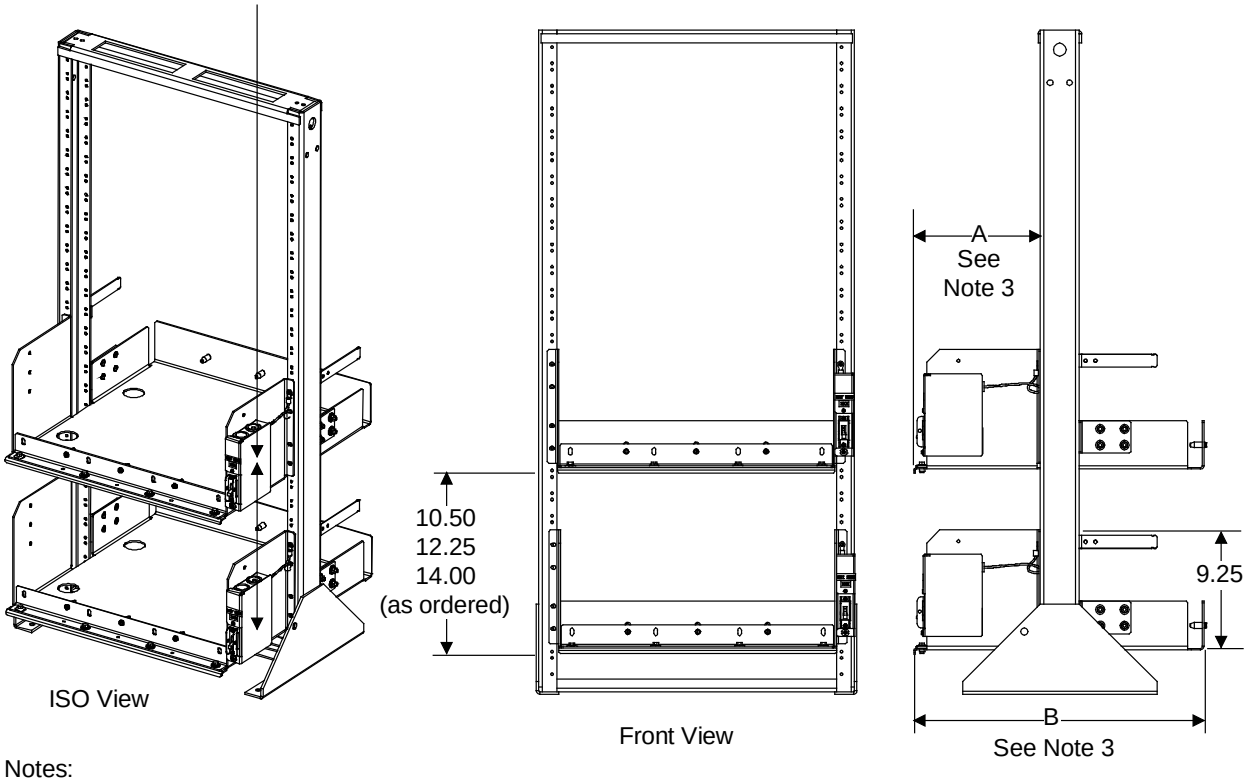

ISO View

Front View

Right Side View

Notes:

1. All dimensions are in inches, unless otherwise specified.
2. P/N 559806 tray shown. Other part numbers are similar.
3.

Tray P/N	Dimension A	Dimension B
559806	9.78	24.44
559807	6.90	12.50
559808	10.48	23.14
10012262	10.80	24.79

4. Weight in LBS. (per tray, less batteries).

Part No.	With Circuit Breaker Option	Without Circuit Breaker Option
559806	33 lbs	29 lbs
559807	20 lbs	18 lbs
559808	25 lbs	23 lbs
10012262	38 lbs	36 lbs

5. Finish: Textured Dark Gray.
6. A system can accommodate up to four (4) battery trays, depending on rack size and tray spacing.

© 2026 Vertiv Group Corp. All Rights Reserved.

List 94 (19" Wide Battery Tray)

Optional Battery Disconnect Circuit Breakers
(Shown on Right Side, Available on Either Side)

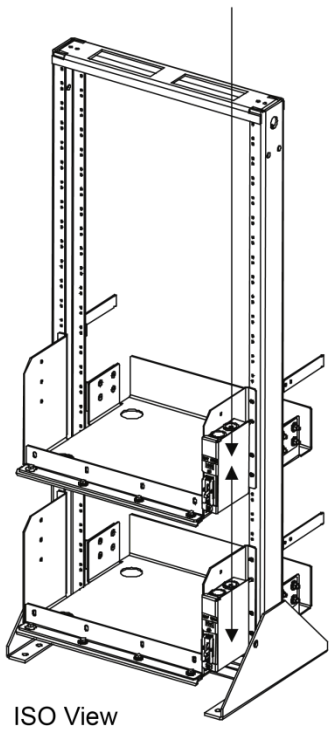

ISO View

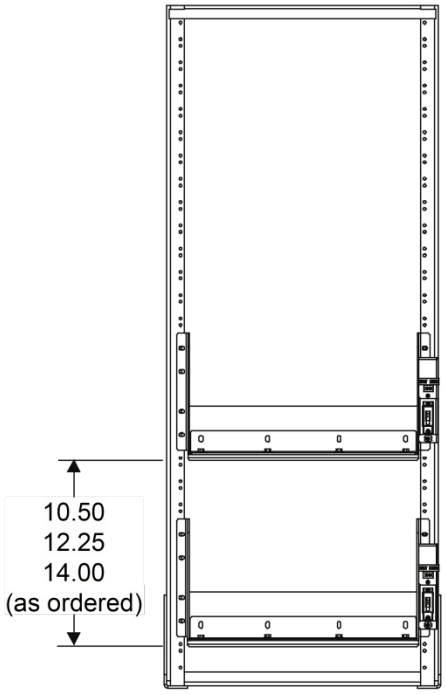

Front View

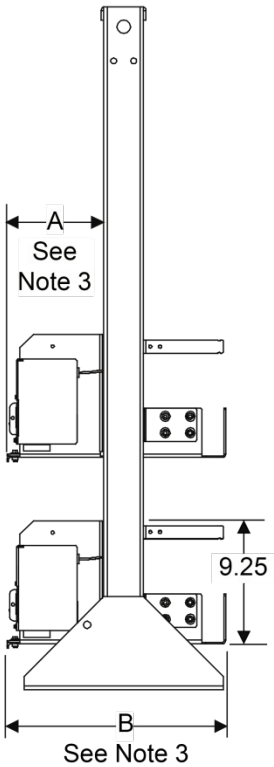

Right Side View

Notes:

1. All dimensions are in inches, unless otherwise specified.
2. P/N 559809 tray shown. Other part numbers are similar.
3.

Tray P/Ns	Dimension A	Dimension B
559809	7.78	17.04
559810	7.28	20.95
559811	6.90	12.50
559812	7.98	23.04

4. Weight in LBS. (per tray, less batteries).

Tray P/Ns	With Circuit Breaker Option	Without Circuit Breaker Option
559809	25.0 lbs	23.0 lbs
559810	25.3 lbs	23.3 lbs
559811	18.5 lbs	16.5 lbs
559812	26.0 lbs	24.0 lbs

5. Finish: Textured Dark Gray.
6. A system can accommodate up to four (4) battery trays, depending on rack size and tray spacing.

© 2026 Vertiv Group Corp. All Rights Reserved.

Weights

List Number or Part Number	Net Weight (lbs), each	Description
Distribution Cabinet (without distribution panels)		
58213710020	33.7	Distribution Cabinet, 1 Row, 19”
58213710021	39.6	Distribution Cabinet, 2 Rows, 19”
58213710025	41.5	Distribution Cabinet, 1 Row, 23”
58213710026	47.3	Distribution Cabinet, 2 Rows, 23”
58213710027	44.0	Distribution Cabinet, 1 Row, 23”
Optional Inverter System		
58213710050	20	Optional Inverter System
58213710051	21	
58213710052	22	
58213710053	23	
58213710054	31	
58213710055	31	
58213710056	33	
58213710057	34	
1I1201000	2.5	Inverter Module
Module Mounting Assembly Kits (maximum for 5 module mounting assemblies)		
58213710030	8.4	Module Mounting Assembly Mounting Kits
588705300	See PD588705300	Module Mounting Assembly
58213710033	8.4	Field Expansion Module Mounting Assembly (23” Combo)
58213710034	8.4	Field Expansion Module Mounting Assembly (23” Rect/Solar)
58213710036	7.1	Field Expansion Module Mounting Assembly (19” Rect/solar)
1R482000E3	2.5	Rectifier Module
1S482000E3	2.5	Solar Converter Module
1C48241500	2.3	Converter Module
1C48582000P3	2.3	Converter Module
1M830BNA	2.2	NCU Controller
Rectifier AC Input / Solar Converter DC Input Panel (List 40, 45; maximum for 5 module mounting assemblies) (List 46; maximum for 3 module mounting assemblies)		
58213710040	9.8	Rectifier AC Input / Solar Converter DC Input Panel, 19”
58213710045	7.7	Rectifier AC Input / Solar Converter DC Input Panel, 23”
58213710046	8.0	Rectifier AC Input Panel, 23” System
Hybrid Connection Cabinet (without circuit breakers)		
58213710060	54.2	Hybrid Connection Cabinet
Hybrid Connection Cabinet Circuit Breakers		
See Table 1.	1.8	1-Pole Circuit Breaker
See Table 1.	3.6	2-Pole Circuit Breaker
See Table 1.	5.4	3-Pole Circuit Breaker

© 2026 Vertiv Group Corp. All Rights Reserved.

List Number or Part Number	Net Weight (lbs), each	Description
Solar Connection Cabinet (without circuit breakers)		
58213710061	24.5	Solar Connection Cabinet
Solar Connection Cabinet Circuit Breakers		
See Table 2.	0.6	Circuit Breaker
Distribution Panel, Primary Voltage		
582137100AA	9.5	Distribution Panel
582137100AB	10.0	Distribution Panel
582137100AN	8.1	Distribution Panel
582137100AO	8.6	Distribution Panel
582137100KG	9.0	Distribution Panel
Distribution Panel, Primary Voltage Plus Battery Disconnect		
582137100BA	10.6	Distribution Panel
582137100BB	11.1	Distribution Panel
582137100BC	10.6	Distribution Panel
582137100BD	11.1	Distribution Panel
582137100BN	9.2	Distribution Panel
582137100B0	9.7	Distribution Panel
Distribution Panel, Dual Voltage (includes bus from panel to List 30 kit bus)		
582137100DA	12.0	Distribution Panel
582137100DB	12.0	Distribution Panel
582137100DC	12.0	Distribution Panel
582137100DD	12.0	Distribution Panel
582137100DE	12.0	Distribution Panel
582137100DF	12.0	Distribution Panel
582137100FA	12.0	Distribution Panel
582137100FB	12.0	Distribution Panel
582137100FC	12.0	Distribution Panel
582137100FD	12.0	Distribution Panel
582137100FE	12.0	Distribution Panel
582137100FF	12.0	Distribution Panel
582137100GB	12.0	Distribution Panel
Low Voltage Disconnect		
582137100LB	2.3	Low Voltage Battery Disconnect Option
582137100LL	2.3	Low Voltage Load Disconnect Option
Distribution Elements		
559737	1.5	Kit, 6-Position GMT Fuse Module
549017	1.5	Kit, 6-Position GMT Fuse Module
60147273	1.0	+27 VDC eSure Bullet Converter
10062803	1.0	Kit, +27 VDC GMT Fuse Module
Relay Racks		
559817	51	Relay Rack

© 2026 Vertiv Group Corp. All Rights Reserved.

List Number or Part Number	Net Weight (lbs), each	Description
562353	229	Relay Rack
559818	103	Relay Rack
559820	113	Relay Rack
559821	81	Relay Rack
559822	123	Relay Rack
559824	93	Relay Rack
559823	167	Relay Rack
10009902	201	Relay Rack
Battery Trays		
See “List 93 (23” Battery Tray)” on page 173 and “List 94 (19” Battery Tray)” on page 174.		
Miscellaneous		
559741	0.5	Second Ethernet Port Kit

© 2026 Vertiv Group Corp. All Rights Reserved.

BATTERY MANUFACTURER INFORMATION

Some equipment described in this System Application Guide is designed to accommodate batteries from various manufacturers. The following are referenced in this document.

C&D: C&D Technologies, Inc., Powercom Div., 1400 Union Meeting Road, Blue Bell, PA 19422-0858

Deka®: East Penn Mfg. Co., Inc., Lyon Station, PA 19536-0147

Douglas®: Douglas Battery Mfg. Co., 500 Battery Dr., Winston-Salem, NC 27117-2159

Fiamm: FIAMM T.I, 23880 Industrial Park Drive, Farmington Hills, Detroit, MI 48335

Absolyte® and Marathon™: GNB Industrial Power, a Division of Exide Technologies, Princeton, NJ 08543.

Northstar: NorthStar Battery Co. LLC, 4000 Continental Way, Springfield, MO 65803

PowerSafe Enersys™: EnerSys Inc., Reading, PA, 196212-4145

RELATED DOCUMENTATION

System Installation Instructions:	IM582137100
System User Instructions:	UM582137100
NCU Controller Instructions:	UM1M830BNA
Rectifier Instructions:	UM1R482000E3
Solar Converter Instructions:	UM1S482000E3
Converter Instructions:	UM1C48241500
Converter Instructions:	UM1C48582000P3
Inverter Instructions:	UM1I1201000
Output Converter Upgrade Field Kit:	IM60028039
Module Mounting Assembly Power Data Sheet:	PD588705300
Main Schematic Diagrams:	SD582137100 (System) SD588705300 (Module Mounting Assembly)
Main Wiring Diagrams:	T582137100 (System) T588705300 (Module Mounting Assembly)

© 2026 Vertiv Group Corp. All rights reserved. Vertiv™ and the Vertiv logo are trademarks or registered trademarks of Vertiv Group Corp. All other names and logos referred to are trade names, trademarks or registered trademarks of their respective owners. While every precaution has been taken to ensure accuracy and completeness here, Vertiv Group Corp. assumes no responsibility, and disclaims all liability, for damages resulting from use of this information or for any errors or omissions.