Vertiv™ SmartCabinet™ ID

Quick Installation Guide

1. Product Overview

Vertiv™ SmartCabinet™ ID is an IP54-rated, fully enclosed cabinet, integrated with the air conditioner, Uninterruptible Power Supply (UPS) (optional), Power Management Block (PMB), Power Distribution Unit (PDU) (optional), and emergency fan.

2. Quick Installation

After the product arrives, you can refer to this quick installation guide for operation. For detailed description and installation diagrams, refer to Vertiv™ SmartCabinet™ ID User Manual.

2.1. Unpacking and Lifting the Cabinet

1. Open the butterfly locks on the wooden box, and then remove the wooden panels from the cabinet.
2. On each leveling foot, remove two M8 x 40 bolts (1) that secure each shipping bracket to the pallet. Then remove four shipping brackets (2) from the pallet. See Figure 1.

Figure 1 - Removal of the Shipping Brackets

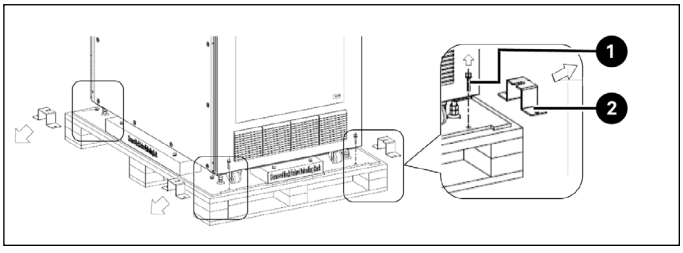

3. Lift the levelling feet by rotating the hex bolt (2) on each foot, so the casters make contact with the pallet. Then tighten the fixing nut (1). See Figure 2.

Figure 2 - Lifting the Levelling Feet

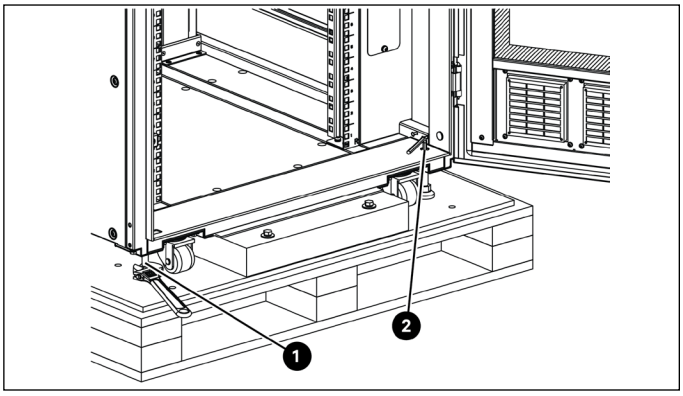

4. Use a crane to lift the cabinet or move the cabinet along the ramps to remove the cabinet from the pallet and place it at the installation site.

- Using a crane to lift the cabinet:

M12 eye bolts (not included) are required to be fastened into the screw holes (1) on the four corners of the cabinet top panel. Tie two hoisting cables (not included) to the eye bolts in diagonal lines (2). Make sure that the angle between two cables is less than or equal to 70 degrees. See Figure 3 (a).

- Moving the cabinet along the ramps:

Remove two M8 x 90 bolts (5) from each wood block and then remove four wood blocks (4) from under the cabinet. Then install the ramps (accesory not included) on the pallet (3). See Figure 3 (b). For details, see Vertiv™ Ramp Quick Installation Guide.

Figure 3 - Lifting and Moving the Cabinet

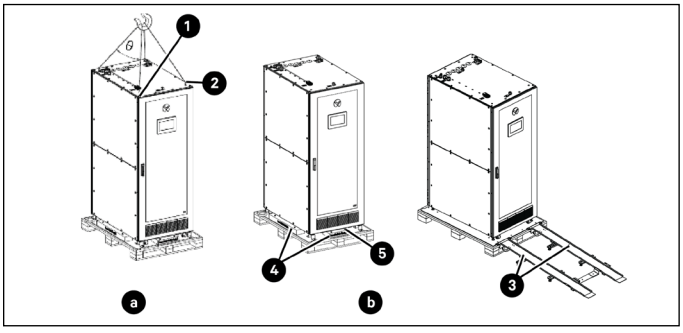

2.2. Unpacking and Lifting the Condensing Unit

The specifications of condensing unit are 3.5kW and 7kW. When lifting the 7kW condensing unit, remove the brackets (2) from the pallet. On the top panel of the condensing unit, remove six pan head screws (1) and install the two brackets (2) on the top panel with these screws. Tie two hoisting cables to the brackets. Make sure that the angle between two cables is less than or equal to 70 degrees. See Figure 4.

Figure 4 - Unpacking and Lifting the Condesing Unit

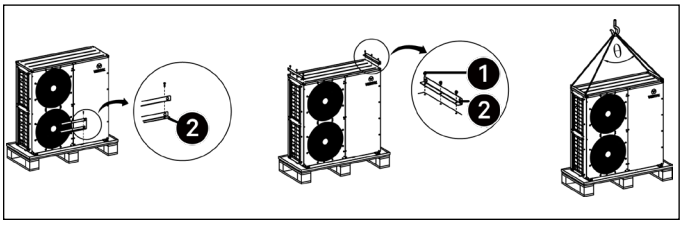

Proprietary and Confidential ©2022 Vertiv Group Corp.

2.3. Installing the UPS (Optional)

1. Adjust the length of the rail (2) based on the distance between the front and rear vertical posts. Fix each rail on the bottom two rack units with four M5 x 12 Phillips head screws (1). See Figure 5.

Figure 5 - Installation of the Rail

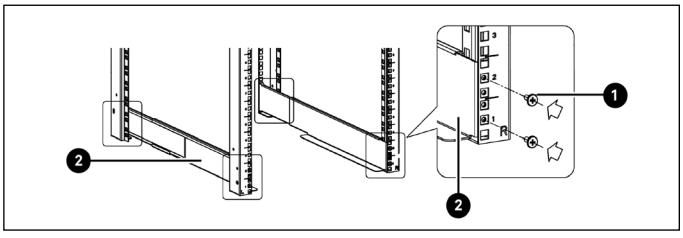

2. Install two hangers (2) on the UPS by fixing each hanger with four M4 x 8 Phillips head screws (1). Insert the UPS between the vertical posts, and fix its hangers on the rails with two M6 x 20 Torx screws (3) and two M5 x 16 Torx screws (4). See

Figure 6 - Installation of the UPS

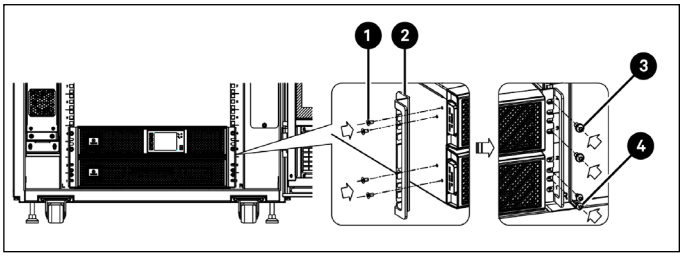

2.4. Installing the PDU (Optional)

Install the PDU on the rear mounting rail. If two PDUs are to be installed, install one on the left mounting rail, and the other on the right mounting rail.

1. On the mounting rail, pass the two tie wrap through the cut out (1). One is near to the top and other is near to the bottom. See Figure 7.

Figure 7 - Installation of the PDU on the Rear Mounting Rail

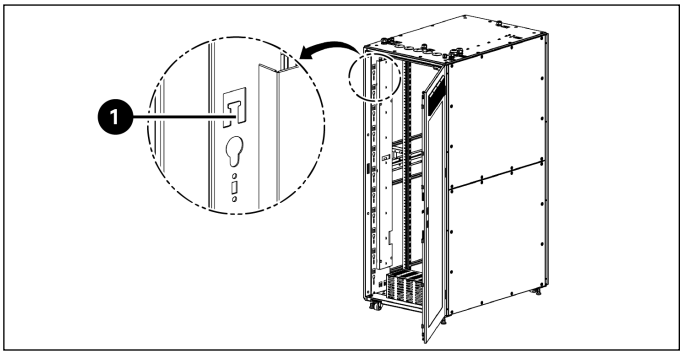

2. Install the PDU along the mounting rail, in the direction that the end with socket being placed near the bottom of the mounting rail. Slide both mounting pegs (1) into the slots (2) on the rail and bind the two tie wraps. See Figure 8.

Figure 8 - Installation of the PDU

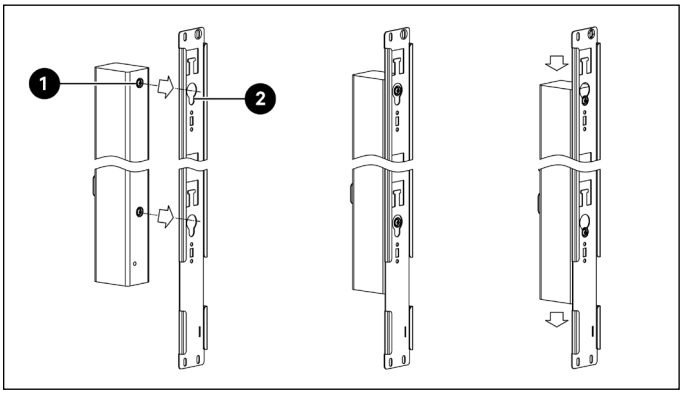

2.5. Installing the Condensing Unit

There are two ways to install the condensing unit.

- The 3.5kW standard condensing unit can be installed on the top of the cabinet and outdoors.
- The 7kW condensing unit can only be installed outdoors.

NOTE: *The air conditioner has been pre-charged with refrigerant and lubricating oil in factory. When the gas pipe is longer than 5 m (16.4 ft), the liquid pipe is longer than 10 m (32.8 ft). You need to charge extra refrigerant and lubricating oil to the air conditioner, please refer to Vertiv™ SmartCabinet™ ID User Manual.*

2.5.1. Installing the Condensing Unit on the Top of the Cabinet

NOTE: *The condensing unit must be installed vertically, with its connectors on the same side of the cabinet rear door.*

1. Remove the four sealing plugs (1) from the M8 threaded inserts (2) on cabinet top panel. See Figure 9.
2. Install four vibration damping mounts (3) in the M8 threaded inserts and fasten the mounts. Place the condensing unit on the top panel, aligning base stand brackets with vibration damping mounts. Install the flat washer (6), spring washer (5) and Torx screw (4) on each vibration damping mount in turn. See Figure 9.

Proprietary and Confidential ©2022 Vertiv Group Corp.

Figure 9 - Installation of the Condensing Unit

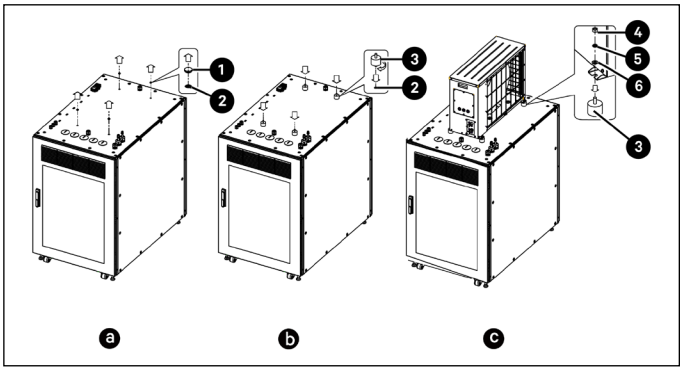

3. Connect one end of the ø 9.52 mm liquid pipe (3) and ø 12.7 mm gas pipe (4) to the liquid pipe connector (5) and gas pipe connector (6) on the cabinet top panel, and the other end to the liquid pipe connector (1) and gas pipe connector (2) on the condensing unit. See Figure 10.

2.5.2. Installing the Condensing Unit in an Outdoor

Figure 10 - Connection of Gas Pipe and Liquid Pipe Between Cabinet and Condensing Unit

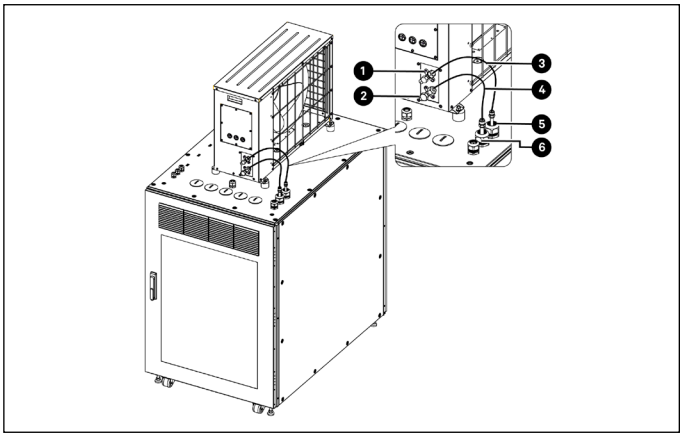

Environment

1. Confirm whether the air deflector needs to be installed on the condensing unit according to the outdoor temperature. For the installation details of the air deflector, refer to section of the Vertiv™ SmartCabinet™ ID User Manual.
2. Fix the condensing unit to the base with expansion bolts. Refer to step 3 in section 2.5.1 to complete the connection of the liquid pipe and gas pipe to the pipe connector.

2.6. Routing the Condensate Drainage Pipe

1. The condensate water is drained by the gravity drainage pipe by default. Remove the tie wrap that fix the pipe to the leveling foot and connect the pipe to the water drainage system.
2. If pump drainage is required, block the gravity drainage pipe. Fold the gravity condensate drain line back on itself a few times to block the drain and secure it with the provided tie wraps.

Cut the tie wrap (1) that binds the pump drainage pipe (2). Route the pipe out of the cabinet from the outlet on the bottom panel. Connect the pipe to the water drainage system.

Figure 11 - Condensate Drainage Routing

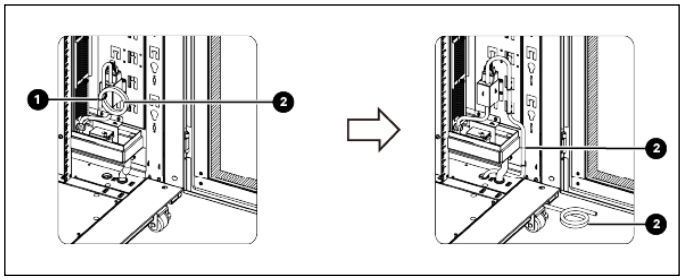

2.7. Connecting Cables

NOTE: *It is recommended to install an external circuit breaker between the mains electricity and the cabinet. For cable specifications, refer to section Cable Specifications of the Vertiv™ SmartCabinet™ ID User Manual.*

Figure 12 - Cable Access Location on Top Panel

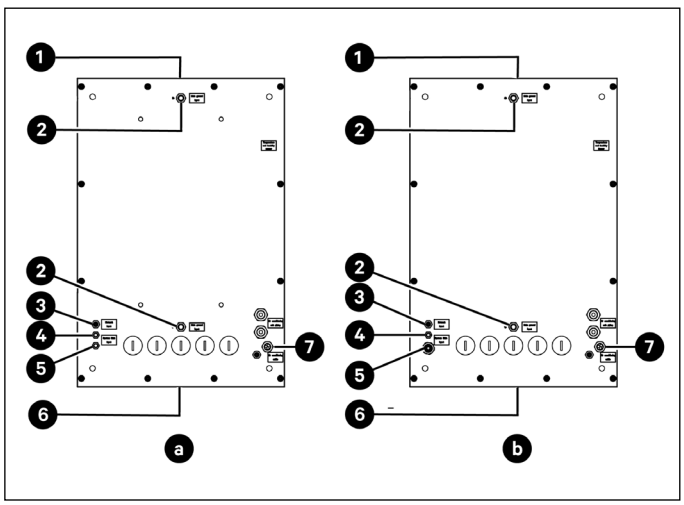

Item	Description	Item	Description
a	VS3354, VS3350, VS3354I, VS3350I	4	System main input (for PMB)
b	VS3750, VS3750I	5	System main input (for UPS)
1	Front door	6	Rear door
2	Main ground input	7	Air conditioning cable
3	Network input		

2.7.1. Routing Cable through Cable Gland

There are two types of cable gland on the top of the cabinet for routing the cables.

- Main Ground Input, System Main Input, and Network Input Cable Gland

Remove the cap (1) from the cable gland (2) by rotating the cap. Insert the cable (3) into the cap and cable gland. Reinstall the cap on the cable gland. See Figure 13.

Figure 13 - Routing Cable through Cable Gland

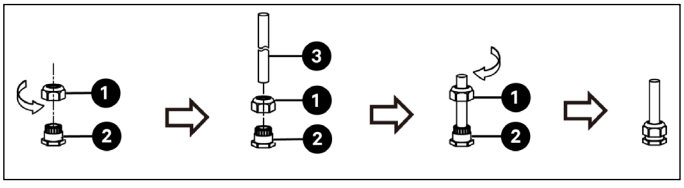

- Air Conditioning Cable Gland

For the air conditioning cable, there are three cables that need to pass through one cable gland, which are the condenser fan power supply cable, condensing unit power supply cable and ethernet cable.

Remove the cover (1), pull the pass-through rubber plug (2) from the cable gland (3), and cut an opening in the outer wall of each hole of the plug. First insert the cable (4) into the cap, then insert each cable into the hole of the plug. Finally push the cable and the pass-through rubber plug into the cable gland and reinstall the cap. See Figure 14.

Figure 14 - Routing Air Conditioner Cables through Cable Gland

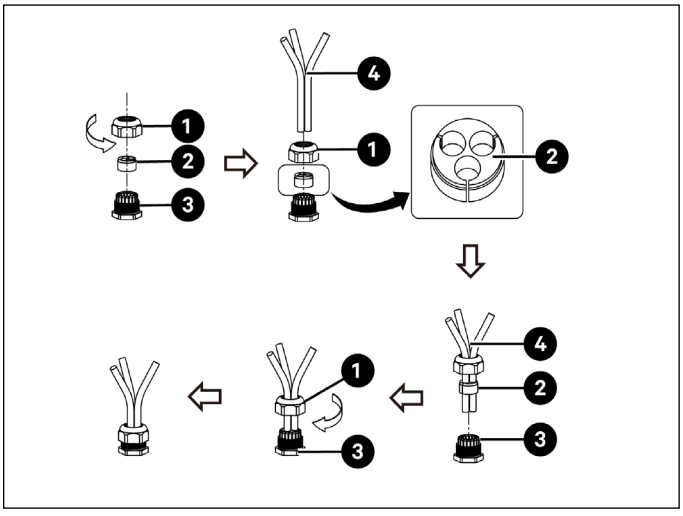

2.7.2. Connecting Main Power Supply for the Cabinet

There are two ways for connecting the main power supply:

Power connection A: Main electricity is connected to UPS. UPS provides power to PMB and IT equipment.

Power connection B: Main electricity is connected to UPS and PMB. UPS provides power to IT equipment.

Figure 15 - Power Connection A and B

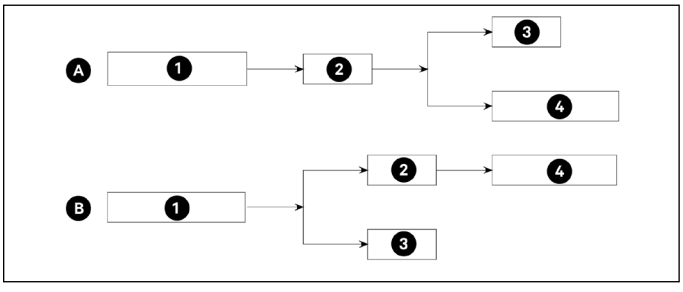

Item	Description	Item	Description
1	Mains electricity	3	PMB
2	UPS	4	IT equipment

Removing the horizontal cable management panel before connecting the power cables. Remove four M6 x 16 Torx screws (1) from the horizontal cable management panel (2) and remove the panel from the vertical cable management panel (3). See Figure 16.

Proprietary and Confidential ©2022 Vertiv Group Corp.

Figure 16 - Removal of Horizontal Cable Management Panel

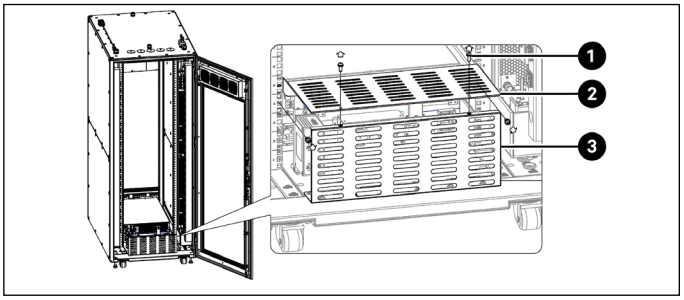

Power Connection A for VS3354I, VS3350I and VS3750I (See Figure 17, 18 and 19):

1. Connect the main power supply cable to UPS. Prepare a power cable (1) and route the cable through the cable gland (2) (system main input for UPS). Connect the cable to the UPS input terminals (7).
2. Connect the power cable between UPS and PMB. Remove the PMB terminal block cover (6). Connect the cord end of the W34 power cable (4) to the UPS output terminals (3) and connect the OT end of the cable to the PMB main input terminals (5). Reinstall the PMB terminal block cover.

Figure 17 - Power Connections

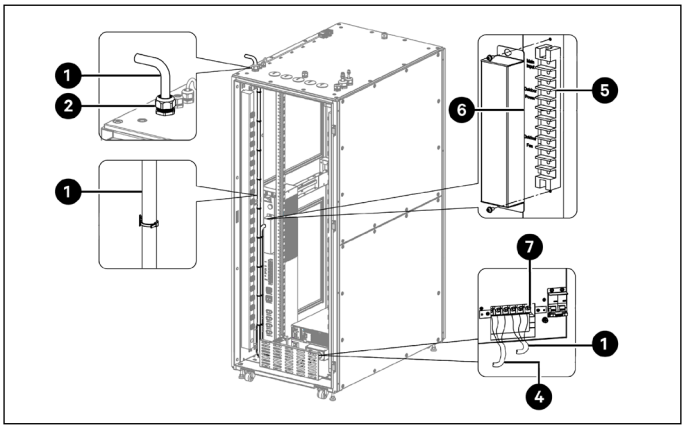

Figure 18 - UPS and PMB Power Terminals (6kVA)

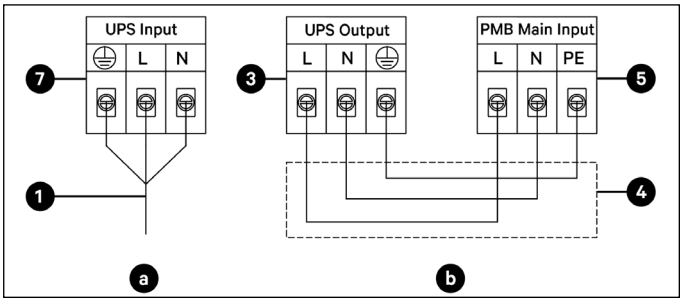

Figure 19 - UPS and PMB Power Terminals (10kVA)

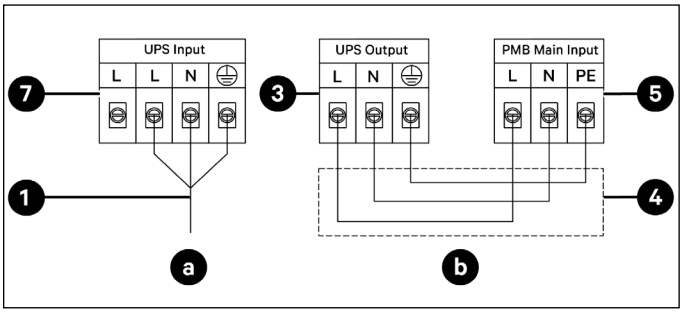

Power Connection A for VS3354 and VS3350 with 6kVA UPS (See Figure 20):

1. Connect the main power supply cable to UPS. Prepare a power cable (1). Connect the cable's L14-30R connector (5) to the L14-30P UPS power input connector (3). Route the other end of the cable out of the cabinet through cable gland (2) (system main input for UPS) and connect it to the mains electricity.
2. Connect the power cable between UPS and PMB. Connect the L6-20P PMB power input connector (4) to the L6-20R UPS power output connector (6).

Figure 20 - Main Power Supply for the Cabinet Connection

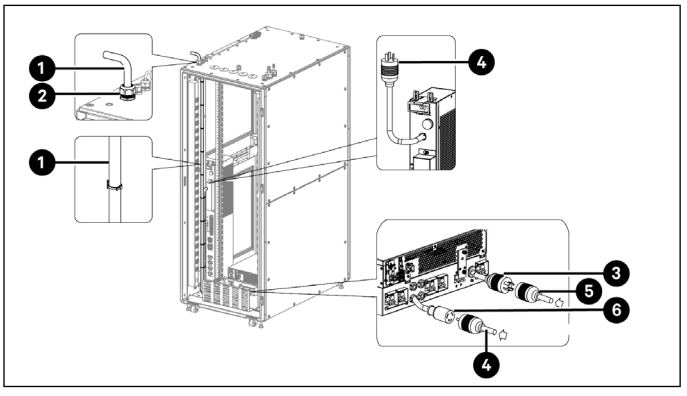

Power Connection A for VS3750 with 10kVA UPS (See Figure 21):

1. Connect the main power supply cable to UPS. Prepare a power cable (1) and route the cable through the cable gland (2) (system main input for UPS). Connect the cable to the UPS Input terminals (5).
2. Connect the power cable between UPS and PMB. Connect the L6-30R UPS power output connector (3) to the L6-30P PMB power input connector (4).

Figure 21 - UPS and PMB Power Terminals (10kVA)

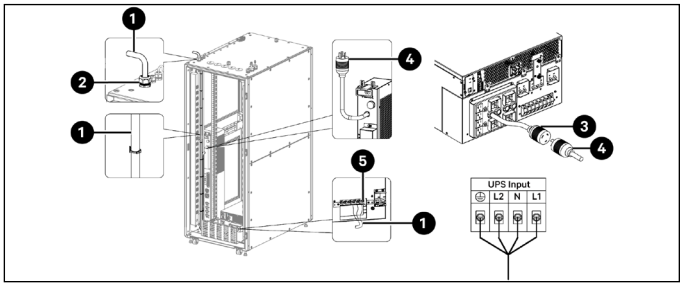

Power Connection B for VS3354I, VS3350I and VS3750I (See Figure 22, 23 and 24):

1. Connect the main power supply cable to UPS. Prepare a power cable (2) and route the cable through the cable gland (3) (system main input for UPS). Connect the cable to the UPS input terminals (6).
2. Connect the main power supply cable to PMB. Remove the PMB terminal block cover (5).

Figure 22 - Power Connection B for VS3354 and VS3350 with 6 kVA UPS

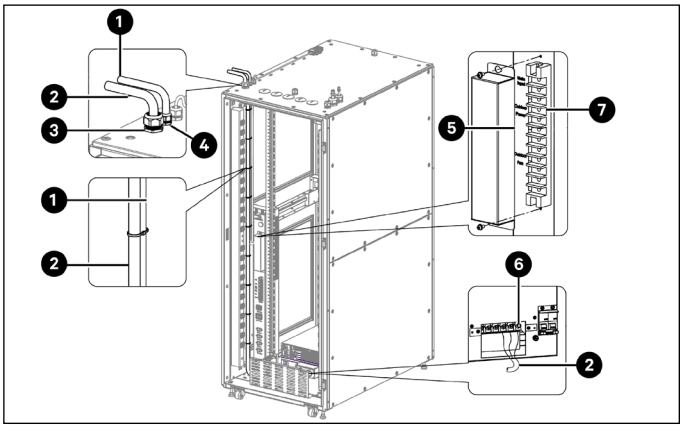

Figure 23 - UPS and PMB Power Terminals (6kVA)

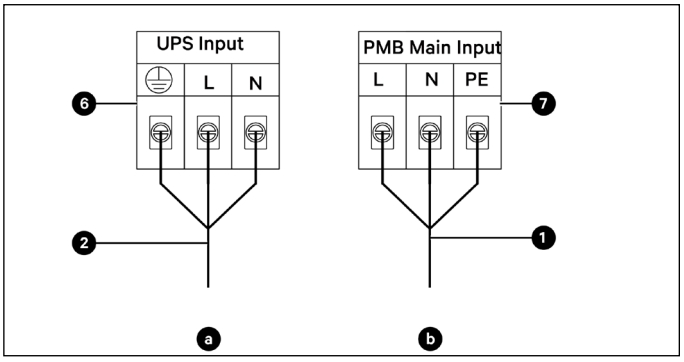

Prepare a power cable (1) and route the cable through the cable gland (4) (system main input for PMB). Connect the cable to the PMB main input terminals (7). Reinstall the PMB terminal block cover.

Figure 24 - UPS and PMB Power Terminals (10kVA)

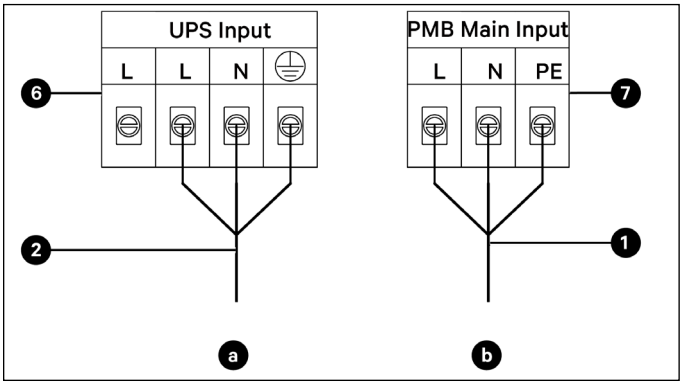

Power Connection B for VS3354 and VS3350 with 6kVA UPS (See Figure 25):

1. Connect the main power supply cable to UPS. Prepare a power cable (2) and connect the cable's L14-30R connector (5) to the L14-30P UPS power input connector (8). Route the other end of the cable out of the cabinet through the cable gland (3) (system main input for UPS) and connect it to the mains electricity.
2. Connect the main power supply cable to PMB. Prepare a power cable (1). Connect the cable's L6-20R connector (7) to the L6-20P PMB power input connector (6). Route the other end of the cable out of the cabinet through the cable gland (4) (system main input for PMB) and connect it to the mains electricity.

Figure 25 - Connecting Power Cables and Ethernet Cable

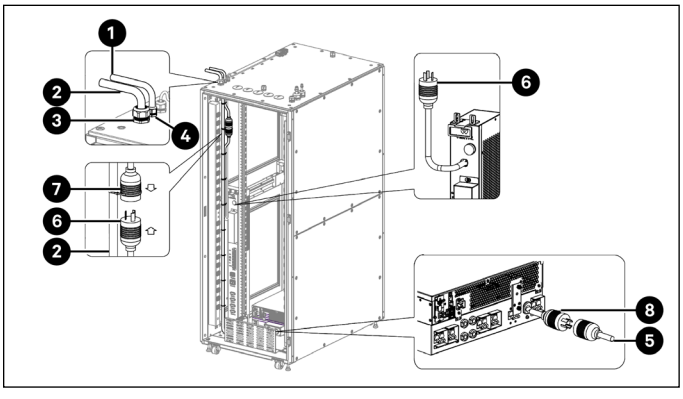

Proprietary and Confidential ©2022 Vertiv Group Corp.

Power Connection B for VS3750 with 10kVA UPS (See Figure 26):

1. Connect the main power supply cable to UPS. Prepare a power cable (2) and route the cable through the cable gland (3) (system main input for UPS). Connect the cable to the UPS input terminals (5).
2. Connect the main power supply cable to PMB. Prepare a power cable (1) and connect the cable's L6-30R connector (7) to the L6-30P PMB power input connector (6). Route the other end of the cable out of the cabinet through the cable gland (4) (system main input for PMB) and connect it to the mains electricity.

Figure 26 - Connecting Power Cables and Ethernet Cable

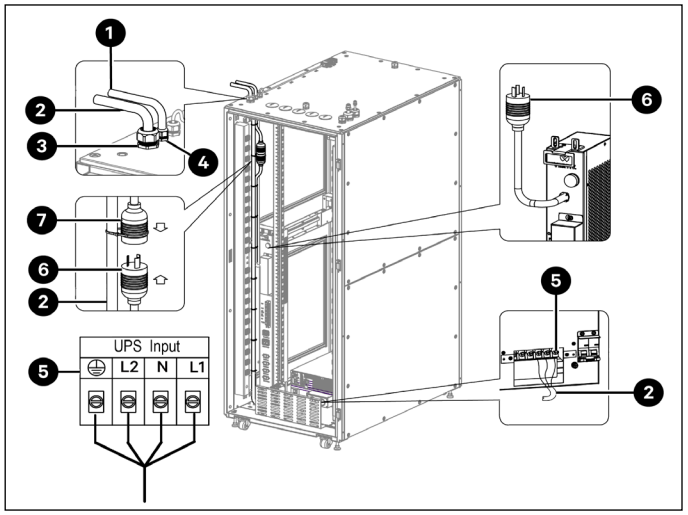

2.7.3. Connecting Power Cables and Ethernet Cable for Evaporator and Condensing Unit

1. Prepare two power cables for connecting PMB and condensing unit. Prepare an ethernet cable for connecting evaporator and condensing unit.
2. Remove the PMB's terminal block cover (1), connect one end of the two cables to the outdoor fan terminal and outdoor power terminal on the PMB terminal block (4) respectively. Connect one end of the Ethernet cable to the RS485-3 port (2) on the evaporator's electrical panel. Route the two power cables and the ethernet cable out of the cabinet through the cable gland (3) (air conditioning cable). See Figure 27.
3. Remove the electrical box cover (6) from the condensing unit. Remove the three wire fixing clamps (5) from the panel for later use. Route the outdoor fan cable through the grommet (1) on electrical box cover. Route the outdoor power cable through the grommet (2) and the ethernet cable through the grommet (3). Then route the three cables through the grommets (4) on panel bottom. See Figure 28.
4. Connect the outdoor fan cable to the condenser fan power input terminals on the condensing unit's electrical panel and connect the outdoor power cable to the power input terminals. Connect the ethernet cable to the compressor communication port.

Figure 27 - Connecting Power Cables and Ethernet Cable

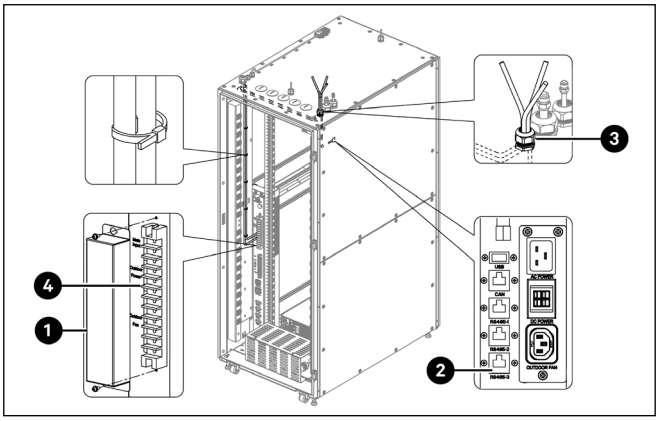

Figure 28 - Connecting Power Cables and Ethernet Cable

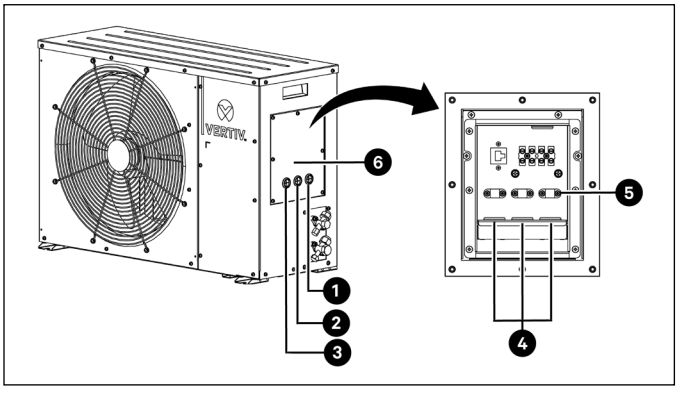

Figure 29 - Power Cable and Ethernet Cable Connection for PMB, Condensing Unit, and Evaporator (UL Models)

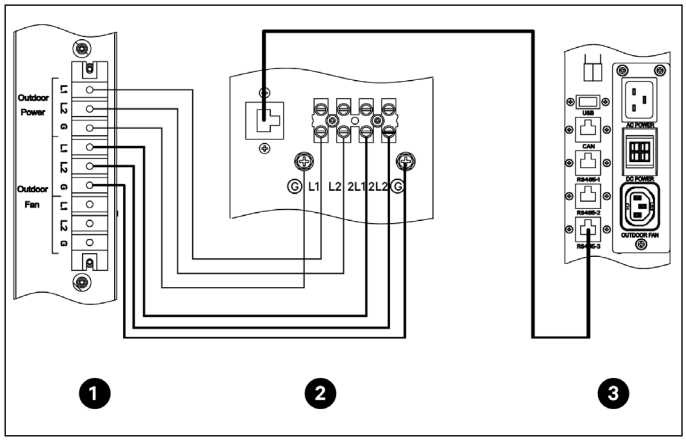

Item	Description
1	PMB (Cabinet VS3354, VS3350, and VS3750)
2	Condensing unit (ZCC03U, ZCC07U, ZCL03U, and ZCL07U)
3	Evaporator (ZRC03U and ZRC07U)

Figure 30 - Power Cable and Ethernet Cable Connection for PMB, Condensing Unit, and Evaporator (CE Models)

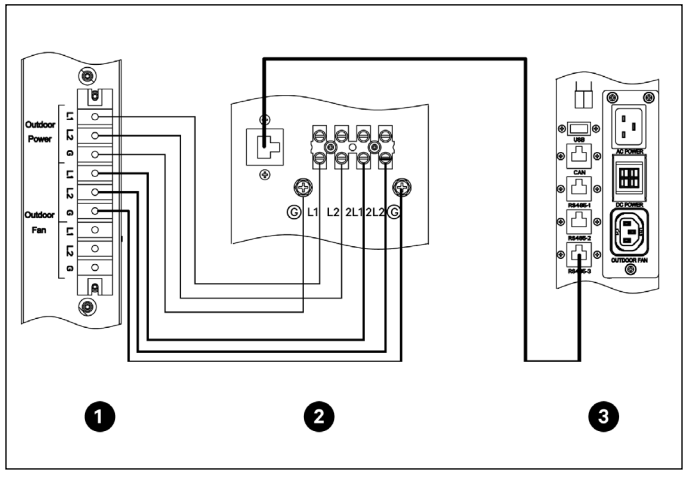

Item	Description
1	PMB (Cabinet VS3354I, VS3350I, and VS3750I)
2	Condensing unit (ZCC03C, ZCC07C, ZCL03C, and ZCL07C)
3	Evaporator (ZRC03C and ZRC07C)

2.7.4. Connecting Ethernet Cables for UPS (Optional)

The W46 cable (2) has been connected to the switch in factory. Plug the other end of the W46 cable to the active link port (1) on UPS. See Figure 31.

Figure 31 - Connecting Ethernet Cables for UPS

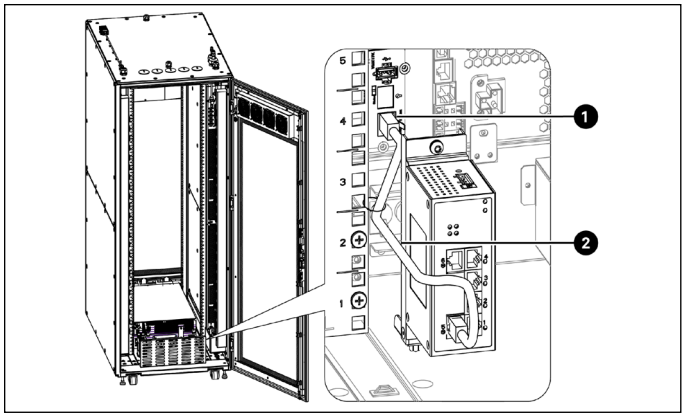

2.7.5. Connecting Power Cables and Ethernet Cables for PDUs

Connecting Ethernet Cables for PDUs (Optional):

The W51 and W52 Ethernet cables have been routed inside the cabinet in factory. One end of the W51 cable (3) has been connected to the switch (5). Connect the other end to PDU (1). Connect the W52 (2) cable between PDU (1) and PDU (4). See Figure 32.

Figure 32 - Connecting Ethernet Cables for PDUs

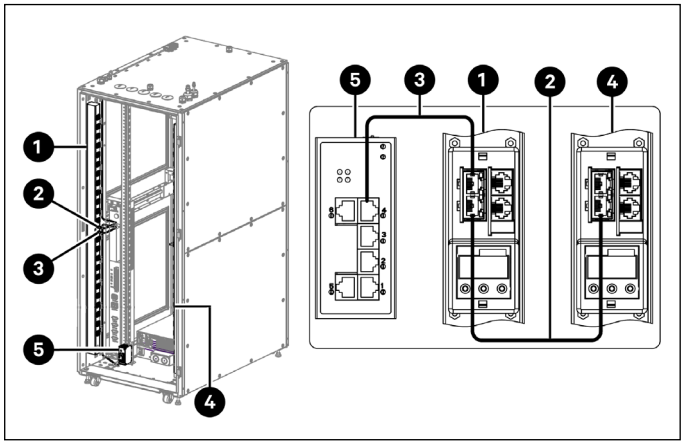

Connecting Power Cables for PDUs:

Prepare power cables and connect them between PDUs and UPS.

Proprietary and Confidential ©2022 Vertiv Group Corp.

Figure 33 - Connecting Power Cables for PDUs (VS3354I and VS3350I Cabinets)

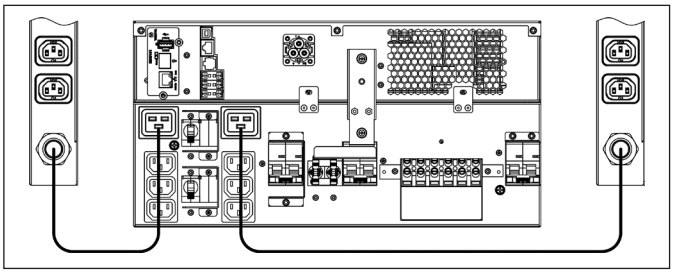

Figure 34 - Connecting Power Cables for PDUs (VS3750I Cabinet)

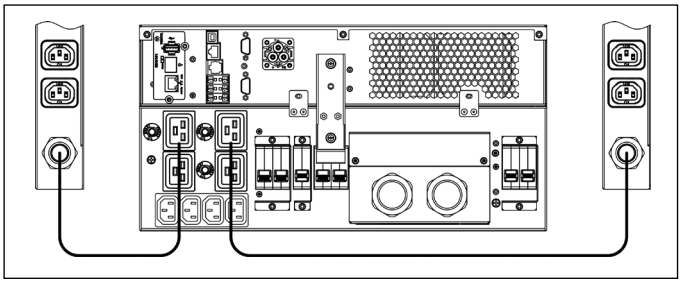

Figure 35 - Connecting Power Cables for PDUs (VS3354 and VS3350 Cabinets)

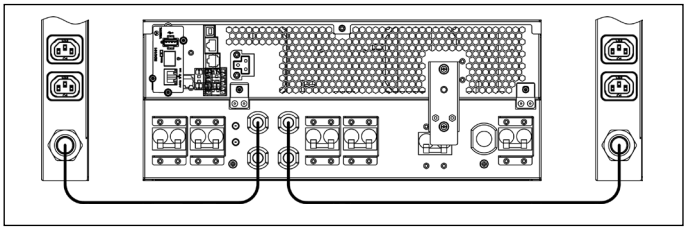

Figure 36 - Connecting Power Cables for PDUs (VS3750 Cabinet)

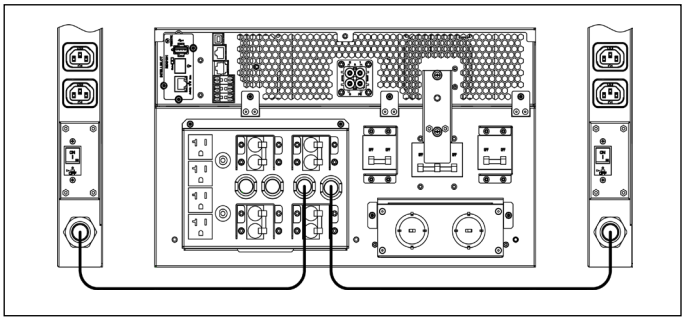

2.7.6. Connecting Grounding Cables

Prepare the grounding cable. There are four grounding points: two at the bottom of the cabinet and two at the top. Connect the grounding cable (1) to the grounding point (3) with M8 screw (2). Connect the other end of the cable to the copper grounding bar in the equipment room. See Figure 37.

Figure 37 - Connecting Grounding Cables

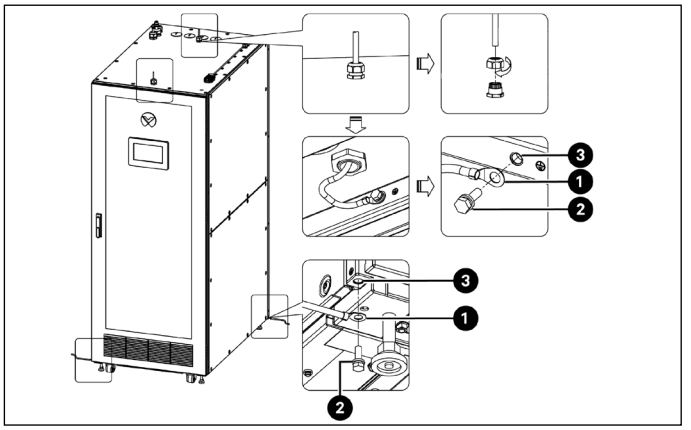

2.7.7. Connecting Ethernet Cable for Computer

1. Prepare an ethernet cable and route the cable through the cable gland (network input) on top panel into the cabinet.
2. Connect one end of the cable to the switch in the cabinet and connect the other end to the computer.

3. Commissioning

3.1. Inspection

Before using the Vertiv™ SmartCabinet™ ID, check that:

- The voltage and frequency of the mains electricity match the requirements of the cabinet.
- All power supply cables are correctly connected and there is no short circuit.
- All Ethernet cables are correctly connected.
- Line set between the evaporator and the condensing unit is correctly connected. All valves in the line set are at their required open or closed position.
- The condensate water drainage pipe is correctly connected and there is no leakage.

3.2. Powering on the Cabinet

1. Close the external circuit breaker.
2. Close the input circuit breaker on UPS. The LCD screen on the UPS initializes.
3. Close the output circuit breaker on UPS.
4. Close the main input circuit breaker on PMB. The indicator of the PMB is illuminated.
5. Close the A/C Indoor and A/C Outdoor circuit breakers on PMB.
6. Wait till the 9-inch LCD screen on the cabinet front door initializes. Press your preferred language and press *Next Step*.

Proprietary and Confidential ©2022 Vertiv Group Corp.

Figure 38 - 9 inch LCD screen

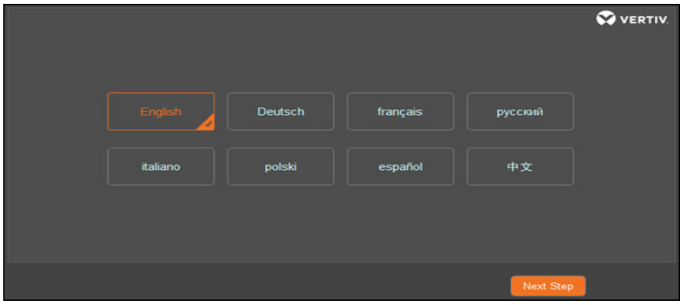

7. Configure Cabinet Locks, Power Connection Method, PDU Type, PDU Qty, UPS Type, and Emergency Fan, and press Save. A password input dialog box is displayed. Input *1234* (default password) and press *Enter*. A message is displayed indicating that the system will reboot in 180 seconds.
8. After the system reboots, the home page is displayed. Check that the system status is normal.

Figure 39 - Configuration Page

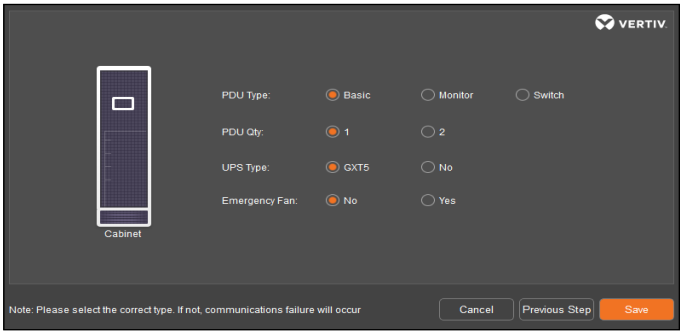

9. In the menu bar, press Thermal and Settings. Input *1234* (default password) and press *Enter*. Switch on the AC On/Off button to power on the air conditioner. In the displayed "Turn

Figure 40 - Home Page



10. Power on IT equipment.

Figure 41 - Power ON Screen

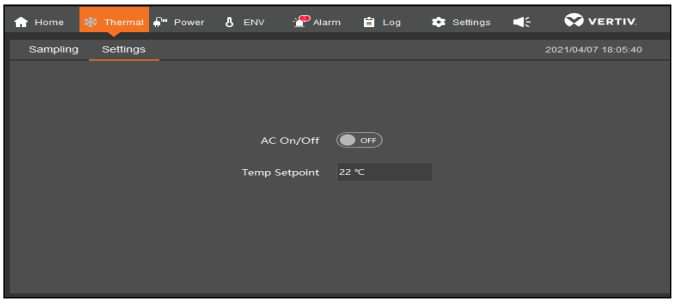

3.3. Powering Off the Cabinet

1. In the home page of the LCD screen, press *Thermal* > *Settings*. Input *1234* (default password) and press *Enter*. Switch off the AC On/Off button to power off the air conditioner.
2. After the air conditioner stops providing cool air, open the A/C indoor and A/C outdoor circuit breakers on PMB.
3. Open the Main Input circuit breaker on PMB.
4. Press and hold the power on/off button for two seconds on UPS LCD, select *Yes*, and then press *Enter* to power off the UPS.
5. Open the input circuit breaker and output circuit breaker on UPS.
6. Make sure that all devices have been powered off, and then close the front and rear cabinet doors.

3.4. Configuring IP Addresses and Web UI

The IP addresses of the LCD, UPS, and PDUs need to be configured, so that these IP addresses are in the same network segment. In addition, in order to use a computer to monitor and manage the cabinet through the web UI, configure the Web UI. See to section 7 and section 8 of the Vertiv™ SmartCabinet™ ID User Manual for detailed configuration steps.

Figure 42 - Configuring IP Addresses and Web UI

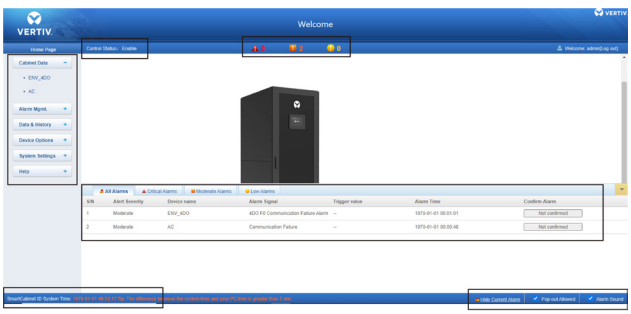

To contact Vertiv Technical Support: visit www.Vertiv.com

©2023 Vertiv Group Corp. All rights reserved. Vertiv™ and the Vertiv logo are trademarks or registered trademarks of Vertiv Group Corp. All other names and logos referred to are trade names, trademarks or registered trademarks of their respective owners. While every precaution has been taken to ensure accuracy and completeness here, Vertiv Group Corp. assumes no responsibility, and disclaims all liability, for damages resulting from use of this information or for any errors or omissions. Specifications, rebates and other promotional offers are subject to change at Vertiv's sole discretion upon notice.