Vertiv™ CoolPhase Flex R-454B Installer/User Guide

Installer/User Guide

The information contained in this document is subject to change without notice and may not be suitable for all applications. While every precaution has been taken to ensure the accuracy and completeness of this document, Vertiv assumes no responsibility and disclaims all liability for damages resulting from use of this information or for any errors or omissions.

Vertiv recommends installing a monitored fluid detection system that is wired to activate the automatic closure of field-installed coolant fluid supply and return shut off valves, where applicable, to reduce the amount of coolant fluid leakage and consequential equipment and building damage. Refer to local regulations and building codes relating to the application, installation, and operation of this product. The consulting engineer, installer, and/or end user is responsible for compliance with all applicable laws and regulations relating to the application, installation, and operation of this product.

The products covered by this instruction manual are manufactured and/or sold by Vertiv. This document is the property of Vertiv and contains confidential and proprietary information owned by Vertiv. Any copying, use, or disclosure of it without the written permission of Vertiv is strictly prohibited.

Names of companies and products are trademarks or registered trademarks of the respective companies. Any questions regarding usage of trademark names should be

Technical Support Site

If you encounter any installation or operational issues with your product, check the pertinent section of this manual to see if the issue can be resolved by following outlined procedures.

Visit https://www.vertiv.com/en-us/support/ for additional assistance.

TABLE OF CONTENTS

1 Important Safety Instructions **1**

2 Nomenclature and Components **7**

2.1 Vertiv™ CoolPhase Flex Model Number Nomenclature 7

2.2 Component Location 10

2.3 Airflow Schematic 10

2.3.1 Liquid Cooling Minimum Load 10

3 Vertiv™ EconoPhase Pumped Refrigerant Economizer with a Vertiv™ CoolPhase Flex System **11**

3.1 Overview of Operating Modes 12

3.2 Vertiv™ EconoPhase Operation 16

3.2.1 Vertiv™ EconoPhase Control 17

3.2.2 Pump Start-up Routine 19

3.2.3 Switch from Compressor Operation to Pump Operation 19

3.2.4 Switch from Pump Operation to Compressor Operation 19

4 Pre-installation Preparation and Guidelines **21**

4.1 Storage before Installation 21

4.2 Planning Dimensions 22

4.3 Connections and System Setup 22

4.3.1 Electrical Connections 22

4.3.2 Evaporator Drip Pan Connection 22

4.4 Operating Conditions 24

4.4.1 Cooling 24

4.5 Unit Weights 24

4.6 A2L Refrigerant Effective Dispersal Volume Calculation 25

4.6.1 How to Determine the Effective Dispersal Volume of an ITE Area 25

5 Equipment Inspection and Handling **27**

5.1 Rigging Instructions 27

5.2 Rigging to Lift the Unit 28

6 Refrigerant Piping and Charging **29**

6.1 Refrigerant Charge Requirements for Air Cooled Systems 30

6.2 Additional Oil Requirements for Scroll and Digital Scroll Compressors 31

6.2.1 Verifying Additional Oil Charge 32

6.3 Piping Connection Sizes 32

6.4 Piping Connection Locations 33

7 Secondary Fluid Circuit Requirements **35**

7.1 Fluid Requirements 35

7.2 Secondary Fluid Loop Piping Guidelines 35

7.2.1 Flanged Connections 37

7.2.2 Pressure Drop for Liquid Cooling Loop 38

7.2.3 Fluid Volume for Unit and Connection Piping 39

7.2.4 Field Piping Connection Volumes 39
7.2.5 Air Bleeders 39
7.2.6 Secondary Fluid Flow Considerations 40
7.3 Fluid Quality Requirements 40
7.4 Filling Secondary Fluid Circuit 41
7.4.1 Leak Check before Commission and Operation 42
8 Electrical Field Connections 43
9 Checklist for Completed Installation 49
9.1 Moving and Placing Equipment 49
9.2 Electrical Installation Checks 49
9.3 Other Installation Checks 49
9.4 BMS and Sensor Installation Checks 50
9.5 Vertiv™ Liebert® APM2 UPS 50
9.6 Refrigerant Leak Mitigation 50
10 Initial Start-up Checks and Commissioning Procedure for Warranty Inspection 51
10.1 Converting the Cooling Operation: Air to Liquid/Liquid to Air 52
10.1.1 Refrigerant Migration Control 52
10.1.2 Wiring and Software 53
10.1.3 Additional Setup and Install 54
10.1.4 Charge Adjustment 56
11 Maintenance 57
11.1 Service Access for Unit Maintenance 58
11.2 Filters 60
11.2.1 Replacing the Air Filters 60
11.2.2 Cleaning the Water Filters 61
11.3 Evaporator Fan Maintenance 63
11.3.1 Fan Assembly Troubleshooting 63
11.3.2 Fan Assembly Maintenance 64
11.3.3 Blower Motor Lubrication 64
11.3.4 Removing Fan Assembly 64
11.4 Electronic Expansion Valve (EEV) Maintenance 65
11.5 Fluid and Piping Maintenance 65
11.6 Flow Sensor 66
11.7 Compressor Maintenance 68
11.7.1 Compressor Oil 68
11.7.2 Replacement Compressors 68
11.7.3 Compressor Electrical Failure (Motor Burnout) 68
11.7.4 Unloading Solenoid(s) on a Digital Scroll Compressor 68
11.7.5 Compressor Failure 69
11.7.6 Evacuation, Leak Testing, and Charging 70
11.8 General Condenser Maintenance 72
11.9 Condenser Cleaning 72

11.9.1 When to Clean the Condenser Coil 72
11.9.2 What to Use to Clean the Condenser Coil 72
11.9.3 Cleaning the Condenser Coil 73
11.9.4 Cleaning the Condenser Fan 73
11.10 Replacing the Condenser Fan 73
11.10.1 P-C Menu Programming 75
11.10.2 Manual Fan Addressing (No P-C Menu) 77
11.10.3 Verifying the Fan Address 78
11.11 Replacing the Premium Efficiency Control Board 80
11.11.1 Preparing to Replace the Board 80
11.11.2 Installing the Replacement Board 81
11.12 Units with a Refrigeration Detection System 83
11.13 Qualification of Workers 83
11.14 Information on Servicing 83
12 Preventive Maintenance Checklist 89
Appendices 93
Appendix A: Technical Support and Contacts 93
Appendix B: DH400 Motor Maintenance 95
Appendix C: Submittal Drawings 99

1 Important Safety Instructions

SAVE THESE INSTRUCTIONS

This manual contains important safety instructions that should be followed during the installation and maintenance of the Vertiv™ CoolPhase Flex. Read this manual thoroughly before attempting to install or operate this unit.

Only qualified personnel should move, install or service this equipment.

Adhere to all warnings, cautions, notices and installation, operating and safety instructions on the unit and in this manual. Follow all installation, operation and maintenance instructions and all applicable national and local building, electrical and plumbing codes.

WARNING! Arc flash and electric shock hazard. Open all local and remote electric power-supply disconnect switches, verify with a voltmeter that power is Off and wear appropriate, OSHA-approved personal protective equipment (PPE) per NFPA 70E before working within the electric control enclosure. Failure to comply can cause serious injury or death. Customer must provide earth ground to unit, per NEC, CEC and local codes, as applicable. Before proceeding with installation, read all instructions, verify that all the parts are included and check the nameplate to be sure the voltage matches available utility power. The Vertiv™ Liebert® iCOM™ controller does not isolate power from the unit, even in the "Unit Off" mode. Some internal components require and receive power even during the "Unit Off" mode of the Vertiv Liebert iCOM controller. The factory-supplied disconnect switch is inside the unit. The line side of this switch contains live high voltage. The only way to ensure that there is NO voltage inside the unit is to install and open a remote disconnect switch. Refer to unit electrical schematic. Follow all local codes.

WARNING! Risk of electric shock. Can cause equipment damage, injury or death. Open all local and remote electric power supply disconnect switches and verify with a voltmeter that power is off before working within any electric connection enclosures. Service and maintenance work must be performed only by properly trained and qualified personnel and in accordance with applicable regulations and manufacturers' specifications. Opening or removing the covers to any equipment may expose personnel to lethal voltages within the unit even when it is apparently not operating and the input wiring is disconnected from the electrical source.

WARNING! Risk of electric shock. Can cause serious injury or death. Open all local and remote electric power supply disconnect switches and verify with a voltmeter that power is off before working within the fan motor electric connection enclosures. Fan motor controls can maintain an electric charge for 10 minutes after power is disconnected. Wait 10 minutes after power is verified as off before working within the fan electric control/connection enclosures. Use only fully-trained and qualified HVAC technicians to perform maintenance on the fans.

© 2026 Vertiv Group Corp.

All Rights Reserved.

WARNING! Risk of electric shock. Can cause serious injury or death. The Vertiv Liebert iCOM microprocessor does not isolate power from the unit, even in the "Unit Off" mode. Some internal components require and receive power even during the "unit off" mode of the Vertiv Liebert iCOM control. Open all local and remote electric power disconnect switches and verify with a voltmeter that power is Off before working on any component of the system.

WARNING! Risk of improper humidifier canister maintenance. Can cause serious injury or death. Building and equipment damage may also result. Can cause fire suppression and alarm system activation, resulting in building evacuation and mobilization of emergency fire and rescue services. Using a humidifier canister that has reached the end of its service life can be extremely hazardous. If the canister cannot be replaced immediately at the end of life condition, turn off the power and water supply to the humidifier and remove the canister until a replacement canister can be installed. Do not ignore humidifier problem alarms. Resetting the humidifier without addressing cause may result in fire or damage from leaking water. See Steam Generating Humidifier Status Lights: Causes and Corrective Actions for alarm corrective actions.

WARNING! Risk of over-pressurization of the refrigeration system. Can cause explosive discharge of high-pressure refrigerant, loss of refrigerant, environmental pollution, equipment damage, injury, or death. This unit contains fluids and gases under high pressure. Use extreme caution when charging the refrigerant system. Do not pressurize the system higher than the design pressure marked on the unit's nameplate.

WARNING! Risk of pressurized doors flying open or slamming closed suddenly. Can cause serious injury. Do not attempt to open doors while fans are running. Do not turn on fans with doors open. Before opening the door, open all local and remote electric power supply disconnect switches, verify with a voltmeter that power is off, and verify that all fans have stopped rotating. Do not leave unsecured objects in the fan's bay after any maintenance operation.

WARNING! Risk of contact with flying objects. Can cause serious injury or death. Do not leave unsecured objects or tools in the fan's bay after performing maintenance operations. Re-install all panels before starting up this unit after maintenance is performed.

WARNING! Risk of very heavy, 250-lb (113.4-kg) condenser fan modules and 125-lb (57-kg) evaporator fan modules dropping downward suddenly. Can cause injury or death.
Support fan modules before removing mounting hardware. Use caution to keep body parts out of the fan modules pathway during repositioning. Only properly trained and qualified personnel should work on this equipment.

© 2026 Vertiv Group Corp.

All Rights Reserved.

WARNING! Risk of improper moving. Can cause equipment damage, injury or death. Use only lifting equipment that is rated for the unit weight by an OSHA-certified rating organization. The center of gravity varies depending on the unit size and selected options. The slings must be equally spaced on either side of the center of gravity indicator.

Unit weights are listed in Unit Weights on page 24 . Use the center of gravity indicators on the unit to determine the position of the slings.

WARNING! Risk of contact with high speed rotating fan blades. Can cause serious injury or death. Open all local and remote electric power supply disconnect switches, verify with a voltmeter that power is off, and verify that all fan blades have stopped rotating before working in the unit cabinet or on the fan assembly. If control voltage is applied, the fan motor can restart without warning after a power failure. Do not operate the unit with any or all cabinet panels removed.

WARNING! Risk of improper wiring, piping, moving, lifting and handling. Can cause equipment damage, serious injury or death. Installation and service of this equipment should be done only by qualified personnel who have been specially-trained in the installation of air-conditioning equipment and who are wearing appropriate, OSHA-approved PPE.

WARNING! Risk of improper wire sizing/rating and loose electrical connections. Can cause overheated wire and electrical connection terminals resulting in smoke, fire, equipment and building damage, injury or death. Use correctly sized copper wire only and verify that all electrical connections are tight before turning power On. Check all electrical connections periodically and tighten as necessary.

WARNING! Risk of wiring damage, short circuits and electric shock. Can cause overheated wiring, smoke, fire, activation of fire suppression systems and EMS personnel and equipment, building and equipment damage, injury or death. Insert CSA certified or UL listed bushings into holes and or knockouts used to route wiring through metal panels to protect the wire insulation from contact with sheet metal edges.

CAUTION: Risk of improper moving, lifting and handling. Can cause equipment damage or injury. Only properly trained and qualified personnel should work on this equipment. Condenser fan modules weigh in excess of weigh in excess of 250 lb (113.4 kg). Use proper lifting techniques and wear appropriate, OSHA-approved PPE to avoid injury and dropping the fan module during removal. Equipment used in handling/lifting, and/or installing the fan assembly must meet OSHA requirements. Use handling/lifting equipment rated for the weight of the fan assembly. Use ladders rated for the weight of the fan assembly and technicians if used during installation. Refer to handling/lifting, and/or installation equipment operating manual for manufacturer's safety requirements and operating procedures.

© 2026 Vertiv Group Corp.

All Rights Reserved.

CAUTION: Risk of contact with sharp edges, splinters, and exposed fasteners. Can cause injury. Only properly trained and qualified personnel wearing appropriate, OSHA-approved PPE should attempt to move, lift, remove packaging from or prepare the unit for installation.

CAUTION: Risk of contact with hot surfaces. Can cause injury. The compressor, refrigerant discharge lines, fan motor, and some electrical components are extremely hot during unit operation. Allow sufficient time for them to cool to a touch-safe temperature before working within the unit cabinet. Use extreme caution and wear appropriate, OSHA-approved PPE when working on or near hot components.

CAUTION: Risk of low-hanging panels. Can cause injury or equipment damage. Wear appropriate, OSHA-approved PPE when entering and working within the enclosure.

CAUTION: Risk of exposure to harmful noise levels. Can cause hearing injury or loss. Depending on the installation and operating conditions, a sound pressure level greater than 70 dB(A) may arise. Take appropriate technical safety measures. Operating personnel must wear appropriate, OSHA-approved PPE and observe all appropriate hearing-protection safety requirements.

NOTICE

Risk of improper power-supply connection. Can cause equipment damage and loss of warranty coverage.

Prior to connecting any equipment to a main or alternate power source (for example: back-up generator systems) for start-up, commissioning, testing, or normal operation, ensure that these sources are correctly adjusted to the nameplate voltage and frequency of all equipment to be connected. In general, power-source voltages should be stabilized and regulated to within ±10% of the load nameplate nominal voltage. Also, ensure that no three-phase sources are single-phased at any time.

NOTICE

Risk of oil contamination with water. Can cause equipment damage.

Vertiv CoolPhase Flex systems require the use of POE (polyolester) oil. POE oil absorbs water at a much faster rate when exposed to air than previously used oils. Because water is the enemy of a reliable refrigeration system, extreme care must be used when opening systems during service. If water is absorbed into the POE oil, it will not be easily removed and will not be removed through the normal evacuation process. If the oil is too wet, it may require an oil change. POE oils also have a property that makes them act as a solvent in a refrigeration system. Maintaining system cleanliness is extremely important because the oil will tend to bring any foreign matter back to the compressor.

NOTICE

Risk of improper operation in high-humidity conditions. Can cause unit damage and water carryover.

The Vertiv CoolPhase Flex operates only as a sensible cooling unit and does not provide dehumidification.

© 2026 Vertiv Group Corp.

All Rights Reserved.

NOTICE

Condenser fans should be operated manually if they have not run for an extended time in an outdoor environment. Before enabling the condenser for normal cooling operation fans should be run at full speed for at least three hours once a month to move the bearings and allow any condensate that may have ingressed to evaporate. Condenser firmware release 1.06.045 & later includes settings to operate condenser fans if they have been inactive for more than 30 days.

NOTICE

This equipment is required to be installed only in locations not accessible to the general public. Installation, service, and maintenance work must be performed only by properly trained and qualified personnel and in accordance with applicable regulations and manufacturers' specifications.

NOTICE

This unit is suitable for ITE (Information Technology Equipment) applications, such as data centers, computer rooms, or other ITE areas only.

NOTE: The Liebert® cooling unit has a factory-installed high pressure safety switch in the high-side refrigerant circuit.

Agency Listed

Standard 60-Hz units are CSA Certified to the harmonized U.S. and Canadian product safety standard UL/CSA 60335-2-40 4th Edition for “Heating and Cooling Equipment” and are marked with the CSA c-us logo.

© 2026 Vertiv Group Corp.

All Rights Reserved.

This page intentionally left blank

© 2026 Vertiv Group Corp.

All Rights Reserved.

2 Nomenclature and Components

This section describes the model number for the Vertiv CoolPhase Flex units and components.

2.1 Vertiv™ CoolPhase Flex Model Number Nomenclature

Table 2.2 below describes each digit of the model number.

Table 2.1 Vertiv™ CoolPhase Flex Model Number

Model Number Digits 1 to 10										Model Details											Model Number Digits 11 to 14			
1	2	3	4	5	6	7	8	9	10	11	12	13	14	15	16	17	18	19	20	21	22	23	24	25
D	H	4	0	0	F	Z	2	A	T	0	H	0	8	1	6	L	0	U	0	P	—	—	—	1

Table 2.2 Vertiv™ CoolPhase Flex Model Number Digit Definitions

Digit	Description
Digits 1 and 2 = Product Family DH = Vertiv CoolPhase Flex	
Digit 3 to 5 = Cooling Capacity, kW Nominal sensible capacity, kW	
Digit 6 = Air Discharge F = Perimeter, front inlet/front supply	
Digit 7 = System Type Z = Vertiv™ EconoPhase, R-454B	
Digit 8 = Airflow (Fan Type) 2 = Direct Drive Plenum Fans + VFD (Standard Airflow)	
Digit 9 = Power Supply A = 460V/3 ph/60 Hz B = 575V/3 ph/60 Hz (ETO)	
Digit 10 = Cooling System T = Tandem with digital scroll	
Digit 11 = LC Pump Motor Selection D = 15 HP	
Digit 12 = Display 2 = Vertiv Liebert iCOM (high definition, [2])	

© 2026 Vertiv Group Corp.
All Rights Reserved.

Table 2.2 Vertiv™ CoolPhase Flex Model Number Digit Definitions (continued)

Digit	Description
Digit 13 = Options	
	0 = None
	A = Air isolating gravity dampers
	1 = 120V damper motor control (control, damper field installed , ETO) [fail open or in-place]
	2 = 24V damper motor control (ETO) [fail open or in-place]
Digit 14 = Air Filter	
	8 = MERV 8, 4 in.
	9 = MERV 11, 4 in.
Digit 15 = Condenser Coil Option	
	1 = Non-coated coil
	C = Coated coil
Digit 16 = Enclosure Option	
	6 = Liebert® standard pebble-gray color
Digit 17 = High Voltage Option	
	L = Locking disconnect
	6 = Dual Locking Disconnects + ATS
Digit 18 = Option packages	
	0 = None
	A = Compressor overload (DH400 only)
Digit 19 = Monitoring Cards	
	B = Basic communication and connectivity
Digit 20 = Sensors	
	0 = None
	M = CFM sensor
Digit 21 = Packaging	
	P = Domestic
Digit 22 = Control Power	
	0 = Powered from main input feed
	A = Powered via a separate customer supplied 120V feed
	S = Quick start & capacitive buffer
Digit 23 = Option	
	B = Version 2

© 2026 Vertiv Group Corp.

All Rights Reserved.

Table 2.2 Vertiv™ CoolPhase Flex Model Number Digit Definitions (continued)

Digit	Description
Digit 24 = Condenser Option	A = Standard ambient with receiver D = Standard ambient without receiver H = High ambient - with receiver Q = Standard ambient quiet with receiver E = Standard ambient quiet without receiver
Digit 25 = Utility Options	1 = Customer supplied 120V Utility
Digit 26 = Power Meter	0 = None P = Power meter
Digit 27 = Conduit Option	0 = None 2 = Dual power feed + Low Voltage
Digit 28 = Option	0 = None
Digit 29 = Option	0 = None
Digit 30 = Power Requirements	R = WYE with solidly grounded neutral 1 = WYE with high resistance ground (HRG) & Delta power supply
Digit 31 = Load Device	D = Door cooling C = Chip Cooling
Digit 32 = UPS	A = Vertiv™ Liebert® APM2 - without batteries
Digit 33-36	0 = Placeholder
Digit 37 – 39 = Configuration Code	
Digit 40 = Configuration Code	S = SFA

© 2026 Vertiv Group Corp.
All Rights Reserved.

2.2 Component Location

The unit component locations are described in the submittal documents included in the Submittal Drawings on page 99 .

The following table lists the relevant documents by number and title.

Table 2.3 Component Location Drawings

Document Number	Title
20000202	Component Location Diagram 400kW Hybrid Perimeter Unit

2.3 Airflow Schematic

Table 2.4 Airflow Configuration Drawings

Document Number	Title
20000133	Airflow Schematic, 400kW Perimeter Unit

2.3.1 Liquid Cooling Minimum Load

The Vertiv DH400/500 minimum operating load is 10% Call for Cooling (CFC).

- For the DH400 60Hz system, 10% CFC correlates to a minimum load of 50 kW.

Loads below minimum values unfavorably affect system operation.

NOTE: Unit may cycle with over cooling at low loads during some outdoor conditions.

© 2026 Vertiv Group Corp.

All Rights Reserved.

3 Vertiv™ EconoPhase Pumped Refrigerant Economizer with a Vertiv™ CoolPhase Flex System

Vertiv CoolPhase Flex systems are designed to provide precision air conditioning to computer racks in a data center or computer room as efficiently and effectively as possible.

A Vertiv CoolPhase Flex system with Vertiv EconoPhase is composed of individually-shipped components or components assembled together on skids.

System

- Vertiv CoolPhase Flex—High efficiency, floor mounted indoor unit
- Vertiv™ CoolPhase Condenser Heat rejection skid—Air cooled microchannel condenser, premium version with a Vertiv EconoPhase pumped-refrigerant economizer (PRE)

The Vertiv EconoPhase PRE is an add on module for use with an air cooled Vertiv CoolPhase Flex system. The Vertiv EconoPhase allows the system to switch to EconoPhase operation when the outdoor temperature is low enough to provide the required temperature difference between the inside air and the outside air, which, in turn, provides significant energy savings because the compressor(s) do not operate. At lower temperatures, the system switches one or both circuits from Compressor Mode to Pump Mode. The pump consumes roughly one-tenth of the power consumed by the compressor.

The Vertiv EconoPhase system maintains this energy efficiency by employing the heat absorption properties of a liquid (pumped refrigerant) through a phase change. Refrigerant is pumped as a liquid, becomes a gas within the Vertiv CoolPhase Flex evaporator and is then returned to the condenser where it condenses to a liquid. The sub-cooled liquid refrigerant from the condenser is run directly into the Vertiv EconoPhase pumps and circulates back to the Vertiv CoolPhase Flex unit. See Figure 3.1 below .The system operates as a typical air cooled direct expansion system when outdoor ambient conditions are unfavorable to Vertiv EconoPhase operation. The pumps in the Vertiv EconoPhase PRE are turned off and by-passed during compressor operation.

Figure 3.1 Vertiv™ EconoPhase Pumped Refrigerant Pressure Enthalphy Diagram

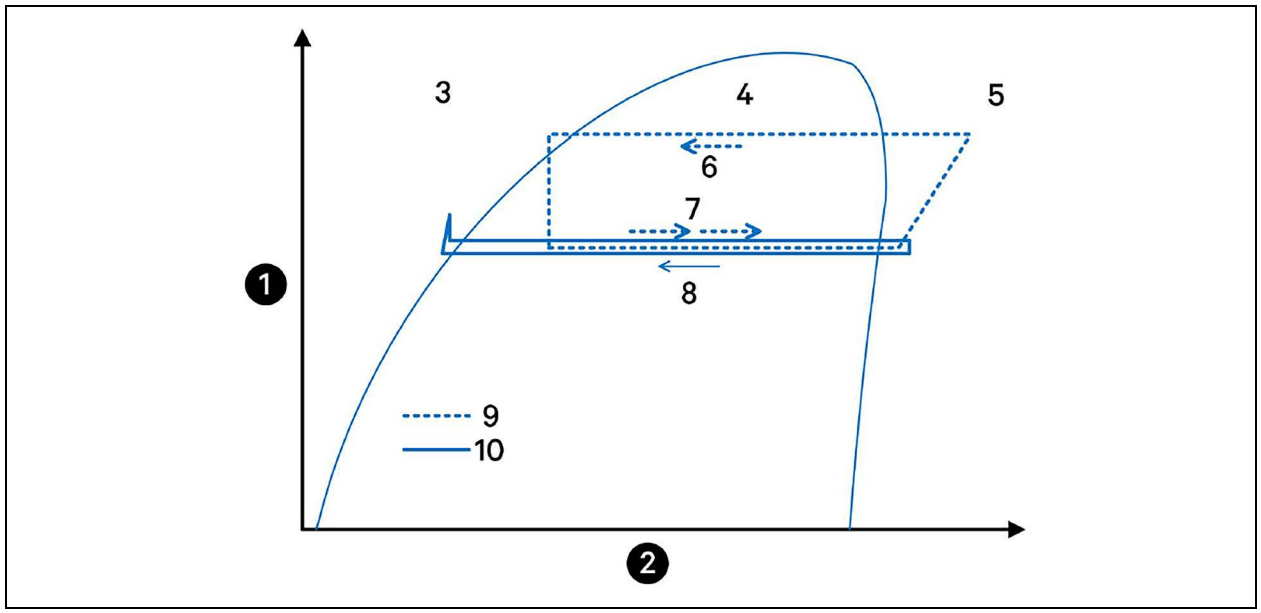

© 2026 Vertiv Group Corp.

All Rights Reserved.

Item	Description	Item	Description
1	Pressure	6	Condenser (DX mode)
2	Enthalpy	7	Indoor unit
3	Liquid	8	Condenser (pump mode)
4	Liquid/Vapor maximum	9	Traditional vapor compression cycle
5	Vapor	10	Vertiv EconoPhase cycle

3.1 Overview of Operating Modes

Each circuit on a system combining a Vertiv EconoPhase, Vertiv CoolPhase Flex, and Vertiv CoolPhase Condenser has six distinct operating modes:

- Air Cooling: Idling with compressor and Vertiv EconoPhase pumps off.
- Liquid Cooling: Idling with compressor, Vertiv EconoPhase pumps off.
- Start up
- Compressor operation
- Compressor to Vertiv EconoPhase pump changeover
- Vertiv EconoPhase pump operation
- Vertiv EconoPhase pump to compressor changeover

A circuit will run most of the time in either compressor or Vertiv EconoPhase pump operation mode. These modes both efficiently remove heat from the conditioned space or primary fluid loop and reject it via the air cooled condenser. The flow paths during each mode of operation are detailed in Figure 3.2 on the facing page , Figure 3.3 on the facing page , Figure 3.4 on page 14 , and Figure 3.5 on page 15 .

© 2026 Vertiv Group Corp.

All Rights Reserved.

Figure 3.2 Air Cooling - Compressor Operation

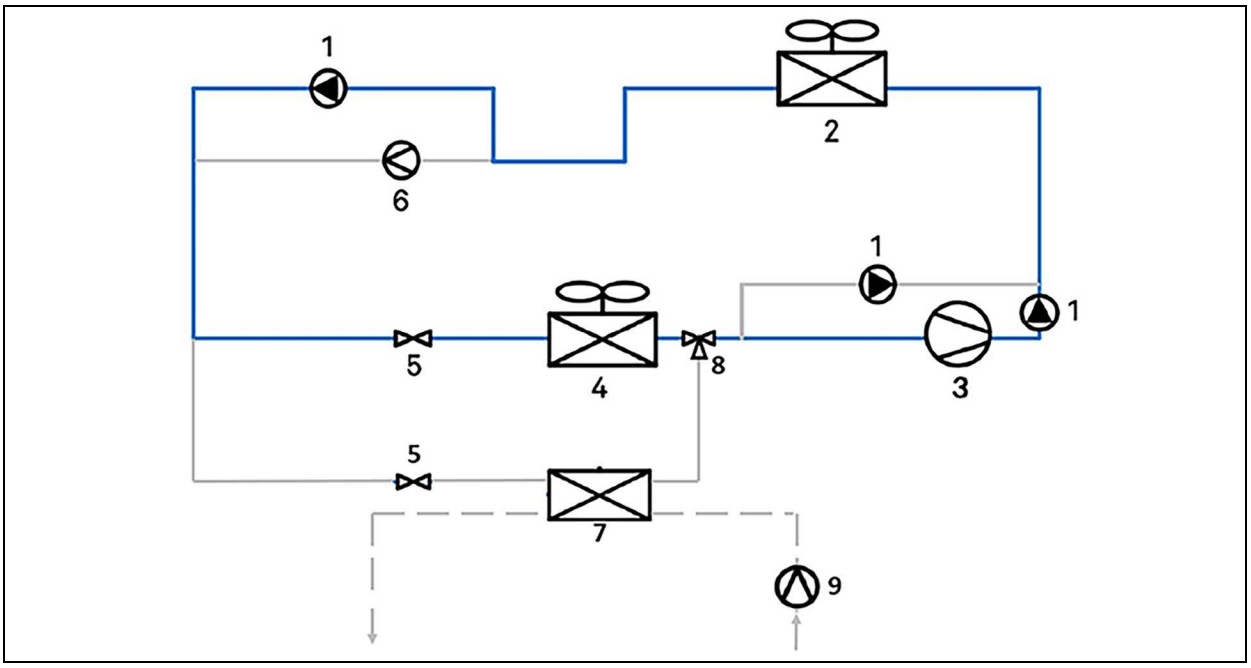

Figure 3.3 Air Cooling - Vertiv™ EconoPhase Pump Operation

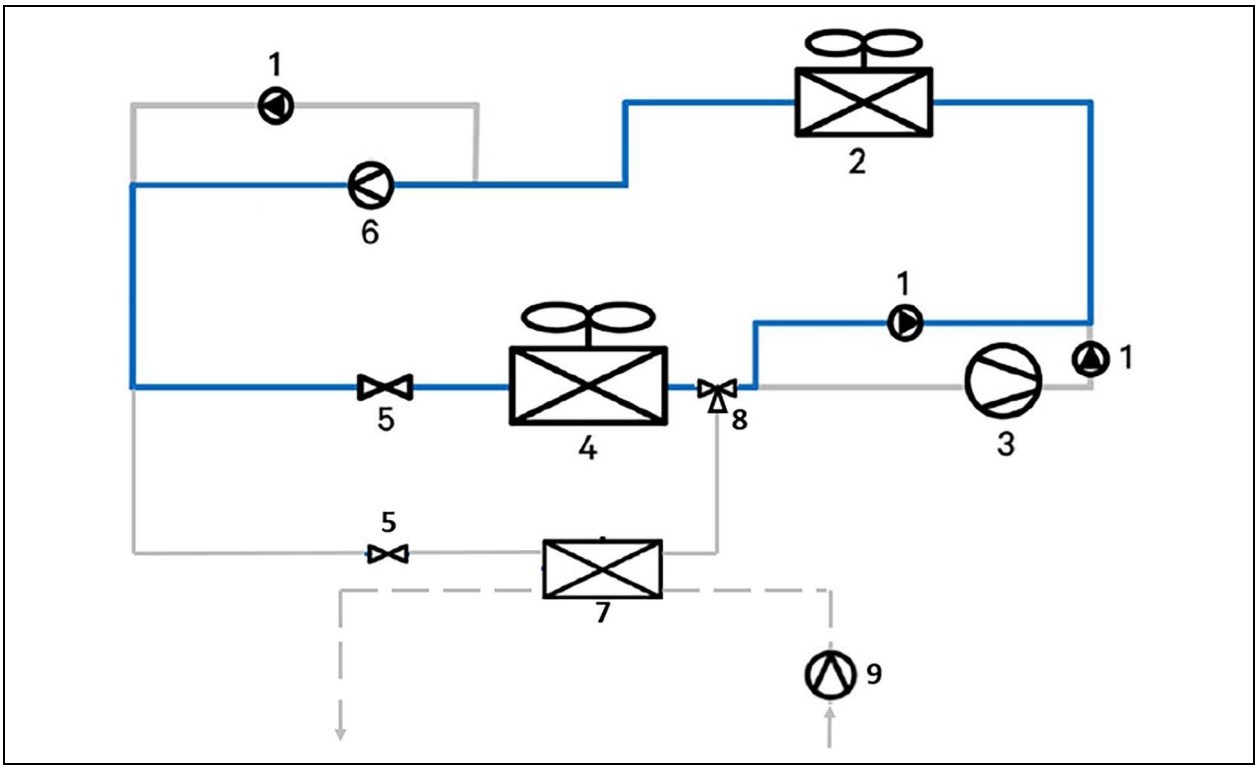

© 2026 Vertiv Group Corp.

All Rights Reserved.

Figure 3.4 Liquid Cooling - Liebert® Compressor Operation

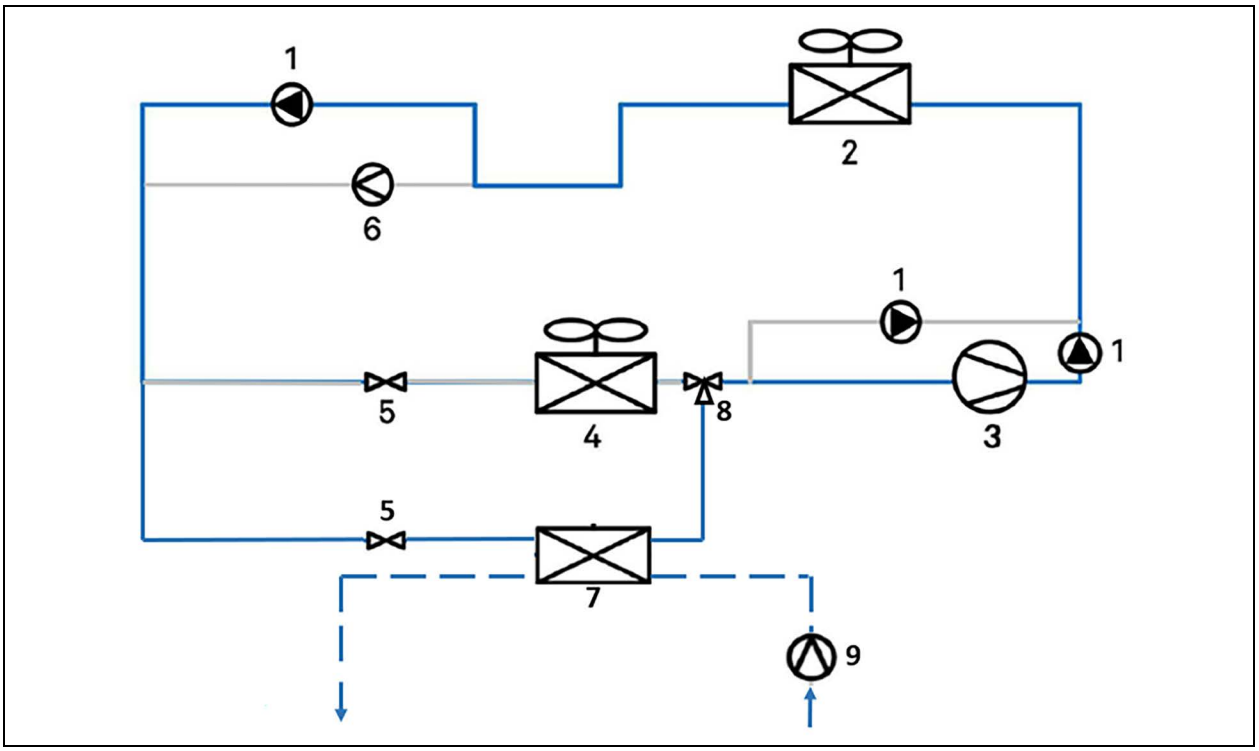

© 2026 Vertiv Group Corp.

All Rights Reserved.

Figure 3.5 Liquid Cooling - Vertiv™ EconoPhase Pump Operation

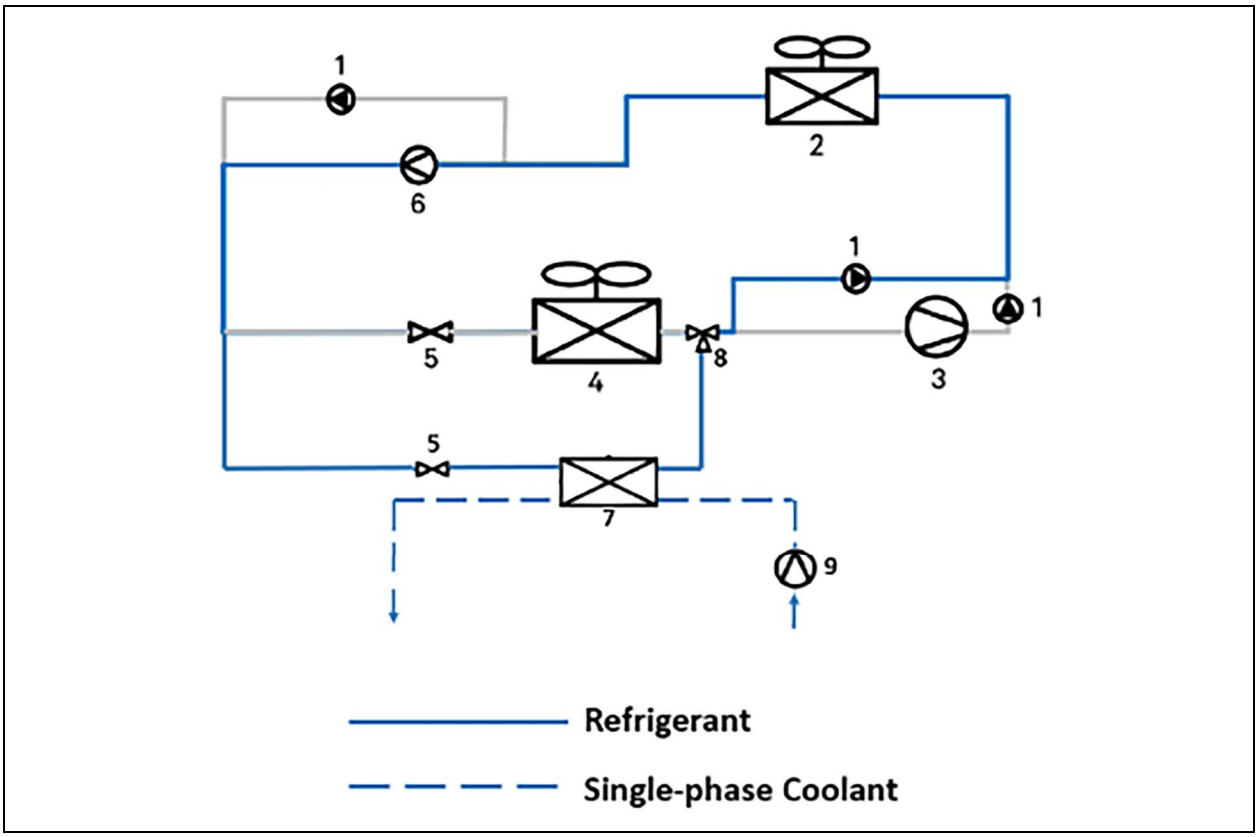

See submittal drawing 20000215: DH400 Piping Schematic (Refrigerant and Water side) included in Submittal Drawings on page 99 .

Item	Description	Item	Description
1	Check Valve	6	Vertiv EconoPhase Pump
2	Condenser	7	Braze Plate Heat Exchanger (BPHE)
3	Compressor	8	3-way Ball Valve
4	Evaporator	9	Liquid Cooling Pump
5	Electronic Expansion Valve (EEV)		

A couple of differences to note between Compressor Mode and Vertiv EconoPhase operation:

- The unit does not dehumidify in Vertiv EconoPhase operation. If dehumidification is desired, EconoPhase operation must be disabled.
- Bubbles may be seen in the site glass in the indoor unit when the system is in Vertiv EconoPhase operation. This does not necessarily mean the system is low on charge. Refer to the Vertiv™ CoolPhase Perimeter User Manual (available at www.Vertiv.com) for complete charging instructions for the Vertiv CoolPhase Perimeter/Vertiv EconoPhase system.

© 2026 Vertiv Group Corp.

All Rights Reserved.

3.2 Vertiv™ EconoPhase Operation

The Vertiv EconoPhase unit enables the Vertiv CoolPhase Flex system to operate in any of three modes to control temperature, depending on the outdoor temperature and the load.

- Compressor Mode
- Pump Mode
- Mixed Mode

When the outdoor temperature becomes low enough to provide the required temperature difference between the inside air and the outside air, there is no need to compress the refrigerant to a higher pressure/temperature. When the outdoor temperature is low enough, the system switches from Compressor Mode to Pump Mode or to Mixed Mode.

- **Compressor Mode**: All available compressors may be used to maintain the control temperature. All the available Vertiv EconoPhase pumps are Off. The control will typically run in this mode when the load and temperatures are such that full or partial Vertiv EconoPhase operation is not possible, or because certain pumps have experienced alarms.
- **Pump Mode**: All of the available pumps may be used to maintain the control temperature. All the compressors in the system are off. The control will typically run in this mode when load and temperatures permit.
- **Mixed Mode** (Dual pump models only): The pump in Circuit 1 is on and the compressor(s) in Circuit 2 is on. Some systems may not have Mixed Mode capability, depending on the manufacture date. Contact the factory to inquire about a software upgrade.

© 2026 Vertiv Group Corp.

All Rights Reserved.

3.2.1 Vertiv™ EconoPhase Control

Vertiv EconoPhase operation has three main controlled parameters:

- Room temperature
- Refrigerant temperature
- Pump pressure differential (outlet pressure - inlet pressure)

Room Temperature

When the system is in Pump Mode, the room temperature is controlled by modulating the pump speed with a variable frequency drive. The load requirement will determine if one pump or two are needed. Figure 3.6 below shows the sequence of operation in terms of pump speed. Minimum speed is 45% and maximum speed is 100%. See Table 3.1 below , for more detail on the events depicted and the conditions that trigger action.

Figure 3.6 Two Circuit Pump Control

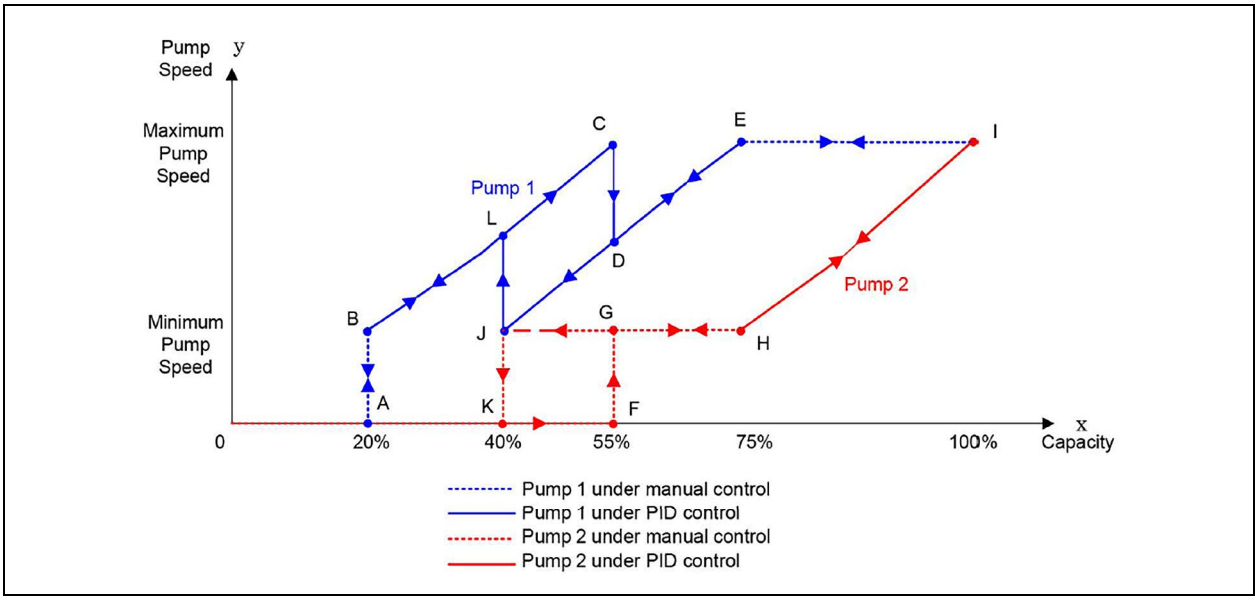

Table 3.1 Events and Actions of Two Circuit Pump Control

Event	Condition to Trigger Action	Action
B to A	Pump 2 Off; and (Pump 1 at minimum speed for 60 sec.; and Delta T [indoor air temperature - setpoint] < -4°F (2.2°C).	Pump 1 turns Off; Pump 2 remains Off
A to B	Both Pump 1 and Pump 2 Off; and Delta T >0°F (0°C)	Pump 1 turns On and runs on PID; Pump 2 remains Off
F to G	Pump 2 Off; and Pump 1 at maximum speed for 600 seconds; and Delta T >1°F (-0.6°C)	Pump 2 turns On at starting speed, then goes to minimum speed immediately. Pump 1 continues to run on PID
At E and H upward	Pump 1 at maximum speed; and Pump 2 at minimum speed; and Delta T >1°F (-0.6°C)	Pump 1 runs at maximum speed, while Pump 2 runs on PID

© 2026 Vertiv Group Corp.

All Rights Reserved.

Table 3.1 Events and Actions of Two Circuit Pump Control (continued)

Event	Condition to Trigger Action	Action
At E and H downward	Pump 1 at maximum speed; and Pump 2 at minimum speed; and Delta T < -1°F (-0.6°C)	Pump 1 runs on PID, while Pump 2 runs at minimum speed
J to K	Both Pump 1 and Pump 2 at minimum speed for 60 sec.; and Delta T < -1°F (-0.6°C)	Pump 2 turns Off, while Pump 1 runs at minimum speed
Pump 2 Early Startup	Pump 2 Off; and Delta T >2°F (1.1°C)	No action to Pump 1; turn On Pump 2 at 80% speed, once the start-up procedure is finished, step change to minimum speed immediately

In the case of a transition from Compressor Mode to Pump Mode, the pumps will be given initial speeds based on the call for cooling at the time of transition. The pumps will go to this initial speed after the start-up routine is completed. This will mean that, depending on the load, both pumps will start immediately at the transition to Pump Mode from Compressor Mode.

When the system is in Mixed Mode, the room temperature is controlled either by modulating the digital compressor(s) on Circuit 2 with the pump on Circuit 1 at 100%, or by modulating the pump speed on Circuit 1 with the compressor(s) operating at the minimum digital percent.

Refrigerant Temperature

When a circuit is running in Pump Mode, the refrigerant temperature is controlled by the condenser fan speed. When a circuit switches from Compressor Mode to Pump Mode, the condenser fan speed control changes from pressure control to temperature control, with the controlled parameter being condenser outlet refrigerant temperature.

The default setpoint on Circuit 1 is 45°F (7.2°C), while on Circuit 2 it is 37°F (2.8°C). The condenser fan speed will modulate to provide the respective temperature. But if the outdoor temperature is warm enough, or if the load is high enough, the fans might be at 100% and the actual refrigerant temperature might be above the setpoint. In that case, the temperature will depend on the heat rejection capability of the condenser at the given conditions.

Actual fan speed will depend on the load and the outdoor temperature. The fan speed will be lower for a given heat load with lower outdoor temperature in order to maintain the setpoint.

Because the refrigerant temperature could be below the dew point inside, the indoor piping must be insulated to prevent condensation. In addition, the outdoor piping must be insulated so that heat is not lost to the outdoor air at very low ambient temperatures, causing the refrigerant temperature to fall and increasing the possibility of frost at the evaporator.

Pump Pressure Differential

The pump pressure differential must to be maintained above a minimum for cooling and lubricating flow to be provided to the pump motor and bearings. The differential is controlled by EEV position. When the system switches to Vertiv EconoPhase operation, the EEV control changes from superheat control to manual control. The Vertiv Liebert iCOM controller then signals the EEV to control its position based on pump differential , unless during pump mode operation, the suction superheat drops below the minimum acceptable level, then the EEV will begin to close and restrict refrigerant mass flow to build superheat.

The pump differential setpoint is 20 psid. If the pump is running at a high speed at a steady state, the actual pump differential may be above 25 psid (172.4 kPa).

If the pump differential drops below 5 psid (34.5 kPa) continuously for 30 minutes, the system will switch to direct expansion mode for 30 minutes. The system will switch back to Vertiv EconoPhase operation if the conditions are still qualified for pump operation.

© 2026 Vertiv Group Corp.

All Rights Reserved.

3.2.2 Pump Start-up Routine

When either pump attempts to start, the first attempt will be at 80% of full speed. If flow is not established (as detected by pump differential being at least 12 psid (82.7 kPa) within 60 seconds), the pump will turn off for 10 seconds before trying again at 90% speed. If flow is still not established, the pump will turn off for 10 seconds before trying again at 100% speed. If flow is not established after the 100% speed attempt, the system will switch to DX mode for 10 minutes before attempting to start the pumps again if the conditions are still compatible.

The second start-up routine is the same as above. If the second start-up attempt is unsuccessful, the system will switch to DX mode for 60 minutes before trying again.

The third start-up routine will be the same as above. If the third start-up attempt is unsuccessful, a “Pump Startup Fail” alarm will be displayed and Vertiv EconoPhase operation will be locked out until the user manually resets the event at the Vertiv Liebert iCOM.

3.2.3 Switch from Compressor Operation to Pump Operation

The Vertiv Liebert iCOM runs the system in the most efficient operating mode, given the load and temperature conditions. If Mixed Mode is available, the system will change from Compressor Mode to Mixed Mode when partial Vertiv EconoPhase operation is possible and from Compressor or Mixed Mode to Pump Mode when full EconoPhase operation is possible.

3.2.4 Switch from Pump Operation to Compressor Operation

The unit will switch from Pump Mode to Mixed Mode or Compressor Mode when at least one of the following is true:

- The difference between the actual controlled air temperature and the setpoint is 75% into the Cooling Proportional Band for 5 minutes. The default is 75%, but the percentage can be changed at the Vertiv Liebert iCOM.

NOTE: At start-up and at switchover from compressor operation to pump operation, more time is allowed to bring the temperature under control, but the temperature will never be allowed to go outside the cooling proportional band of +2°F (1.2°C).

- The pump differential pressure is below 5 psid for 30 minutes.
- The refrigerant temperature leaving the pump is below 30°F (-1.1°C) for 60 minutes.
- The pump does not establish flow at a pump start-up attempt.
- Power is lost at the Vertiv EconoPhase unit.

© 2026 Vertiv Group Corp.

All Rights Reserved.

This page intentionally left blank

© 2026 Vertiv Group Corp.

All Rights Reserved.

4 Pre-installation Preparation and Guidelines

4.1 Storage before Installation

Inspect the unit periodically for condensation inside the unit or other signs of other effects of the storage environment. Cut an entry opening below the condenser to allow electric panel and interior component inspection. Ventilation and heating may be required to protect components from failure during long storage periods.

The unit must not be stored where environmental contaminants or hazards that could harm the unit or its operation are present. This would include but not be limited to chemical exposure, air pollution, corrosion causing agents, and other physical hazards.

Rotate the fans and motor shaft by hand periodically for several revolutions. Look for signs of lubrication problems or obstructions.

If the unit is equipped with a Vertiv Liebert APM2 UPS, storage conditions are 0 to 95% relative humidity (non-condensing) and between -13 °F to 131 °F (-25 °C to +55 °C). If equipped with batteries store in a dry and cool place with good ventilation. The most suitable battery storage temperature ranges from 68 °F (20 °C) to 77 °F (25 °C). See Vertiv Liebert APM2 manual for more information.

NOTE: Before installing unit, determine whether any building alterations are required to run wiring and duct work. Follow all unit dimensional drawings and refer to the submittal engineering dimensional drawings of individual units for proper clearances.

Refer to Table 2.2 on page 7 , and submittal drawings to determine the type of system being installed and anticipate building alterations and duct work needed.

The unit and anchor dimensions are described in the submittal documents included in the Submittal Drawings on page 99 .

- Verify that mounting surface is level, solid and sufficient to support the unit. See Unit Weights on page 24 , for unit weights.
- Verify that the support structure for the unit (concrete or other type) has a flat, regular surface and is adequate to support the unit operating weight.
- Verify that adequate water-control/drain system is in place. If connecting the drip-pan cleanout line, refer to the appropriate submittal document in Table 4.1 on the next page , for the cleanout line location and port size.
- Verify that the high-voltage electric-supply lines are adequately sized based on the electrical specification on the unit's name plate and meet local code.
- Verify that the utility electric-supply lines (lights and outlet) are adequately sized and meet local code.
- Verify that all control and communication wiring are properly routed to the unit control panel and meet local code.
- Confirm that the conditioned space has a proper envelope and vapor barrier.
- Handle outside air and humidity control externally to the Vertiv CoolPhase Flex unit. The Vertiv CoolPhase Flex does not control humidity and is not intended to handle outside air.
- Allow at least the minimum recommended clearances for maintenance and service. See the appropriate submittal documents for dimensions in Submittal Drawings on page 99 .

© 2026 Vertiv Group Corp.

All Rights Reserved.

- Ensure that there is no obstruction when installing duct work connections and transitions to minimize friction losses and turbulence.
- Verify that all duct joints are sealed to prevent air leakage or water penetration.
- If unit is installed but will not be commissioned for a long period, operate the fans or install electric heaters to prevent internal condensation. Refer to Storage before Installation on the previous page , and follow the guidelines until commissioned.

4.2 Planning Dimensions

The unit and anchor dimensions are described in the submittal documents included in the Submittal Drawings on page 99 .

The following table lists the relevant documents by number and title.

Table 4.1 Dimension Planning Drawings

Document Number	Title
20000209	Cabinet & Anchor Dimensional Data 400kW Hybrid Perimeter Unit
20000212	Equipment Floor Plan 400kW Hybrid Perimeter Unit
20000213	Drip Pan Cleanout Access & Location 400kW Hybrid Perimeter Unit

4.3 Connections and System Setup

4.3.1 Electrical Connections

- Three-phase electrical service is required for all models. Electrical service must conform to national and local electrical codes. See Electrical Field Connections on page 43 , for the details.
- Plan the routing of wiring and duct work to the unit. Refer to the appropriate electrical-connection drawings for your system in Submittal Drawings on page 99 .

4.3.2 Evaporator Drip Pan Connection

Connect the evaporator cleanout line to an adequate water-drain system. See Figure 4.1 on the facing page for the connection on the unit. Observe the following requirements when installing and routing the cleanout line:

- Insulate the line with heat trace so it will not freeze.
- The line must be the full size of the drain connection. The connection port is 1-in. pipe with CPVC 1-in. FPT fitting.
- Slope the drain line continuously away from the unit, and pitch the drain line toward the drain.
- The line must be made of a material that is suitable for draining water and be rigid enough that it does not sag between supports, which creates unintentional traps.
- The drain line must comply with all applicable codes.

© 2026 Vertiv Group Corp.
All Rights Reserved.

Figure 4.1 Drip Pan Clean Out Line Location

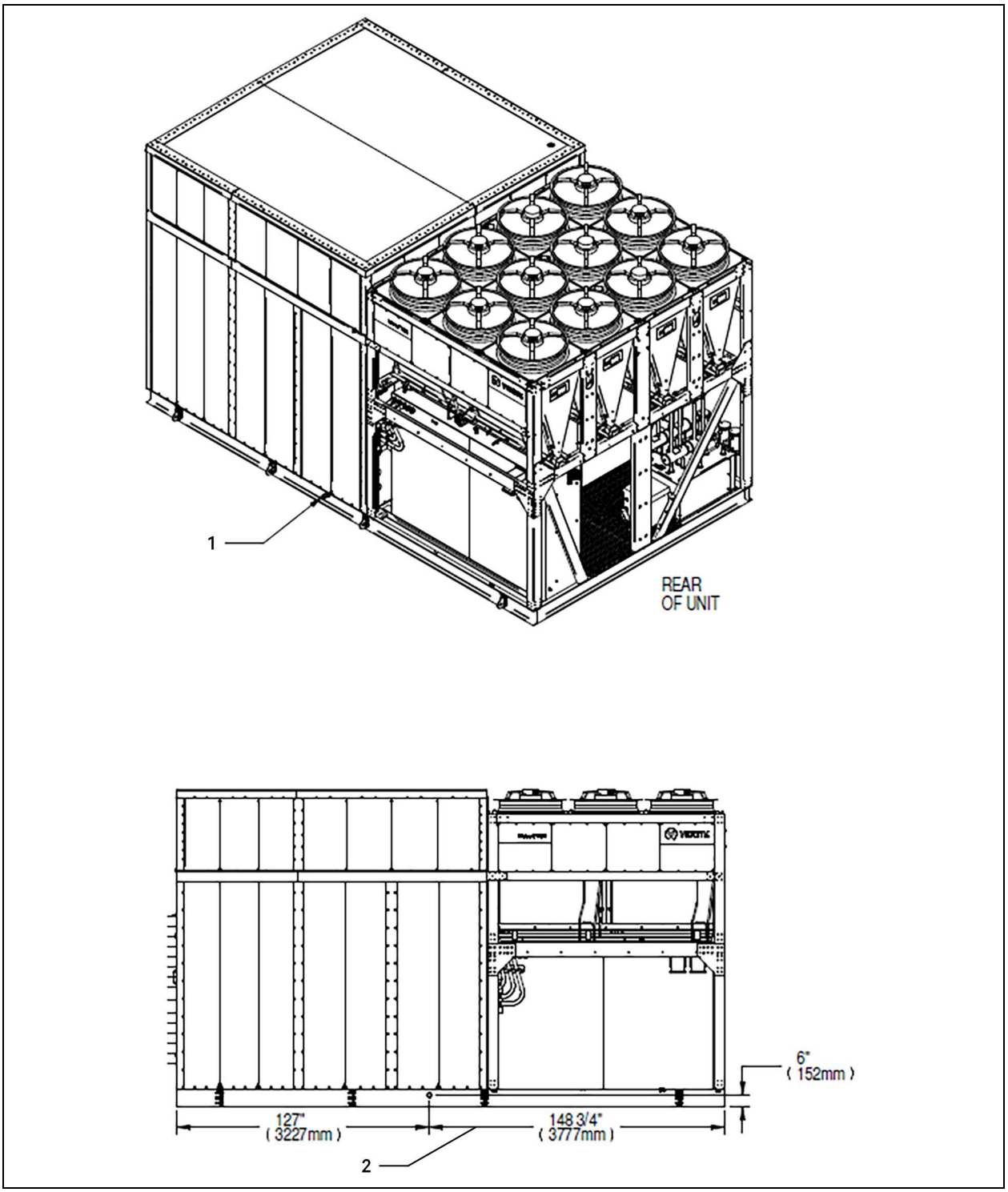

© 2026 Vertiv Group Corp.
All Rights Reserved.

Item	Description
1	Ø 1" pipe with CPVC 1" FPT fitting clean out port for service pan
2	Side view showing clean out location

4.4 Operating Conditions

The Vertiv CoolPhase Flex must supply air to a conditioned space within the operating envelope that ASHRAE recommends for data centers. Operating the Vertiv CoolPhase Flex outside of this envelope can decrease equipment reliability. Refer to ASHRAE's publication, "Thermal Guidelines for Data Processing Environments."

4.4.1 Cooling

Table 4.2 below , provides the recommended maximum and minimum return-air temperature and dew-point conditions for the Vertiv CoolPhase Flex Applications.

Table 4.2 Application Envelope for DH400

Control Settings	DH400
Maximum Return Air Temperature	105°F (40°C)
Minimum return-air temperature	85°F (29°C)
Maximum dew point	59°F (15°C)
Maximum Supply-Air Setpoint	80°F (27°C)
Minimum Supply Air Control Setpoint	68°F (20°C)
Maximum Return Fluid Temperature	115°F (46°C)
Minimum Return Fluid Temperature	58°F (14°C)
Maximum Supply Fluid Setpoint	85°F (29°C)
Minimum Supply Fluid Control Setpoint	45°F (7°C)
*Note: DH400 minimum air-cooling side temperature differential at full load is 25°F (14°C). *Note: DH400 minimum liquid-cooling side temperature differential at full load is 13°F (7°C).	

Operating outside this envelope can decrease equipment reliability.

NOTE: When running above 77°F (25°C) supply-air temperature, the superheat readings on the refrigeration circuits may be higher than 13°F (7.2°C). The EEVs will run out of stroke and limit mass flow, which will result in higher than normal superheat.

4.5 Unit Weights

Table 4.3 Domestic Shipping Dimensions and Weights

Model #	Domestic Packaging	
	Unit Shipping Weight, lb (kg)	Shipping Dimensions, in. (m)
DH400F	28,000 lbs. (12,700 kg)	13 ft 2 in. (4.0 m) x 23 ft 4 in. (7.1 m) x 13 ft. 6 in. (4.0 m)

© 2026 Vertiv Group Corp.
All Rights Reserved.

4.6 A2L Refrigerant Effective Dispersal Volume Calculation

Engineer of record to determine the Refrigerant Charge m_c and required minimum Effective Dispersal Volume V_{ED} of the space to which the appliance can be utilized for the cooling of ITE areas.

The required minimum Effective Dispersal Volume V_{ED} is a function of the refrigerant charge, m_c and is represented by the following equation:

$V_{ED} = m_c / 0.5 \times LFL$

V_{ED} = the minimum Effective Dispersal Volume in ft^3 (m^3)

m_c = the refrigerant charge of the largest single circuit of a unit in lbs (kg)

0.5 = the concentration factor

LFL = the Lower Flammability Limit in lbs/1,000 ft^3 (kg/m^3)

NOTE: The LFL of R-454B is 18.5 lbs/1,000 ft^3 (296.8 g/m^3) according to ASHRAE 34-2024.

Minimum Effective Dispersal Volume V_{ED} of the space shall be based on altitude of the installation location. For locations above sea level, the engineer of record will need to adjust the value of LFL in accordance with ANSI/ASHRAE 34 before applying it to the equation for determining the required minimum Effective Dispersal Volume V_{ED}.

Table 4.4 Charge Size vs Effective Dispersal Volume

	DP with Receiver
Charge Size Per Circuit (lbs)	83
Effective Dispersal Volume (ft^3)	9,000

4.6.1 How to Determine the Effective Dispersal Volume of an ITE Area

Engineer of record must ensure the room has the required minimum Effective Dispersal Volume for the refrigerant charge amount of the largest refrigerant circuit. If installing the unit in an ITE area with less than the required V_{ED} (Effective Dispersal Volume), it is required to have a mechanical ventilation system(s) in accordance with ASHRAE 15.

Volume Calculations shall be based on the overall volume of space available to which the refrigerant disperses within the Circulation Airflow in the event of a refrigerant leak. This overall volume shall be modified with the appropriate deductions. For the purposes of determining the Effective Dispersal Volume of an ITE area the following shall apply:

a. The Effective Dispersal Volume shall only include the circulated airflow of the system.
b. The Effective Dispersal Volume shall initially include the ITE area enclosed by the floor, walls, and ceiling of that space.
c. When the Circulation Airflow includes underfloor spaces, suspended ceiling spaces, or other partitioned spaces, such as equipment galleries, the volume of those spaces may be included.

In general, the volume of equipment, piping, wiring, or other apparatus that consume space within and are isolated from the Circulation Airflow shall be deducted from the Effective Dispersal Volume. The following deductions shall be applied:

a. When the Circulation Airflow has been fully contained on both hot and cold sides of the aisle, via ducts or other apparatus, any room volume outside of that containment shall not be included when calculating the Effective Dispersal Volume.

© 2026 Vertiv Group Corp.
All Rights Reserved.

b. When the overall volume of space available, or a partitioned portion of that volume includes ducted openings from partially ducted systems, some volume of that space may require a deduction. No volume greater than four feet away in height from the upper most supply or return duct opening in the space may be included when calculating the Effective Dispersal Volume, unless an analysis of the airflow has been conducted to show that the volume of air has effective movement for the mixing of a leaked refrigerant.

c. Obstructions of tubing, piping, wiring, etc., consuming more than 0.0071 m^3 (0.25 ft^3) of space shall be included in the deductions from the overall volume.

d. The ITE within the circulated airflow shall be evaluated for their deduction from the Effective Dispersal Volume. The deducted volume of the ITE shall be based on the designed maximum capacity or fill of the servers.

e. As a maximum value, no more than 75% of the ITE's volume shall be included as circulating air space in the Effective Dispersal Volume. The total volume of the ITE shall be defined by the overall dimensions of its ITE enclosure. Small gaps in between individual server racks shall not be included in the Effective Dispersal Volume.

f. Any other volume within the circulation airflow that is otherwise enclosed or partitioned off from the airflow shall be deducted in the calculation of the Effective Dispersal Volume.

NOTICE

If the unit is not installed in a conditioned space, the location must be constructed such that should any refrigerant leak occur, it will not stagnate and create a fire or explosion hazard.

WARNING! Auxiliary devices which may be a POTENTIAL IGNITION SOURCE shall not be installed in the duct work. Examples of such POTENTIAL IGNITION SOURCES are hot surfaces with a temperature exceeding 700°C and electric switching devices. Only auxiliary devices approved by Vertiv or declared suitable with the refrigerant shall be installed in connecting ductwork.

WARNING! When appliances connected via an air duct system to one or more rooms with A2L REFRIGERANTS are installed in a room with an EFFECTIVE DISPERSAL VOLUME VED less than the minimum as determined by A2L Refrigerant Effective Dispersal Volume Calculation on the previous page , that room shall be without continuously operating open flames (e.g. an operating gas appliance) or other POTENTIAL IGNITION SOURCES (for e.g. an operating electric heater, hot surfaces).

© 2026 Vertiv Group Corp.

All Rights Reserved.

5 Equipment Inspection and Handling

SAFETY INFORMATION

WARNING! Risk of improper moving. Can cause equipment damage, injury or death. Use only lifting equipment that is rated for the unit weight by an OSHA-certified rating organization. The center of gravity varies depending on the unit size and selected options. The slings must be equally spaced on either side of the center of gravity indicator. Use the center of gravity indicators on the unit to determine the position of the slings.

Unit weights are listed in Unit Weights on page 24 .

CAUTION: Risk of contact with sharp edges, splinters, and exposed fasteners. Can cause injury. Only properly trained and qualified personnel wearing appropriate, OSHA-approved PPE should attempt to move, lift, remove packaging from or prepare the unit for installation.

- Carefully inspect all items for visible or concealed damage.
- Report damage immediately to the carrier and file a damage claim with a copy sent to Vertiv or to your sales representative.

Equipment Recommended for Handling the Unit:

- Lift beam
- Slings
- Spreader bars
- Shims and blocks

5.1 Rigging Instructions

The rigging instructions are described in the submittal documents included in the Submittal Drawings on page 99 .

The following table lists the relevant documents by number and title.

Table 5.1 Rigging Instruction Diagrams

Document Number	Title
20000210	Rigging Instructions, 400kW Hybrid Perimeter Unit

© 2026 Vertiv Group Corp.
All Rights Reserved.

5.2 Rigging to Lift the Unit

See **Figure 5.1** below , for the location of the lifting lugs on the unit, and use spreader bars and/or shimmed blocks to prevent damage to the unit.

- Unit must remain level when lifted to prevent damage to internal equipment.
- Do not place unit directly on the ground. If the unit must be set down, use shims or blocks for leveling and to keep unit off the ground.

Before lifting or moving, clear the area of all unnecessary personnel. Clear the area of any debris and unrelated tools or foreign objects.

Figure 5.1 Lugs to Attach Rigging to a Perimeter Unit Configuration

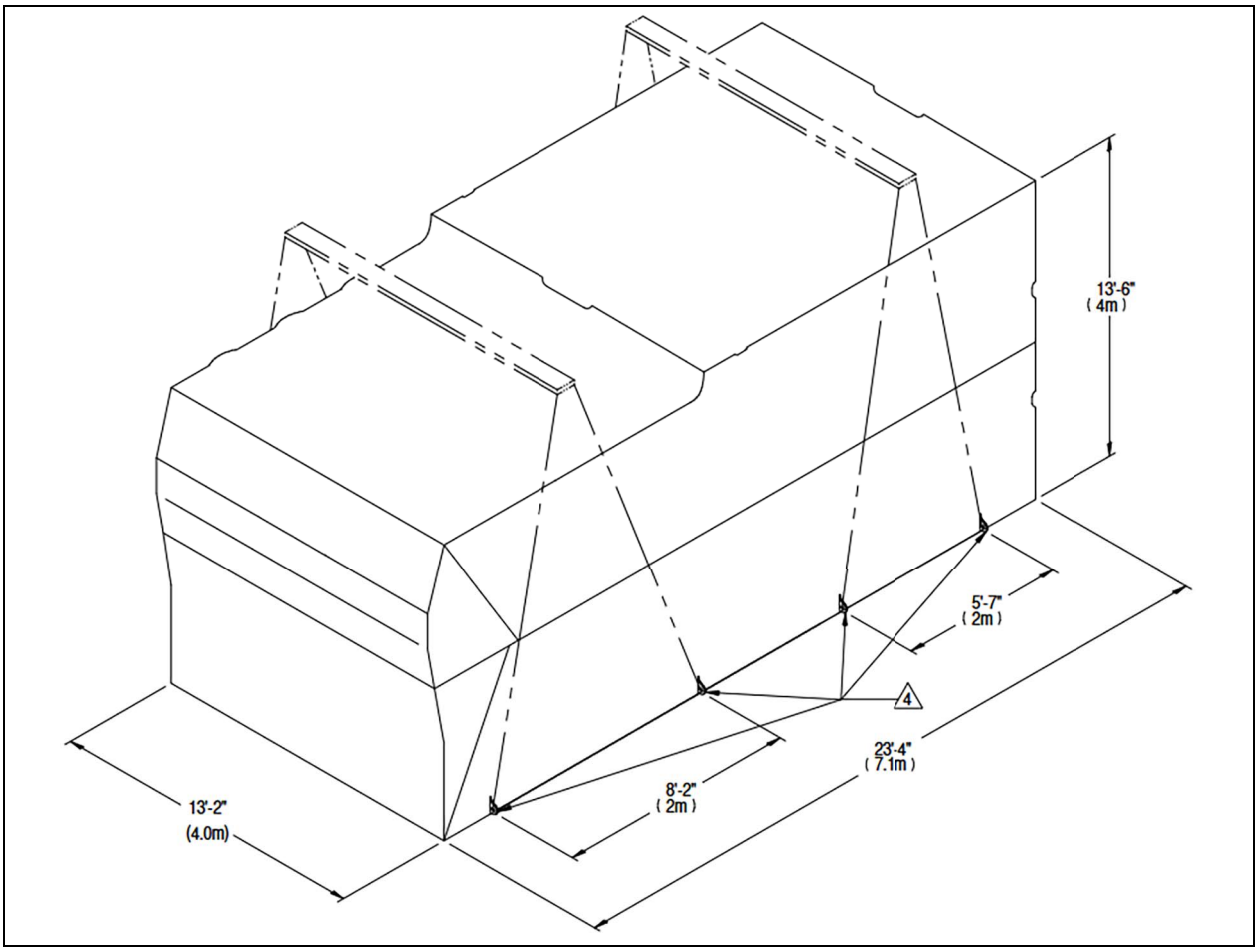

Item	Description
1	Lugs to attach rigging. Typical both sides.

© 2026 Vertiv Group Corp.

All Rights Reserved.

6 Refrigerant Piping and Charging

WARNING! Risk of over-pressurization of the refrigeration system. Can cause explosive discharge of high-pressure refrigerant, loss of refrigerant, environmental pollution, equipment damage, injury, or death. This unit contains fluids and gases under high pressure. Use extreme caution when charging the refrigerant system. Do not pressurize the system higher than the design pressure marked on the unit's nameplate.

WARNING! Risk of explosive discharge of high-pressure refrigerant. Can cause serious injury or death. Building and equipment damage may also result. Neutral and service ports on the compressor service valves do not have a valve core. Front-seat the service valves and relieve pressure from the compressor before loosening a part or a component attached to the service valve. Follow local codes to properly reclaim refrigerant.

CAUTION: Risk of excessive refrigerant line pressure. Can cause tubing and component rupture resulting in equipment damage and personal injury. Do not close off refrigerant-line isolation valve for repairs unless a pressure-relief valve is field-installed in the line between the isolation valve and the check valve. The pressure-relief valve must be rated 5% to 10% higher than the system-design pressure. An increase in ambient temperature can cause the pressure of the isolated refrigerant to rise and exceed the system-design pressure rating (marked on the unit nameplate).

CAUTION: Risk of contact with hot surfaces. Can cause injury. Personal burn injury can be the result of touching a compressor, refrigerant discharge lines, and some electrical components that are extremely hot during unit operation. Allow sufficient time for them to cool to a touch-safe temperature before working within the unit cabinet.

NOTE: Consult local building and plumbing codes for installation requirements of additional pressure relief devices when isolation valves are field installed. Do not isolate any refrigerant circuits from over pressurization protection.

NOTICE

Risk of oil contamination with water. Can cause equipment damage. Refrigerant charge must be weighted into air cooled compressorized systems before they are started. Starting digital scroll compressors without proper refrigerant charging can cause the compressors to operate at less than 5°F (–15°C) evaporator temperature and at less than 52 psig (358 kPa). Operation for extended periods at less than 52 psig (358 kPa) can cause premature compressor failure.

Document Number	Title
20000215	Piping Schematic, 400kW Hybrid Perimeter Unit

© 2026 Vertiv Group Corp.

All Rights Reserved.

NOTICE

Risk of improper refrigerant charging. Can cause equipment damage. Refrigerant charge must be weighted into air-cooled compressorized systems before they are started. Starting digital scroll compressors without proper refrigerant charging can cause the compressors to operate at less than 5°F (–15°C) evaporator temperature and at less than 52 psig (358 kPa). Operation for extended periods at less than 52 psig (358 kPa) can cause premature compressor failure.

6.1 Refrigerant Charge Requirements for Air Cooled Systems

The Vertiv CoolPhase Flex is factory charged. No additional charge or oil should be required, however charge should be verified based on unit superheat. The digital and fixed compressor must both operate for charge verification. The digital compressor must run at 100%.

A steady superheat of 12°F (-11.1°C) to 14°F (-10°C) should be achieved. See Warranty Inspection Check Sheet for detailed instructions.

Table 6.1 below provides the refrigerant charge and oil requirements for the Vertiv CoolPhase Flex.

Table 6.1 DH400 Refrigerant Charge Requirements

Circuit	R410A (lbs)	Additional POE Oil (oz.)
1	80.0	50
2	80.0	50
3	80.0	50
4	92.0	50

© 2026 Vertiv Group Corp.

All Rights Reserved.

6.2 Additional Oil Requirements for Scroll and Digital Scroll Compressors

NOTICE

Risk of improper compressor lubrication. Can cause compressor and refrigerant system damage. Failure to use oil types, viscosities and quantities recommended by the compressor manufacturer may reduce compressor life and void the compressor warranty. See Table 6.2 below for the recommended oil for the system.

- Do not mix polyolestor (POE) and mineral-based oils.
- Do not mix oils of different viscosities.
- Consult your Vertiv sales representative, visit https://www.Vertiv.com/en-us/support/, or contact the compressor manufacturer if questions arise.

Table 6.2 Compressor Type an Oil Type

Compressor Type	Oil Type
Copeland Scroll and Digital Scroll	POE Oil ISO 32 Centistroke Viscosity[1]
[1]Use Copeland POE Oil ULTRA 32-3MAF or other Copeland approved oils. DPN003950, Rev. 5.	

Table 6.3 Additional Oil Required per Refrigerant Charge

Refrigerant System Charge Per Circuit, lb (kg)	Additional Oil Required Per Circuit, oz (ml)
< 40 (18.1)	0
40 (18.1)	10 (300)
50 (22.7)	18 (530)
60 (27.2)	26 (770)
70 (31.8)	34 (1,010)
80 (36.3)	42 (1,240)
90 (40.8)	50 (1,480)
100 (45.4)	58 (1,720)
110 (49.9)	66 (1,950)
120 (54.4)	74 (2,190)
130 (59.0)	82 (2,430)
140 (63.5)	90 (2,660)
150 (68.0)	98 (2,900)
160 (72.6)	106 (3,130)
170 (77.1)	114 (3,370)
180 (81.6)	122 (3,610)

© 2026 Vertiv Group Corp.
All Rights Reserved.

Table 6.3 Additional Oil Required per Refrigerant Charge (continued)

Refrigerant System Charge Per Circuit, lb (kg)	Additional Oil Required Per Circuit, oz (ml)
190 (86.2)	130 (3,840)
200 (90.7)	138 (4,080)
See Table 6.2 on the previous page on the previous page for recommended oil for the system. Source: DPN003950 Rev. 5	

The amount of oil added by field service must be recorded on the tag marked "Oil Added Field Service Record" that is attached to each compressor. The date of oil addition must also be included.

6.2.1 Verifying Additional Oil Charge

1. Using unit manual mode, turn on the fans and operate the compressor/tandem at 100% for 30 minutes.
2. After 30 minutes, exit manual mode and let the compressor/tandem settle for two to three minutes. For tandems, waiting two to three minutes will allow the oil to equalize between the two connected compressors. Oil levels are checked while the tandem/compressor is in an off state to avoid sump turbulence which could show inaccurate levels.
3. Proper oil levels:

   Oil level should be checked in both sight glasses in the tandem and they should be equal.

   The oil level should be between 1/4 and 3/4 of the site glass.

   If the sight glass is completely empty, add oil until the level is at least a 1/4 full. Once the adjustment to the oil level has been made, operate the fans and compressor/tandem at 100% to verify level.
4. Document the amount of oil added or removed on the oil tag attached to the compressor, unit data plate or other applicable location.

6.3 Piping Connection Sizes

Table 6.4 Vertiv™ DH400 Pipe Connections

Connection	Pipe Size OD, Grade 304 SS in.	Connection Type	Qty DH400
Coolant Supply	4	4.0 in. Stainless Steel Flange*	1
Coolant Return	4	4.0 in. Stainless Steel Flange*	1
Coolant Drain/Fill Port	0.75	¾ in. Sanitary Tri Clamp	4
*See submittal drawing 20000223 included in Submittal Drawings on page 99 for additional information.			

© 2026 Vertiv Group Corp.

All Rights Reserved.

6.4 Piping Connection Locations

Refer to submittal drawing 20000223 included in Submittal Drawings on page 99 for coolant supply/return.

Figure 6.1 Coolant Supply/Return

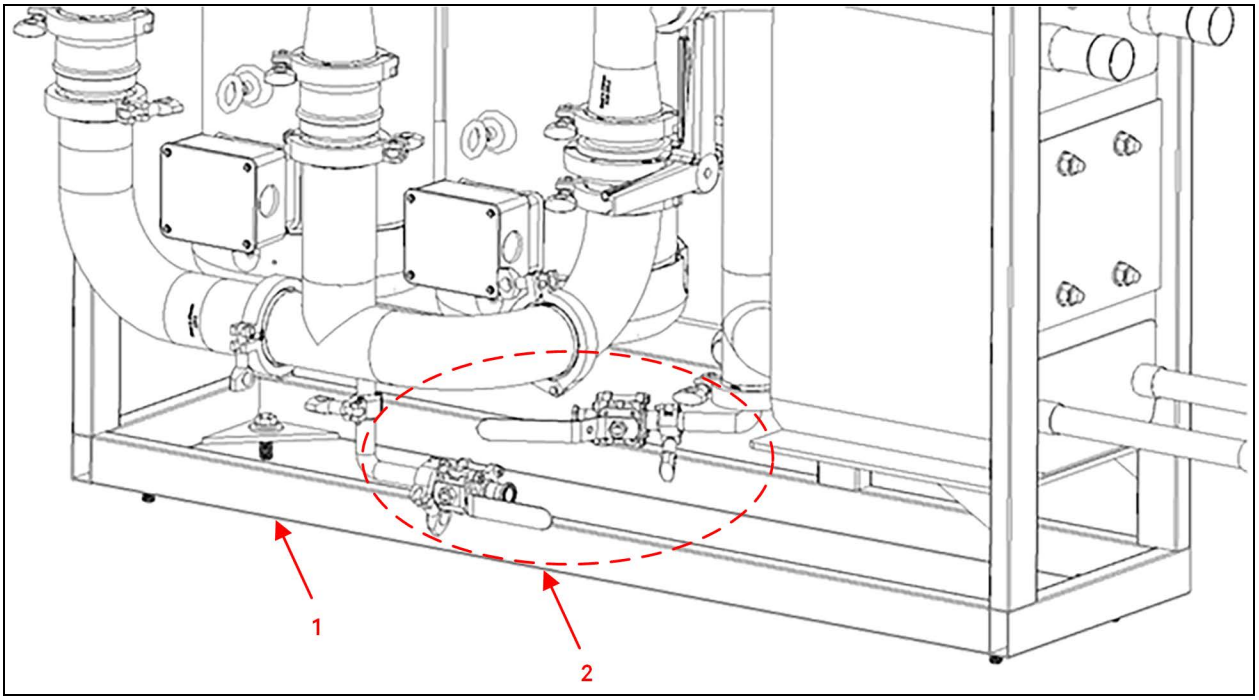

Item	Description
1	Bottom of Liquid Cooling Frame
2	Coolant Drain/Fill Valves

© 2026 Vertiv Group Corp.
All Rights Reserved.

This page intentionally left blank

© 2026 Vertiv Group Corp.

All Rights Reserved.

7 Secondary Fluid Circuit Requirements

Copper water piping must be ASTM Type ACR copper pipe. The Vertiv™ DH400 may be connected to Vertiv™ Liebert® DCD cooling modules with prefabricated piping assembly or rigid, off-the-shelf piping. The cooling modules are connected in parallel between main return and supply pipes going to and from the Vertiv™ DH400.

7.1 Fluid Requirements

See submittal drawing 10025700 included in Submittal Drawings on page 99 to determine if water or a water/glycol mixture is best suited for your application.

7.2 Secondary Fluid Loop Piping Guidelines

CAUTION: Risk of improper piping installation, leak checking, fluid chemistry and fluid maintenance. Can cause injury. Building and equipment damage may also result. Installation and service of this equipment should be done only by qualified personnel who have been specially-trained in the installation of air-conditioning equipment and who are wearing appropriate, OSHA-approved PPE.

NOTICE

Risk of frozen pipes and corrosion from improper coolant mixture. Can cause water leaks resulting in equipment and building damage.

When the cooling unit or piping may be exposed to freezing temperatures, charge the system with the proper percentage of glycol and water for the coldest design ambient temperature. Automotive antifreeze is unacceptable and must NOT be used in any glycol fluid system. Use only HVAC glycol solution that meets the requirements of recommended industry practices. Do not use galvanized pipe.

NOTICE

Risk of piping system corrosion and freezing fluids. Can cause leaks resulting in equipment and very expensive building damage. Piping systems are at risk of freezing and premature corrosion. Fluids in these systems must contain the proper antifreeze and inhibitors to prevent freezing and premature corrosion. The water or water/glycol solution must be analyzed by a competent local water treatment specialist before start-up to establish the inhibitor and antifreeze solution requirement and at regularly scheduled intervals throughout the life of the system to determine the pattern of inhibitor depletion.

The complexity of water and water/glycol solution condition problems and the variations of required treatment programs make it extremely important to obtain the advice of a competent and experienced water treatment specialist and follow a regularly scheduled coolant fluid system maintenance program.

Water chemistry varies greatly by location, as do the required additives, called inhibitors, that reduce the corrosive effect of the fluids on the piping systems and components. The chemistry of the water used must be considered, because water from some sources may contain corrosive elements that reduce the effectiveness of the inhibited formulation. Sediment deposits prevent the formation of a protective oxide layer on the inside of the coolant system components and piping. The water/coolant fluid must be treated and circulating through the system continuously to prevent the buildup of sediment deposits and/or growth of sulfate reducing bacteria.

© 2026 Vertiv Group Corp.

All Rights Reserved.

Proper inhibitor maintenance must be performed in order to prevent corrosion of the system. Consult glycol manufacturer for testing and maintenance of inhibitors.

Commercial ethylene glycol, when pure, is generally less corrosive to the common metals of construction than water itself. It will, however, assume the corrosivity of the water from which it is prepared and may become increasingly corrosive with use if not properly inhibited.

We recommend installing a monitored fluid detection system that is wired to activate the automatic closure of field installed coolant fluid supply and return shut-off valves to reduce the amount of coolant fluid leakage and consequential equipment and building damage. The shut-off valves must be sized to close off against the maximum coolant fluid system pressure in case of a catastrophic fluid leak.

We recommend installing air bleed valves to reduce trapped air in coolant fluid piping circuits, especially long horizontal runs.

NOTICE

Risk of no flow condition. Can cause equipment damage.

Do not leave the water/coolant fluid supply circuit in a continuous no flow condition. Idle fluid allows the collection of sediment that prevents the formation of a protective oxide layer on the inside of tubes. Keep unit switched On and water/coolant fluid supply circuit system operating continuously. In multiple unit teams, allow standby units to enter the rotation automatically or schedule regular manual rotations.

Risk of pump seals taking set could lead to leak due to inactivity. Pumps should be run every three months using the bypass piping provided in the unit.

NOTICE

Risk of leaking chilled water lines. Can cause equipment and building damage.

Lines and joints must be inspected regularly. Improper installation, application and service practices can result in water leakage from the unit. Water leakage can result in severe property damage and loss of critical data center equipment. Do not locate unit directly above any equipment that could sustain water damage.

Vertiv recommends installing monitored leak detection equipment for the unit and supply and return lines.

NOTICE

Risk of a catastrophic water circuit rupture. Can cause expensive building and equipment damage.

Install an overflow drain pan under the unit with a monitored leak detection system in the pan and shutoff valves in the supply and return water lines that automatically close if water is detected by the leak detection system. The shutoff valves should be spring return and must be rated for a close-off pressure that is the same as or higher than the supply water pressure. If it is not possible to install an overflow drain pan, then a monitored leak detection system should be installed in the base of the unit or under the unit to actuate the shutoff valves immediately on a leak detection signal.

The overflow drain pan should have a drain line connected to it that flows to a floor drain or maintenance sink in case of a shutoff valve or leak detection system malfunction.

- Equipment damage and personal injury can result from improper installation, leak checking, fluid chemistry, and fluid maintenance.
- Follow local piping codes and safety codes.

© 2026 Vertiv Group Corp.

All Rights Reserved.

- During brazing, fill lines with flowing nitrogen to prevent excessive oxidation and scale formation inside the piping. Employ prevailing good refrigeration practices for piping supports, leak testing, dehydration, and charging. Failure to do so may result in damage to the system. Refer to the ASHRAE refrigeration handbook for general good practices.
- Qualified personnel must install and inspect system piping.
- Contact a local water consultant regarding water quality, corrosion protection and freeze-protection requirements.
- Manual shut off valves at the supply and return line are included internal to each Vertiv™ DH400 unit.
- Install a monitored fluid detection system that is wired to activate the automatic closure of field installed coolant fluid supply and return shut off valves to reduce the amount of coolant fluid leakage and consequential equipment and building damage. The shut off valves must be sized to close off against the maximum coolant fluid system pressure in case of a catastrophic fluid leak.
- Insulate all piping lines to prevent condensation in applications where the dew point approaches the chilled water temperature.

Refer to specific text and detailed diagrams in this manual for other unit specific piping requirements.

The pipe connections are described in the Submittal Drawings on page 99 .

7.2.1 Flanged Connections

Checking Flange Condition

1. Check the condition of the flange faces for scratches, dirt, and scale.
2. Check for corrosion pitting and tool marks.
3. Inspect the gasket seating surfaces.
4. Check the areas on the flange where the nuts will seat. These areas should be flat and free from pitting and excessive wear.
5. Confirm that the flange is corrosion free and undamaged.

Flange Alignment between Vertiv™ CoolPhase Flex and Field Supplied Flange

1. Visually examine the flange alignment to ensure that an acceptable fit has been obtained.
2. While aligning flanges, make sure that there are no residual stresses in the joint. The use of heat correction for the alignment of flanges is strictly prohibited.
3. Flange faces should be parallel and aligned.
4. The flange bolt holes should be in line so that bolts will pass freely.

Nuts and Bolts Check

1. Visually examine the nuts, studs, and bolts before installation to ensure that they are free from defects such as corrosion and damaged threads. Nuts or bolts with damaged threads should not be used.
2. Check the length of the stud or bolt to avoid short bolting and excessive threads. Flange bolts shall be furnished in a sufficient length to allow use of bolt tensioning equipment or spades, spaces, drip rings and water valves, and the associated extra gaskets.
3. Visually examine studs and nuts after cleaning to ensure that they are free from burrs. Studs and nuts shall be cleaned using a wire brush to remove any dirt on the thread and nuts to flange connection surfaces. Lubricant shall not be used in the gasket and in the gasket seating area.

© 2026 Vertiv Group Corp.
All Rights Reserved.

4. The bolt and nut material grades should be correctly identified before they are used.
5. Bolts and nuts can only be re-used if it is known they have not been overloaded or have not exceeded their yield point.
6. When assembling the nut on the bolt, the nut identification marking must always point outwards.

Gasket Check

1. Do not use sealing compound, grease, or other paste or adhesive on the gasket or flange faces.
2. Do not force the gasket into the seat between the mating flange faces during insertion.
   a. Once the gasket is seated, bring the mating flanges together carefully without shaking the gasket off the seat.
   b. Then install all studs and run up all nuts hand-tight.
3. Visually examine gaskets before installation to ensure that they are free from defects.
4. Color coding shall be maintained per the rate and type of gasket provided by the manufacturer.
5. Clean the gasket seating by using a wire brush.
6. Make sure the material is as specified. Look for any possible defects or damage in the gasket such as folds or creases.
7. Soft material gaskets should be replaced with new ones whenever an opened joint is to be closed again.
8. The full face flange gasket shall only be used once.

Flange Bolt Torque Sequence

Torque bolts and nuts in a cross-cross sequencing using a minimum of three torquing passes and the maximum bolt stress as defined below:

1. Pass 1: Torque to a maximum of 30% of the final torque value in accordance with the torque sequence. Check that the gasket is getting compressed uniformly.
2. Pass 2: Torque to a maximum of 60% of final torque value.
3. Pass 3: Torque to the final torque value (100%).

After the three basic torque passes are completed, repeat torquing the nuts until at least once using the final torque in a cross-cross manner until no further rotation of the nut is observed. Tighten to 1/2 turn past snug.

Field flange connection to the Vertiv CoolPhase Flex unit must be installed in accordance with local codes and best industry practice.

7.2.2 Pressure Drop for Liquid Cooling Loop

Available external pressure drop for water systems is at minimum 44 psi (303.4 kPa).

Available external pressure drop for PG25 systems is at minimum 42 psi (289.6 kPa).

For other fluid types, please contact Vertiv.

If using a Vertiv™ XDU, please refer to the respective XDU manual.

© 2026 Vertiv Group Corp.
All Rights Reserved.

7.2.3 Fluid Volume for Unit and Connection Piping

The following tables provide the fluid volume requirements for the Vertiv CoolPhase Flex and connected piping/hosing.

Table 7.1 Volume of Unit Internal Fluid Circuit

Unit Model	Fluid Volume, gal. (L)
DH400	20 (75.71) [estimate]

7.2.4 Field Piping Connection Volumes

Field supplied, field installed piping (PVC, copper, etc.) depends on pipe diameter and length. Table 7.2 below describes the typical fluid volumes depending on pipe diameter.

NOTE: If total fluid system volume per Vertiv CoolPhase Flex is over 95 gallons for glycol (40% or less), or 175 gallons for water, a system thermal expansion tank is required. Size per expansion tank manufacturer recommendation.

Table 7.2 Piping Fluid Volume Gallon per Foot (Liter per Meter) Reference Type L Copper

Line Size, OD, in.	Fluid Volumes	
	gal/ft	l/m
2-1/2	0.25	3.105
3	0.35	4.347
3-1/2	0.48	5.961
4	0.62	7.699

Wetted Materials List

- 304 and 316 stainless steel
- Buna-N and FKM gaskets
- Chrome plated brass

7.2.5 Air Bleeders

Install air bleeders at each high point in the piping circuits. You will need to “bump” the pump after the system is filled with fluid to help remove the air. Also plan in an air separator or other means to easily remove air from the data center piping loop. Failure to do so will cause delays during start-up.

© 2026 Vertiv Group Corp.

All Rights Reserved.

7.2.6 Secondary Fluid Flow Considerations

Secondary fluid flow should be maintained between the values of 25 gpm (minimum) and 170 gpm (maximum) per module.

Refer to individual cooling module specifications to estimate the maximum combined allowable flow for all units connected to the Vertiv CoolPhase Flex. If the allowable combined flow rate is less than 25 gpm (5.8 m^3/h) per DH400 module, adjust bypass valves (field provided) as necessary to maintain a flow above 25 gpm (5.8 m^3/h) through the Vertiv CoolPhase Flex.

7.3 Fluid Quality Requirements

To safeguard the maximum lifetime of the chilled water system, the water used for cooling purposes must meet the VGB Cooling Water Guidelines (VGB-R 455 P). The cooling water used must be soft enough to prevent deposits, but it must not be too soft because that would lead to corrosion in the water system.

Water/glycol solutions have different requirements. As stated in the notice in Secondary Fluid Circuit Requirements on page 35 a local water treatment specialist could be consulted.

Table 7.3 below , lists the most important impurities and measures for their removal.

Table 7.3 Water Impurity

Water Impurity or Condition	Corrective Method
Particles (dp < 0.3 mm)	Filter the water.
Excessive hardness	Soften the water by ion exchange.
Moderate level of particles and hardeners	Add dispersion or stabilization agents.
Moderate level of chemical impurities	Add deadening agents and inhibitors.
Biological impurities (bacteria and algae)	Add biocides.

Table 7.4 Hydrological Data

Hydrological Data	Water Quality for CoolPhase (Secondary Side)	Units
pH	7.5 to 9	
Sulfate ions (SO_4^{-2})	<70	ppm
HCO3- / SO_4^{-2}	>10	ppm
Total Hardness	4- 8.5	°dH
Chloride ions (Cl-)	<50	ppm
Phosphate ions (PO_{-4})	<2.0	ppm
Ammonia (NH_3)	<0.5	ppm
Free Chlorine (Cl_2)	<0.5	ppm
Iron (Fe)	<0.2	ppm
Manganese (Mn)	<0.05	ppm
Carbon Dioxide (CO2)	<5	ppm
Hydrogen Sulfide (H_2S)	<0.05	ppm

© 2026 Vertiv Group Corp.
All Rights Reserved.

Table 7.4 Hydrological Data (continued)

Hydrological Data	Water Quality for CoolPhase (Secondary Side)	Units
Oxygen (O_2)	<0.1	ppm
Solids	<1500	mg/L
Elec. Conductivity	50 to 500	MicroS/cm

7.4 Filling Secondary Fluid Circuit

The piping must be filled prior to operating the pumps to avoid damage to the pump and pump seals. The pump seals are cooled and hydrodynamically lubricated by the system fluid.

NOTE: Fill valves are located at the bottom of the liquid cooling section of the unit (refer to Figure 7.1 below) A threaded hose adapter will be included in the unit. Fill piping may be from a city water feed, or from a transfer pump connection for applications with fluid pre-mix.

When filling, bleed air from all vent locations until a steady stream of fluid is observed. Vent locations are provided as 1/4" SAE flare connections at various points in the factory piping of the Vertiv CoolPhase Flex. Vent locations should be provided at high points and long horizontal runs of the field piping as well.

Figure 7.1 Fill Valve and Vent Location

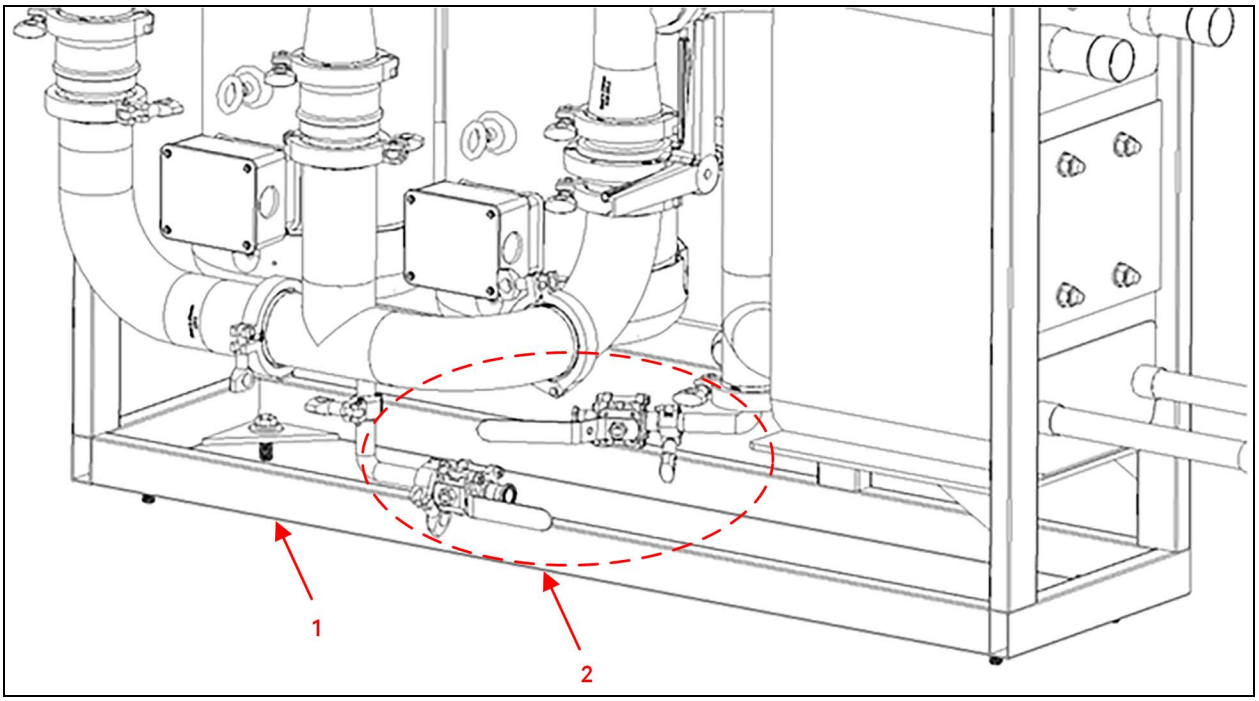

Item	Description
1	Bottom of Liquid Cooling Frame
2	Coolant Drain/Fill Valves

© 2026 Vertiv Group Corp.
All Rights Reserved.

Test the fluid quality when filling the system. Refer to Fluid Quality Requirements on page 40 .

To fill the system:

1. Locate fill connection in Vertiv CoolPhase Flex module.
2. Connect the fill water source to the desired fill valve. Open high point vents where appropriate.
3. Turn on the water fill source. Allow it to run until all of the air is purged from the hose connected to the high point vents. Failure to properly purge the air will result in pump cavitation and premature pump failure.

NOTE: Vertiv CoolPhase Flex Controls will cause the unit to stop operation if enough air remains in the piping. This will show up as a "Loss of Flow" warning.

4. Close air vents when purged or return auto air-vents to specified position (open/closed) according to field piping design. Allow water fill pressures to stabilize. The unit fill volume is listed in Table 7.1 on page 39 .
5. With the unit in manual mode, turn pump(s) on for a few seconds at a time initially, resting for a minute or so between cycles, to get trapped air to move to the high points. Add additional fluid volume as needed to get a stagnant pressure of 20 psig (137.9 kPa).

NOTE: A higher stagnant pressure (i.e. over 30 psig) results in a higher pump discharge pressure. Initial stagnant pressure will need to be balanced with maximum supply pressure allowed (not to exceed 100 psig [689.5 kPa]).

6. Check the pump inlet fluid pressure. Pump must be able to run at maximum pump speed for desired differential pressure and/or flow rate with inlet pressure no lower than 4 psi (27.6 kPa). Pump inlet pressure can be checked from the Vertiv Liebert iCOM screen. Refer to the Vertiv Liebert iCOM User Manuals.

It may be necessary to repeat the fill steps after the pump(s) have run to remove trapped air from the system.

NOTE: Manual mode will time out after 30 minutes.

7.4.1 Leak Check before Commission and Operation

NOTICE

Risk of leaking fluid. Can cause equipment damage and serious building damage. Check the cooling fluid system for leaks before commissioning. Check the fluid pipe connection to the heat exchanger and inspect the mechanical condition of the cooling fluid circuit and connections thoroughly.

To check for leaks:

1. Confirm that the flow directions of field installed components are correct.
2. Confirm that all isolating valves are open.
3. The fluid system in the Vertiv CoolPhase Flex is factory checked for leaks and may be shipped with an inert gas holding charge. At installation, check all fluid circuits for leaks.
4. Repair any leaks.

NOTE: We recommend isolating the unit with field installed shut off valves during leak checking of field installed piping. When the units are included in a leak test, use of fluid for pressure testing is recommended. When pressurized gas is used for leak testing the unit, the maximum recommended pressure is 30 psig (207 kPa) and tightness of the unit would be verified by pressure decay over time (<2 psig/hour [13.8 kPa/hour]) or sensing a tracer gas with suitable instrumentation. Dry seals in fluid valves and pumps may not hold a high gas pressure.

© 2026 Vertiv Group Corp.
All Rights Reserved.

8 Electrical Field Connections

Three-phase electrical service is required for all models. Electrical service must conform to national and local electrical codes. Refer to equipment nameplate regarding wire size and circuit protection requirements. Refer to the appropriate submittal drawing, listed in Table 8.1 on the next page , for electrical service entrances into unit.

A manual electrical disconnect switch should be installed in accordance with local codes and distribution system. Consult local codes for external disconnect requirements.

WARNING! Arc flash and electric shock hazard. Open all local and remote electric power-supply disconnect switches, verify with a voltmeter that power is Off and wear appropriate, OSHA-approved personal protective equipment (PPE) per NFPA 70E before working within the electric control enclosure. Failure to comply can cause serious injury or death. Customer must provide earth ground to unit, per NEC, CEC and local codes, as applicable. Before proceeding with installation, read all instructions, verify that all the parts are included and check the nameplate to be sure the voltage matches available utility power. The Vertiv Liebert iCOM controller does not isolate power from the unit, even in the "Unit Off" mode. Some internal components require and receive power even during the "Unit Off" mode of the Vertiv Liebert iCOM controller. The factory-supplied disconnect switch is inside the unit. The line side of this switch contains live high voltage. The only way to ensure that there is NO voltage inside the unit is to install and open a remote disconnect switch. Refer to unit electrical schematic. Follow all local codes.

WARNING! Risk of electric shock. Can cause equipment damage, injury or death. Open all local and remote electric power supply disconnect switches and verify with a voltmeter that power is off before working within any electric connection enclosures. Service and maintenance work must be performed only by properly trained and qualified personnel and in accordance with applicable regulations and manufacturers' specifications. Opening or removing the covers to any equipment may expose personnel to lethal voltages within the unit even when it is apparently not operating and the input wiring is disconnected from the electrical source.

WARNING! Risk of improper wire sizing/rating and loose electrical connections. Can cause overheated wire and electrical connection terminals resulting in smoke, fire, equipment and building damage, injury or death. Use correctly sized copper wire only and verify that all electrical connections are tight before turning power On. Check all electrical connections periodically and tighten as necessary.

WARNING! Risk of wiring damage, short circuits and electric shock. Can cause overheated wiring, smoke, fire, activation of fire suppression systems and EMS personnel and equipment, building and equipment damage, injury or death. Insert CSA certified or UL listed bushings into holes and or knockouts used to route wiring through metal panels to protect the wire insulation from contact with sheet metal edges.

© 2026 Vertiv Group Corp.

All Rights Reserved.

NOTICE

Risk of improper power-supply connection. Can cause equipment damage and loss of warranty coverage.

Prior to connecting any equipment to a main or alternate power source (for example: back-up generator systems) for start-up, commissioning, testing, or normal operation, ensure that these sources are correctly adjusted to the nameplate voltage and frequency of all equipment to be connected. In general, power-source voltages should be stabilized and regulated to within ±10% of the load nameplate nominal voltage. Also, ensure that no three-phase sources are single-phased at any time.

NOTICE

Risk of improper electrical connection of three-phase input power. Can cause backward compressor rotation and unit damage. Service technicians should use a gauge set on the system during the initial start up to verify that the three-phase power is connected properly. The EC fans are not a reliable indicator of proper connection. The blowers will rotate the same direction, regardless of the three-phase power input. Three-phase power must be connected to the unit line voltage terminals in the proper sequence so that the compressors rotate in the proper direction. Incoming power must be properly phased to prevent compressors from running backward. We recommend checking the unit's phasing with proper instrumentation to ensure that power connections were made correctly. We also recommend verifying discharge and suction pressures during start up to ensure that the compressors are running in the correct direction.

See transformer label for primary tap connections. Installer will need to change transformer primary taps if applied unit voltage is other than pre-wired tap voltage.

NOTE: Use water-tight fittings for all electrical connections. Failure to do so risks damage to the outdoor unit.

The unit requires three separate power-supply connections:

- A 3-phase, 460-V power supply to the Vertiv CoolPhase Flex unit electrical enclosure or ATS
- The following circuits are factory jumpered together to allow powering from a single 40 amp maximum supply. If the jumpers are removed they can be powered individually from two separate 20 amp supplies.
  - A 120V 20A utility connection for lights and electrical enclosure heaters and fans
  - A 120V 20A service outlet connection

The electrical connections are described in the submittal documents included in the Submittal Drawings on page 99 . The low-voltage connections are further detailed in Figure 8.1 on the facing page .

The following table lists the relevant documents by number and title.

Table 8.1 Electrical Field Connection Drawings

Document Number	Title
20000118	Electrical Field Connections
20000202, Page 2	Component Location Diagram 400kW Hybrid Perimeter Unit
20000214	Electrical Field Connections 400kW Hybrid Perimeter Unit

© 2026 Vertiv Group Corp.

All Rights Reserved.

Figure 8.1 Low Voltage BMS Wiring to Unit in Main Electrical Enclosure

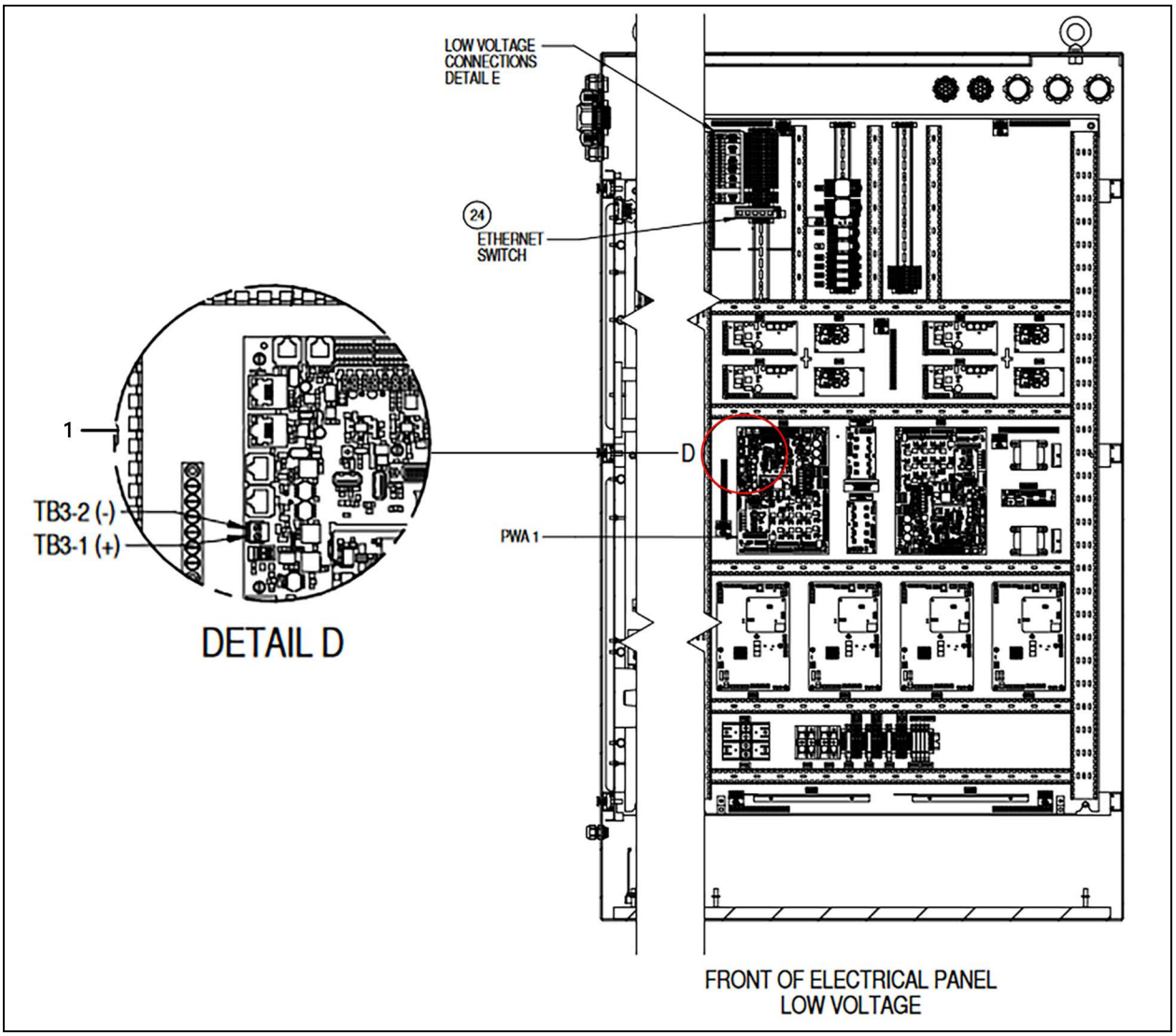

Item	Description
1	Location of Vertiv™ Liebert® IntelliSlot™ Unity card in the Vertiv CoolPhase Flex main electrical enclosure for low voltage BMS wiring.

© 2026 Vertiv Group Corp.
All Rights Reserved.

Figure 8.2 Location of Vertiv™ Liebert® iCOM™ Primary Board

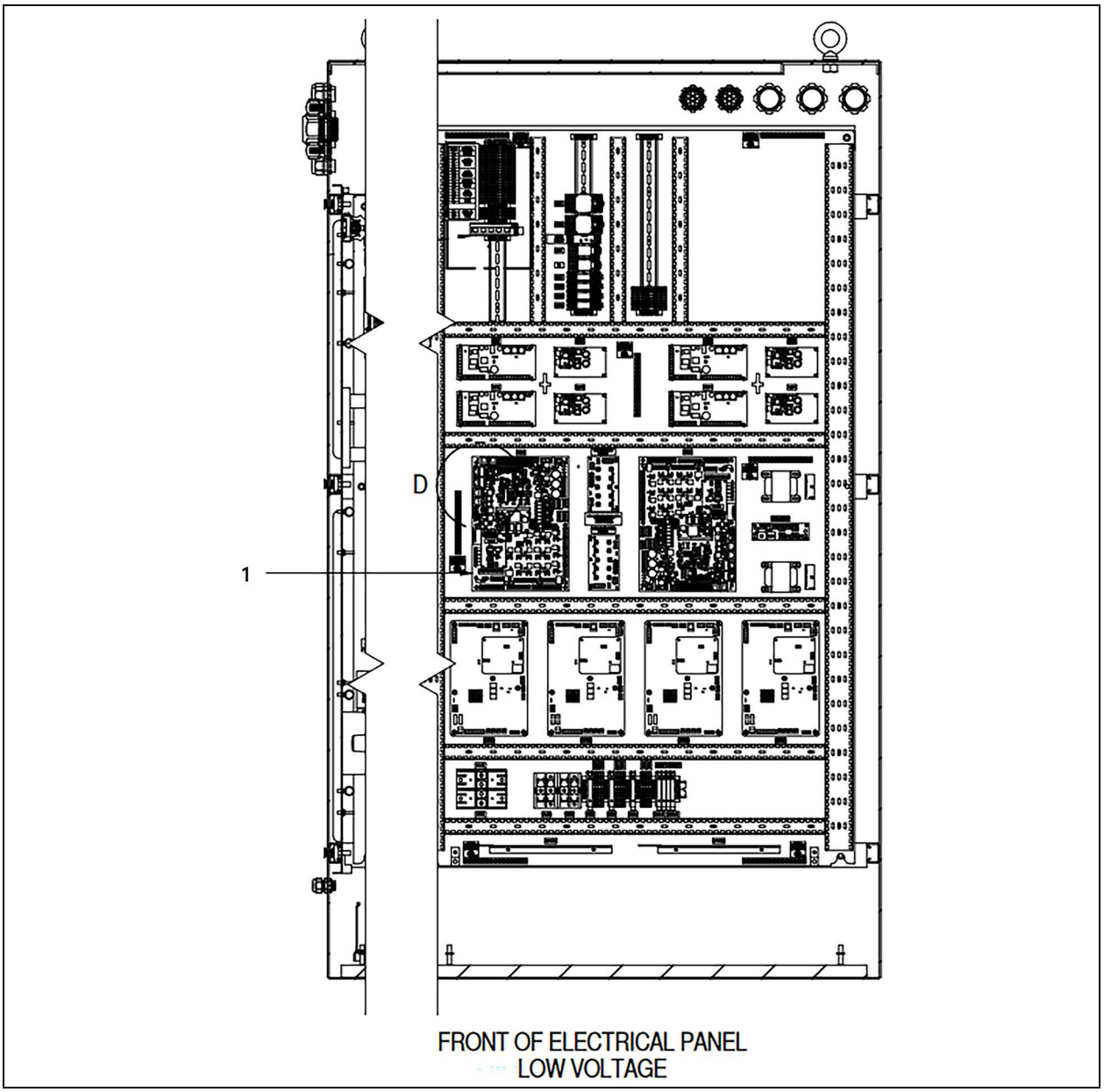

Item	Description
1	Vertiv Liebert iCOM primary control board

© 2026 Vertiv Group Corp.
All Rights Reserved.

Figure 8.3 Vertiv™ Liebert® vNSA, BMS, and 2T CANbus Remote Sensor Connections

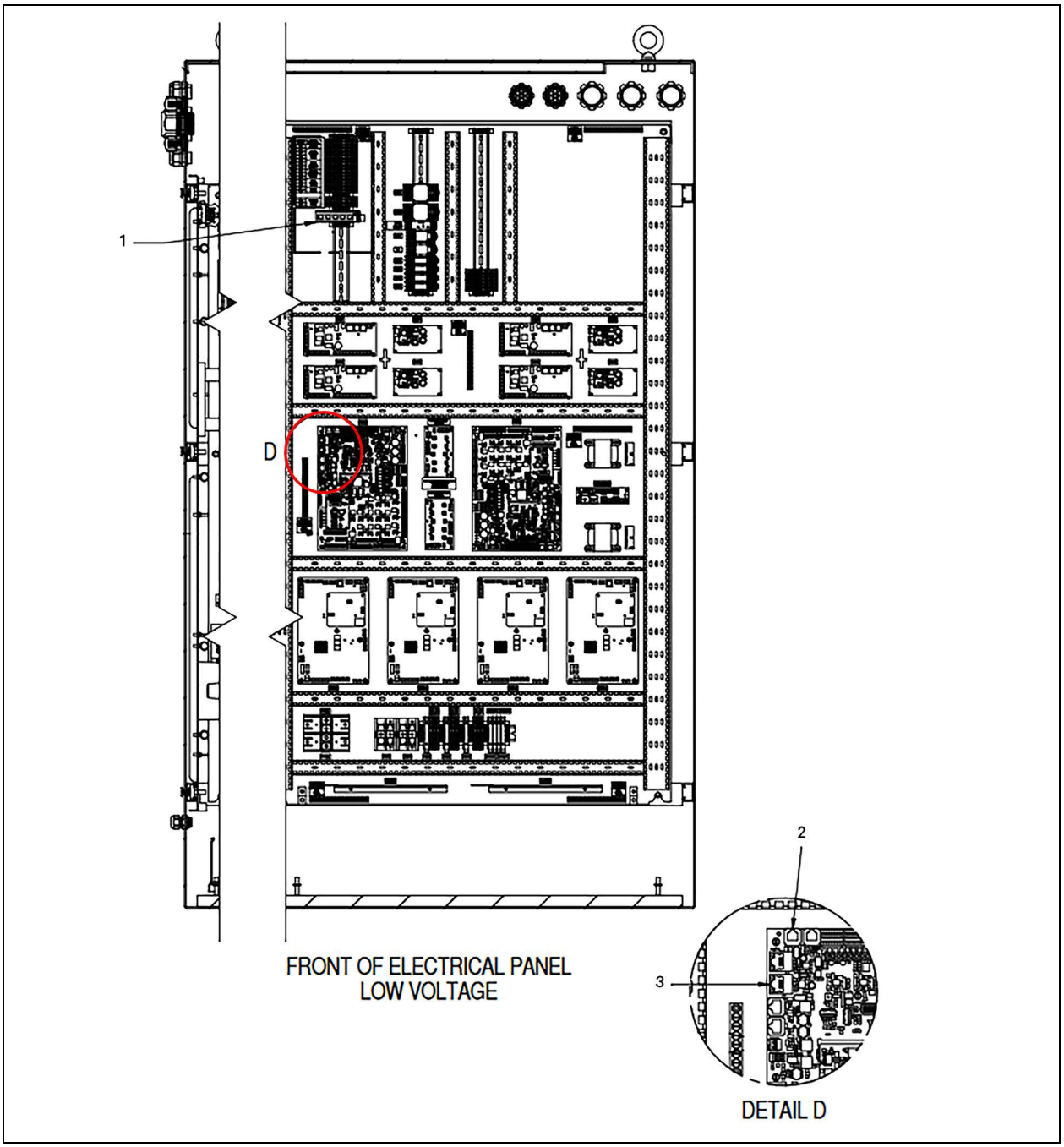

Item	Description
1	Location of Ethernet unit to unit connection from Vertiv Liebert vNSA network switch
2	Location of the 2T CANbus remote sensor connection
3	Location of Ethernet BMS connection

© 2026 Vertiv Group Corp.
All Rights Reserved.

© 2026 Vertiv Group Corp.

All Rights Reserved.

9 Checklist for Completed Installation

9.1 Moving and Placing Equipment

1. Unpack and check received material.
2. Proper clearance for service access has been maintained around the equipment.
3. Equipment is level and mounting fasteners are tight.
4. Proper evaporator drip pan cleanout system is in place.

9.2 Electrical Installation Checks

1. Supply voltage and phase matches equipment nameplate.
2. Power wiring connections completed to the disconnect switch.
3. Power line circuit breakers or fuses have proper ratings for equipment installed.
4. All internal and external high- and low-voltage wiring connections are tight.
5. Confirm that unit is properly grounded to an earth ground.
6. Control transformer setting matches incoming power.
7. Electrical service conforms to national and local codes.
8. Confirm that power-wiring connections to the utility box are completed.

9.3 Other Installation Checks

1. Ducting complete.
2. Confirm ducting is attached to unit and building structure, and any openings around supply- and return-duct connections are sealed.
3. Filters installed.
4. Check fasteners that secure evaporator-fan motors—some may have become loose during shipment.
5. All fans are free of debris.
6. Seal openings around electrical connections and make sure that the seals are water-tight.
7. Installation materials and tools have been removed from equipment (literature, shipping materials, construction materials, tools, etc.).
8. Check for refrigerant leaks.

© 2026 Vertiv Group Corp.
All Rights Reserved.

9.4 BMS and Sensor Installation Checks

1. CAT5 cables are installed from each unit and the network switch, and all cables have RJ45 jacks on each end.
2. The network switch/Vertiv Liebert vNSA panel (if present) is installed and powered.
3. Confirm the static-pressure-sensor transducer (if present) is installed in the room and wired back to the Vertiv CoolPhase Flex unit.
4. Confirm the supply-air sensor is installed in the best location possible to obtain a temperature reading representative of the supply air in the duct or plenum serviced by the unit and that the sensor is wired back to the unit control panel.
5. All remote and 2T rack sensors (if present) are installed and wired using CANBUS cables.

9.5 Vertiv™ Liebert® APM2 UPS

The Vertiv Liebert APM2 provides continuous, high quality AC power to business-critical equipment, such as telecommunications and data processing equipment. The Vertiv Liebert APM2 supplies power free of the disturbances and variations in voltage and frequency common to utility power, which is subject to brownouts, blackouts, surges, and sags.

The Vertiv Liebert APM2 utilizes the latest in high frequency, double conversion pulse width modulation technology and fully digital controls to enhance its reliability and increase the ease of use.

The Vertiv Liebert APM2 requires internal or external batteries to support the load when utility power is not present.

1. Review the Vertiv™ Liebert® APM2 User Manual, SL-71938.
2. Follow preparation described in manual.

9.6 Refrigerant Leak Mitigation

For information regarding the Refrigerant Leak Detection system, Mitigation Mode, and testing procedures, refer to Diagnosing Refrigerant Leak Detection Issues in the Vertiv™ Liebert® iCOM™ Installer/User Guide SL-80185.

Table 9.1 Fan Speed Setting for Refrigerant Leak Mitigation

Unit	Cooling Type	Qmin Mitigation Setting	Equivalent % Fan Speed for Qmin Mitigation Setting
DH400 Air Cooling	Air	6460	10%
DH400 Liquid Cooling	Air	6460	10%
Source: 20000578, Rev. A			

© 2026 Vertiv Group Corp.

All Rights Reserved.

10 Initial Start-up Checks and Commissioning Procedure for Warranty Inspection

WARNING! Arc flash and electric shock hazard. Open all local and remote electric power-supply disconnect switches, verify with a voltmeter that power is Off and wear appropriate, OSHA-approved personal protective equipment (PPE) per NFPA 70E before working within the electric control enclosure. Failure to comply can cause serious injury or death. Customer must provide earth ground to unit, per NEC, CEC and local codes, as applicable. Before proceeding with installation, read all instructions, verify that all the parts are included and check the nameplate to be sure the voltage matches available utility power. The Vertiv Liebert iCOM controller does not isolate power from the unit, even in the "Unit Off" mode. Some internal components require and receive power even during the "Unit Off" mode of the Vertiv Liebert iCOM controller. The factory-supplied disconnect switch is inside the unit. The line side of this switch contains live high-voltage. The only way to ensure that there is NO voltage inside the unit is to install and open a remote disconnect switch. Refer to unit electrical schematic. Follow all local codes.

WARNING! Risk of improper wiring, piping, moving, lifting and handling. Can cause equipment damage, serious injury or death. Installation and service of this equipment should be done only by qualified personnel who have been specially-trained in the installation of air-conditioning equipment and who are wearing appropriate, OSHA-approved PPE.

NOTICE

Risk of improper electrical connection of three-phase input power. Can cause backward compressor rotation and unit damage. Service technicians should use a gauge set on the system during the initial start up to verify that the three-phase power is connected properly. The EC fans are not a reliable indicator of proper connection. The blowers will rotate the same direction, regardless of the three-phase power input. Three-phase power must be connected to the unit line voltage terminals in the proper sequence so that the compressors rotate in the proper direction. Incoming power must be properly phased to prevent compressors from running backward. We recommend checking the unit's phasing with proper instrumentation to ensure that power connections were made correctly. We also recommend verifying discharge and suction pressures during start up to ensure that the compressors are running in the correct direction.

- Confirm that all items on Checklist for Completed Installation on page 49 have been done.
- Locate "Vertiv CoolPhase Flex Warranty Inspection Check Sheet" in the unit's electric panel.
- Complete "Vertiv CoolPhase Flex Warranty Inspection Check Sheet" during start-up.
- Forward the completed "Vertiv CoolPhase Flex Warranty Inspection Check Sheet" to your local sales office. This information must be completed and forwarded to validate warranty.
- Contact your local sales representative or technical support if you have any questions or problems during unit start-up and commissioning. Visit https://www.Vertiv.com/en-us/support/ or call 1-800-543-2778 for contacts.

© 2026 Vertiv Group Corp.

All Rights Reserved.

10.1 Converting the Cooling Operation: Air to Liquid/Liquid to Air

The following process must be completed to convert the DH400 from either Air Cooling mode to Liquid Cooling mode or Liquid Cooling mode to Air Cooling mode.

10.1.1 Refrigerant Migration Control

Air to Liquid Cooling Conversion

1. Run the unit in Manual Mode with compressors ON at 100% (single circuit or all circuits), and evaporator fans or liquid cooling pump at 100%.
   - Switching from air cooling to liquid cooling, run the evaporator fans at 100%.
   - Switching from liquid cooling to air cooling, run the liquid cooling pump at 100%.
   - During this time, it is recommended to have a minimum amount of load on to prevent the unit cutting out on low suction pressure.
2. Allow each circuit's SH to stabilize to ensure that the evaporator and suction lines are filled with 2-phase refrigerant – minimum 20 minutes.
3. Turn OFF each of the compressor circuits and evaporator fans.
   - Each of the EEVs will close when the compressors are turned off.
4. Adjust the ball valves on each circuit to correctly route flow for the desired cooling configuration. Perform quickly after turning off the unit.

Figure 10.1 3-Way Ball Valve Option

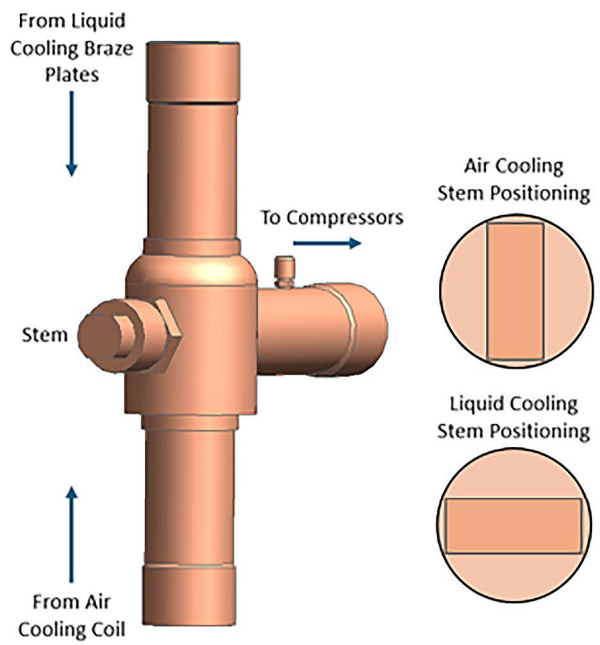

© 2026 Vertiv Group Corp.
All Rights Reserved.

- 2-way ball valve option:
  - When switching from air cooling to liquid cooling, the 2-way ball valve associated with the air cooling coil must be turned 90° to close. Once closed, the 2-way ball valve associated with the liquid cooling braze plates must be turned 90° to open.
  - When switching from liquid cooling to air cooling, the 2-way ball valve associated with the liquid cooling braze plates must be turned 90° to close. Once closed, the 2-way ball valve associated with the air cooling coil must be turned 90° to open.

Figure 10.2 2-Way Ball Valve Option

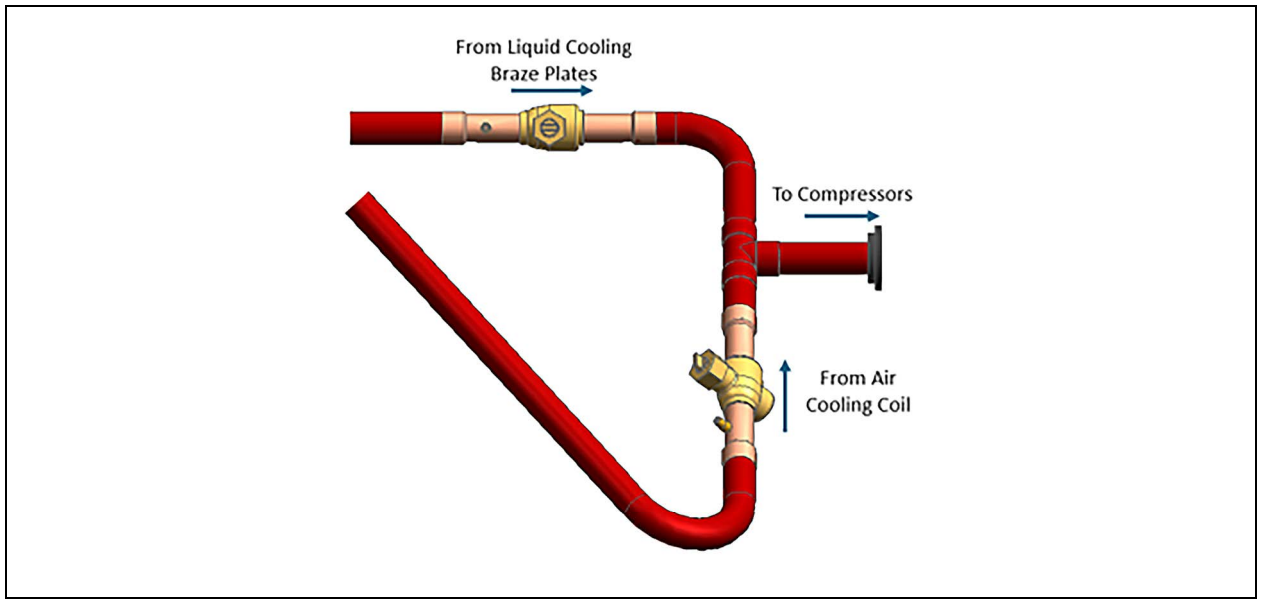

10.1.2 Wiring and Software

1. With the unit powered OFF, disconnect each of the four EEV wire harnesses from the EEV coils, and connect the harnesses to the desired EEVs, being careful to line up the connection pins and match C1 to C1, C2 to C2, etc. See the submittal drawing 60177801 included in Submittal Drawings on page 99 for more detail).
2. With the Vertiv Liebert iCOM powered ON, unlock the iCOM display to the Service level.
   - Navigate to Service -> BMS & Teamwork -> U2U Setup and define a new U2U group for each group of DH400's connected.
     - All units in a U2U group must be in the same operating mode – liquid cooling units in one group, air cooling units in a separate group.
   - Navigate to the Advanced menu and change the DH Hybrid Mode toggle to the desire cooling method. Then click Save.
3. Configure any setpoints:
   - Liquid Cooling Operation: supply water temp, indoor pump DP/flow rate.
   - Air Cooling Operation: supply/return air temp., etc.

© 2026 Vertiv Group Corp.

All Rights Reserved.

10.1.3 Additional Setup and Install

Liquid to Air Cooling Conversion

- If the system is in Air Cooling mode for an extended period, it is recommended to leave water in the liquid cooling section (initial install or conversion).
  - Vertiv supplied U-bend connection can be reinstalled at the unit customer connections to limit water in the system. See Figure 10.3 below .

Figure 10.3 U-bend Connection

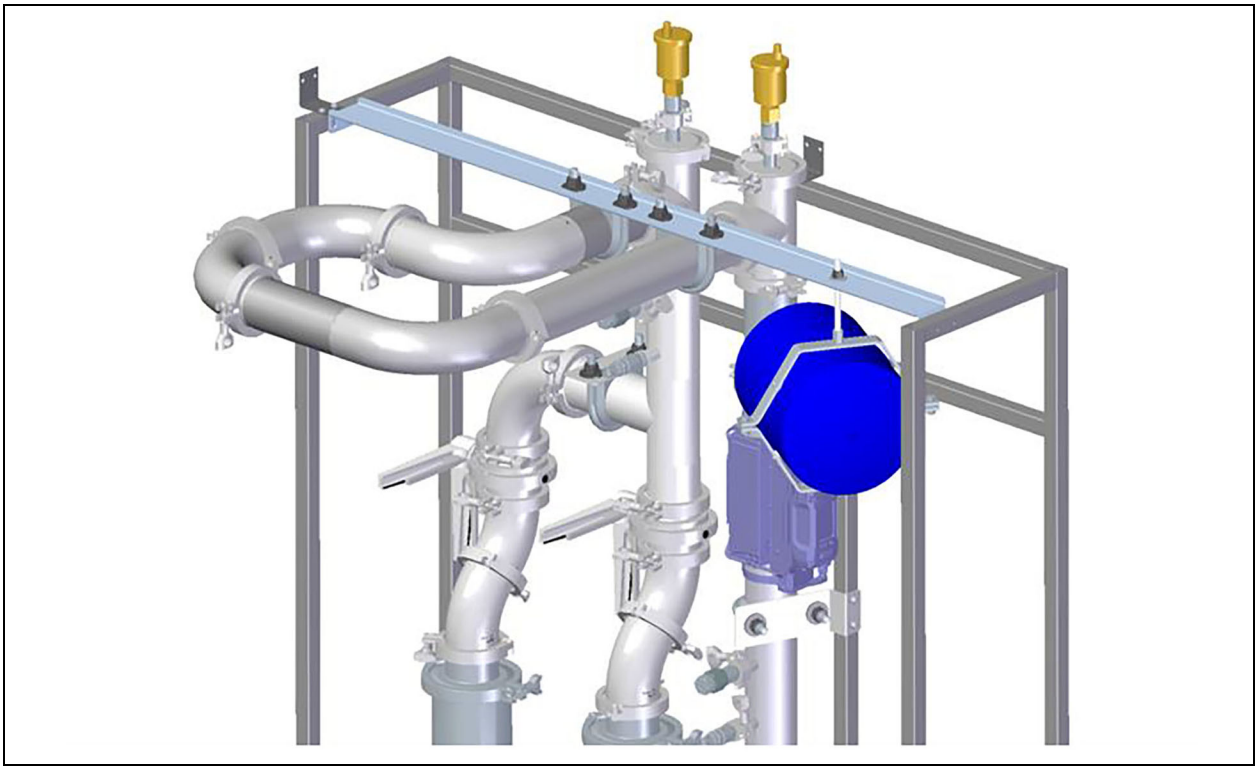

  - This will allow the controls to routinely cycle water to exercise the pumps and prevent bacteria growth.
  - Butterfly valves should remain open to allow water to fully cycle through the unit.
- Configure the UPS for air-cooling mode. See Vertiv™ Liebert® APM2 User Manual, SL-71938, for additional detail.
  - The Vertiv Liebert APM2 UPS requires changes to the parameter configuration and installation of battery strings. These updates should be performed by Vertiv qualified personnel.

WARNING! Load will be dropped during a utility power loss event.

© 2026 Vertiv Group Corp.

All Rights Reserved.

Air to Liquid Cooling Conversion

1. Install Vertiv supplied customer connections and remaining piping. See **Figure 10.4** below .

Figure 10.4 Piping

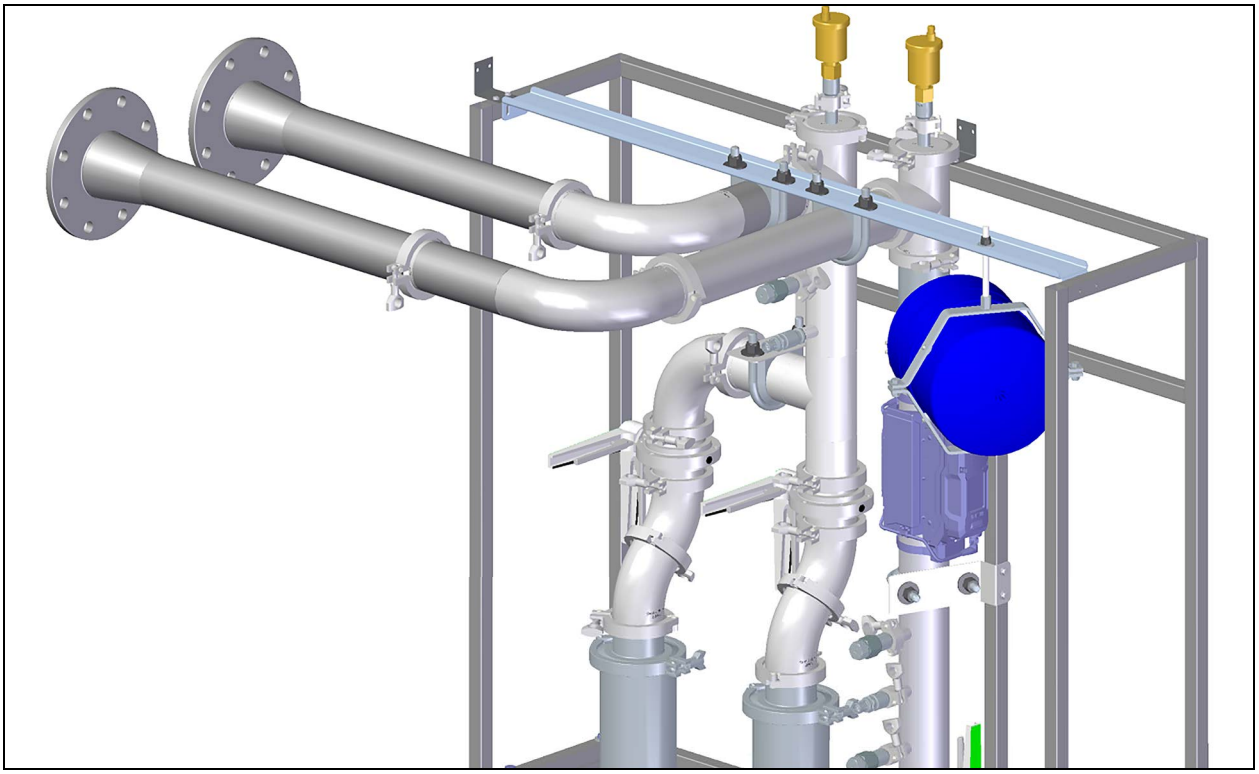

2. Ensure all butterfly valves are open and fill the system with water.
   - System should see a stagnant water pressure of at least 25 psig.
   - Manually run the liquid cooling pump to cycle the water through the filters.
   - It is recommended to use a filter exterior to the ones in the unit while cleaning out the system.
   - Only using the filters built into the unit will require the installer to clean them multiple times.
3. Configure the UPS for liquid-cooling mode. See Vertiv™ Liebert® APM2 User Manual, SL-71938, for additional detail.
   - The Vertiv Liebert APM2 UPS requires changes to the parameter configuration and installation of battery strings. These updates should be performed by Vertiv qualified personnel.
   - Turn ON battery breakers.
     - Batteries must be closed for the UPS to support load during a utility power loss event.

© 2026 Vertiv Group Corp.

All Rights Reserved.

10.1.4 Charge Adjustment

1. Turn the unit On in Auto Mode, the unit will ramp to meet the setpoint.
2. Allow unit to stabilize while monitoring receiver sight glass, superheat, sub-cool, and pressures for each circuit. – minimum 20 minutes.

Air Cooling Setup:

1. Add or remove charge as needed to have each circuit charged just above halfway in the receivers.
2. Remove charge from each circuits isolated liquid cooling braze plate loop until pressure reaches 110 ± 10 psig. This will prevent any migration while operating in cold ambient conditions.

Liquid Cooling Setup:

1. Add/remove charge to each circuit as needed to target the following subcooling values in the liquid line upstream of the liquid cooling EEVs.

NOTE: This will require filling up the receivers fully.

2. Remove charge from each circuits isolated air cooling evaporator coil loop until pressure reaches 110 ± 10 psig. This will prevent any migration while operating in cold ambient conditions.

Table 10.1 Target Subcooling at Outdoor Temperature

Outdoor Ambient		Subcooling	
°F	°C	°F	°C
-30	-34.4	10	5.6
-15	-26.1	10	5.6
0	-17.8	10	5.6
15	-9.4	10	5.6
30	-1.1	10	5.6
45	7.2	10	5.6
60	15.6	10	5.6
75	23.9	10	5.6
85	29.4	12	6.7
95	35.0	12	6.7
105	40.6	14	7.8
115	46.1	16	8.9
120	48.9	18	10.0
Subcooling should be within ± 3°F (1.7°C)			

© 2026 Vertiv Group Corp.

All Rights Reserved.

11 Maintenance

WARNING! Arc flash and electric shock hazard. Open all local and remote electric power-supply disconnect switches, verify with a voltmeter that power is Off and wear appropriate, OSHA-approved personal protective equipment (PPE) per NFPA 70E before working within the electric control enclosure. Failure to comply can cause serious injury or death. Customer must provide earth ground to unit, per NEC, CEC and local codes, as applicable. Before proceeding with installation, read all instructions, verify that all the parts are included and check the nameplate to be sure the voltage matches available utility power. The Vertiv Liebert iCOM controller does not isolate power from the unit, even in the “Unit Off” mode. Some internal components require and receive power even during the “Unit Off” mode of the Vertiv Liebert iCOM controller. The factory-supplied disconnect switch is inside the unit. The line side of this switch contains live high-voltage. The only way to ensure that there is NO voltage inside the unit is to install and open a remote disconnect switch. Refer to unit electrical schematic. Follow all local codes.

WARNING! Risk of electric shock. Can cause equipment damage, injury or death. Open all local and remote electric power supply disconnect switches and verify with a voltmeter that power is off before working within any electric connection enclosures. Service and maintenance work must be performed only by properly trained and qualified personnel and in accordance with applicable regulations and manufacturers’ specifications. Opening or removing the covers to any equipment may expose personnel to lethal voltages within the unit even when it is apparently not operating and the input wiring is disconnected from the electrical source.

WARNING! Risk of improper wiring, piping, moving, lifting and handling. Can cause equipment damage, serious injury or death. Installation and service of this equipment should be done only by qualified personnel who have been specially-trained in the installation of air-conditioning equipment and who are wearing appropriate, OSHA-approved PPE.

WARNING! Risk of electric shock. Can cause serious injury or death. The Vertiv Liebert iCOM microprocessor does not isolate power from the unit, even in the "Unit Off" mode. Some internal components require and receive power even during the "unit off" mode of the Vertiv Liebert iCOM control. Open all local and remote electric power disconnect switches and verify with a voltmeter that power is Off before working on any component of the system.

© 2026 Vertiv Group Corp.

All Rights Reserved.

The Vertiv CoolPhase Flex is a single component in the facility heat-removal system. Proper application and maintenance of the entire system is critical to the life and reliability of the thermal-management units.

- Good maintenance practices are essential to minimizing operation costs and maximizing product life.
- Read and follow monthly and semi-annual maintenance schedules included in this manual. These MINIMUM maintenance intervals may need to be more frequent based on site-specific conditions.
- See the Vertiv™ CoolPhase Flex iCOM™ User Manual, SL-80004, available at www.Vertiv.com, for instructions on using the controller to predict some service maintenance intervals.
- We recommend the use of trained and authorized service personnel, extended service contracts and factory-specified replacement parts. Contact your Vertiv sales representative.

11.1 Service Access for Unit Maintenance

WARNING! Risk of pressurized doors flying open or slamming closed suddenly. Can cause serious injury. Do not attempt to open doors while fans are running. Do not turn on fans with doors open. Before opening the door, open all local and remote electric power supply disconnect switches, verify with a voltmeter that power is off, and verify that all fans have stopped rotating. Do not leave unsecured objects in the fan's bay after any maintenance operation.

WARNING! Risk of contact with flying objects. Can cause serious injury or death. Do not leave unsecured objects or tools in the fan's bay after performing maintenance operations. Re-install all panels before starting up this unit after maintenance is performed.

The Vertiv CoolPhase Flex includes a service door, see the submittal drawing 20000015 included in the Submittal Drawings on page 99 , for access to perform maintenance on components inside the thermal management unit. An electric enclosure next to the door provides a 120-V outlet and switches for lights inside the unit.

For the location of equipment for maintenance, see the appropriate pages of the submittal drawing 20000019 included in the Submittal Drawings on page 99 .

CAUTION: Risk of low-hanging panels. Can cause injury or equipment damage. Wear appropriate, OSHA-approved PPE when entering and working within the enclosure.

© 2026 Vertiv Group Corp.

All Rights Reserved.

Figure 11.1 Enclosure for Air Proof and Filter Clog switch for Perimeter Units

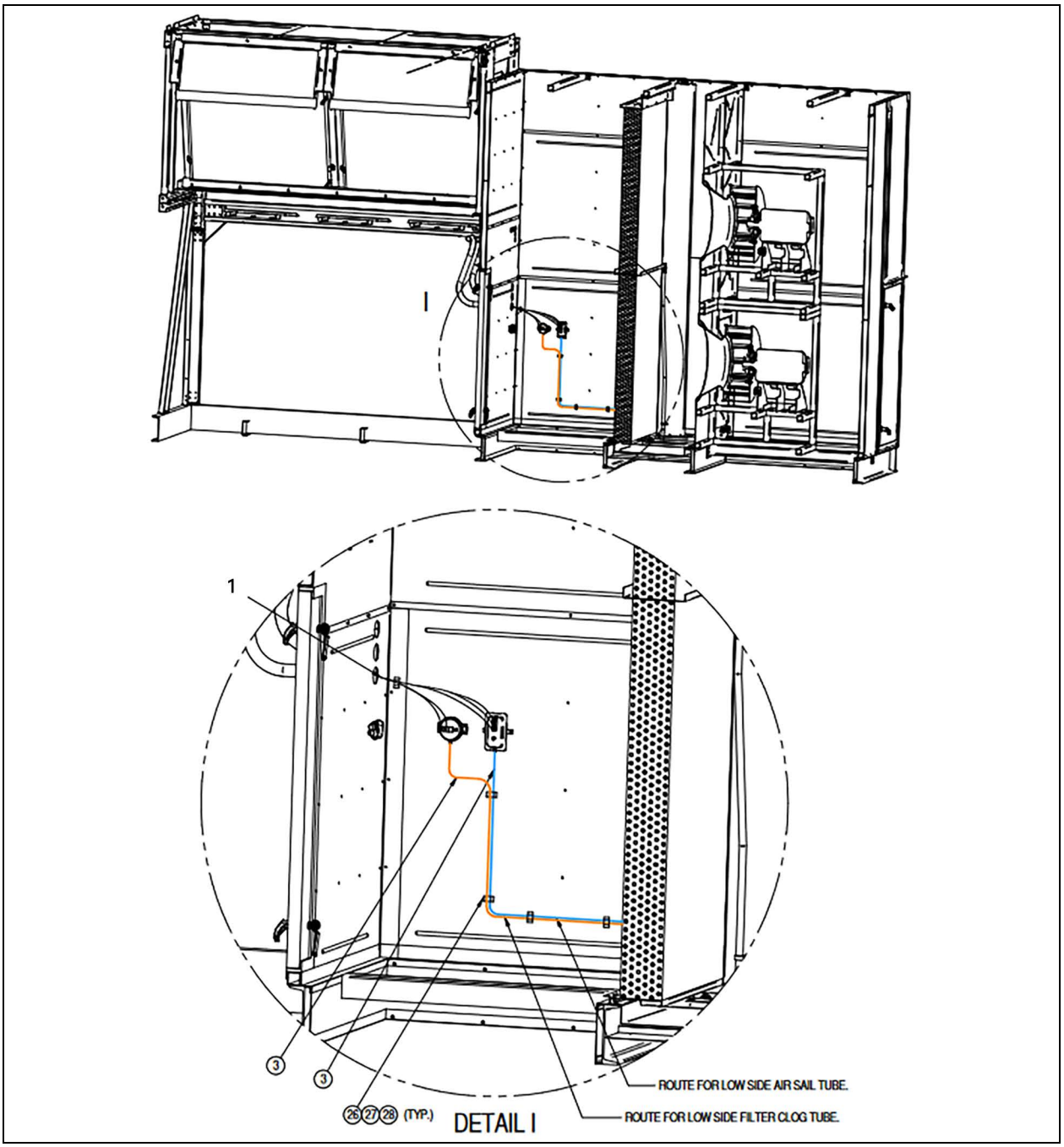

Item	Description
1	Enclosure for air-proof and filter-clog switch

© 2026 Vertiv Group Corp.
All Rights Reserved.

Item	Submittal
Separate, 120-V, field-supplied power feed for lights and convenience outlet	See 20000026 in Submittal Drawings on page 99 .
Service access door to evaporative section and filter replacement	See 20000026 in Submittal Drawings on page 99 .

11.2 Filters

NOTICE

Risk of improper filter installation. Can cause filter collapse and performance reduction.

To maximize the performance and reliability of the equipment, use only Vertiv filters. Contact your Vertiv representative to order replacement filters.

Verify that filters are installed and positioned so the flow direction is the same direction as unit water/air flow.

11.2.1 Replacing the Air Filters

WARNING! Risk of contact with high-speed rotating fan blades. Can cause serious injury or death. Open all local and remote electric power-supply disconnect switches, verify with a voltmeter that power is off, and verify that all fan blades have stopped rotating before working in the unit cabinet or on the fan assembly. If control voltage is applied, the fan motor can restart without warning after a power failure. Do not operate the unit with any or all cabinet panels removed.

1. Enter the unit through the service access door (see 200000015 included in Submittal Drawings on page 99) and locate the supply-side air filters in front of the heat exchanger.

Item	Description
1	Front access on the front side of the fan plenum.

2. Using the slot on the filter rack, shown in the following figure, remove all 30 filters:
3. Referring Figure 11.2 on the facing page , install the new air filters in each column as follows:
   - At the slot, insert the bottom 2 filters.
   - Add filters, and slide them upward until the column is filled.
   - The last filter is installed in the slot in the column.

© 2026 Vertiv Group Corp.

All Rights Reserved.

Figure 11.2 Supply Fan Air Filters in the Rack

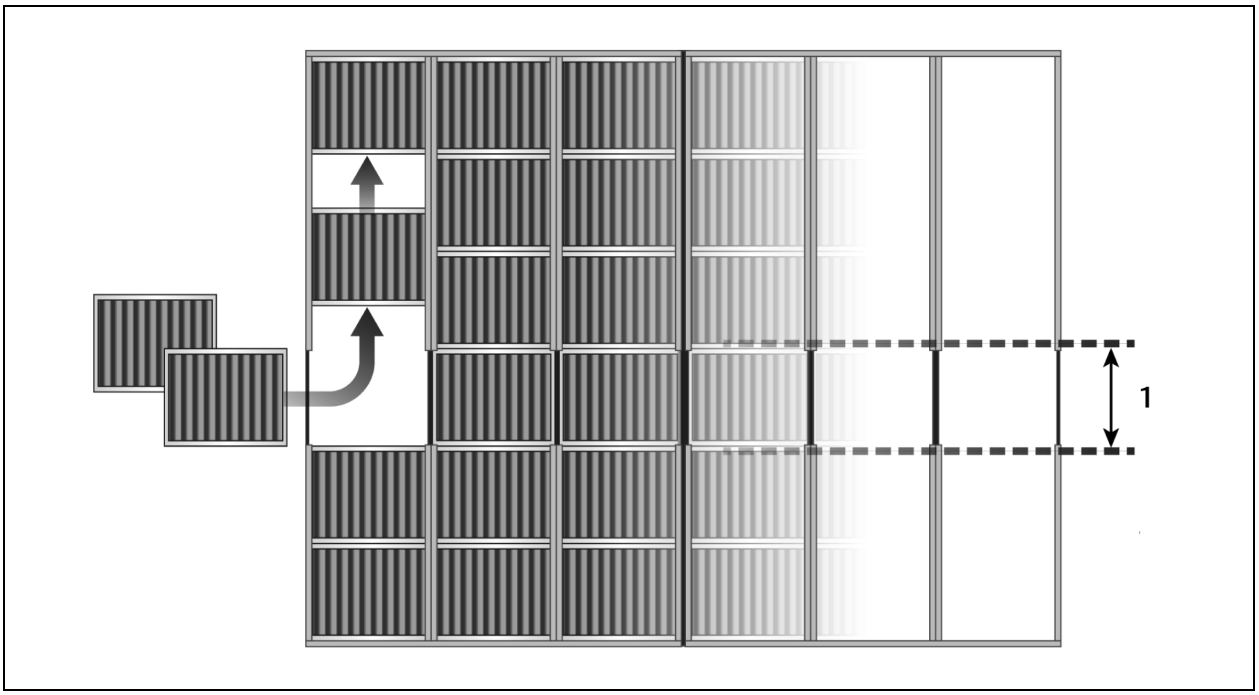

Item	Description
1	Slot in filter rack

11.2.2 Cleaning the Water Filters

NOTE: Only one water filter should be utilized at any given time so that the filters can be swapped while the system is still running. Each filter can withstand the unit's max flowrate only if it is clean. If flow is going through both filters initially and the filters become dirty (signaled by Vertiv Liebert iCOM), hot-swapping one filter at a time may cause damage to the other filter.

1. Enter the unit through the service damper door on the front of the unit. (see submittal drawing 20000202 included in Submittal Drawings on page 99) and locate the water filters apart of the liquid cooling assembly.
2. Ensure butterfly valves are in the shut position (perpendicular to the pipe as shown in items 1 and 2 in **Figure 11.3** on the next page .)
3. Open drain valve (item 5 shown in **Figure 11.3** on the next page) below the filter housing and wait until all water has drained from inside the filter.
4. Remove clamps (items and 4 shown in **Figure 11.3** on the next page). Remove piping.
5. Refer to **Figure 11.3** on the next page , pull out, clean, and re-install the filter screen.
6. Reconnect piping. Replace any damaged gaskets and ensure all gaskets are fully seated before tightening clamps.
7. Refill system and bleed out any air that remains.

© 2026 Vertiv Group Corp.

All Rights Reserved.

Figure 11.3 Liquid Cooling Water Filter Components

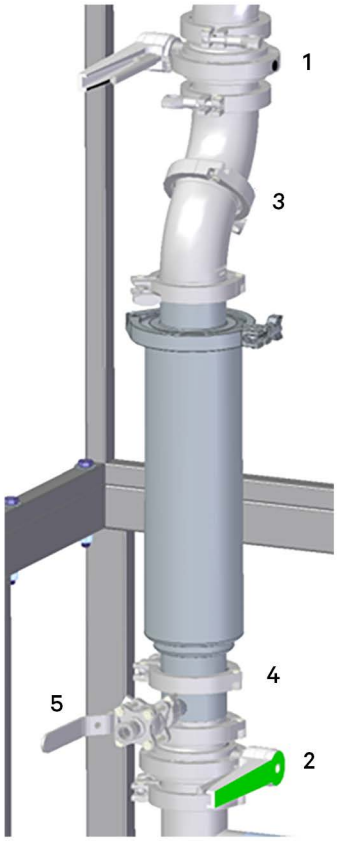

Item	Description
1	Top Butterfly Value
2	Bottom Butterfly Valve
3	Top Clamp
4	Bottom Clamp
5	Drain Valve

© 2026 Vertiv Group Corp.
All Rights Reserved.

Figure 11.4 Liquid Cooling Water Filter Assembly

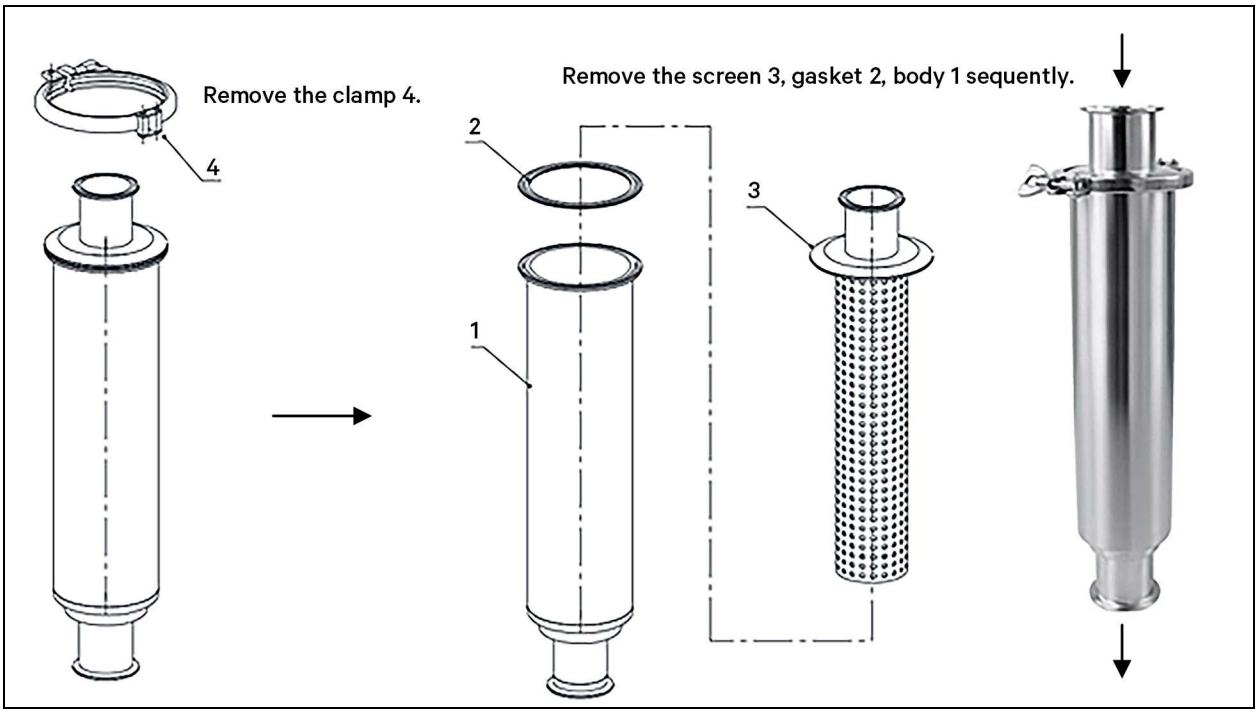

11.3 Evaporator Fan Maintenance

WARNING! Risk of very heavy, 250-lb (113.4-kg) condenser fan modules and 125-lb (57-kg) evaporator fan modules dropping downward suddenly. Can cause injury or death.
Support fan modules before removing mounting hardware. Use caution to keep body parts out of the fan modules pathway during repositioning. Only properly trained and qualified personnel should work on this equipment.

Consult the factory for fan/blower/inverter maintenance. Do not attempt to service or remove the fans without first contacting Vertiv support at 1-800-543-2778.

11.3.1 Fan Assembly Troubleshooting

Any safety hazards stemming from the device must be re-evaluated once it is installed in the end device.

Do not make any modifications, additions or conversions to the fan assembly without the approval of Vertiv.

WARNING! Risk of electric shock. Can cause serious injury or death. Open all local and remote electric power-supply disconnect switches and verify with a voltmeter that power is off before opening the fan motor electric-connection enclosure. Use only fully-trained and qualified HVAC technicians to replace or perform maintenance on the EC fans.

© 2026 Vertiv Group Corp.
All Rights Reserved.

WARNING! Risk of contact with high-speed rotating fan blades. Can cause serious injury or death. Open all local and remote electric power-supply disconnect switches, verify with a voltmeter that power is off, and verify that all fan blades have stopped rotating before working in the unit cabinet or on the fan assembly. If control voltage is applied, the fan motor can restart without warning after a power failure. Do not operate the unit with any or all cabinet panels removed.

CAUTION: Risk of exposure to harmful noise levels. Can cause hearing injury or loss. Depending on the installation and operating conditions, a sound pressure level greater than 70 dB(A) may arise. Take appropriate technical safety measures. Operating personnel must wear appropriate, OSHA-approved PPE and observe all appropriate hearing-protection safety requirements.

CAUTION: Risk of contact with hot surfaces. Can cause injury. The fan motor, and some electrical components are extremely hot during unit operation. Allow sufficient time for them to cool to a touch-safe temperature before working within the unit cabinet. Use extreme caution and wear appropriate, OSHA-approved PPE when working on or near hot components.

NOTICE

Risk of improper power-supply connection. Can cause equipment damage and loss of warranty coverage.

Prior to connecting any equipment to a main or alternate power source (for example: back-up generator systems) for start-up, commissioning, testing, or normal operation, ensure that these sources are correctly adjusted to the nameplate voltage and frequency of all equipment to be connected. In general, power-source voltages should be stabilized and regulated to within ±10% of the load nameplate nominal voltage. Also, ensure that no three-phase sources are single-phased at any time.

NOTE: Do not assume that the fan blades will not start to spin. If the motor is in a fault condition, it will safely shut down. Once the fault condition is cleared, there are certain conditions in which the motor will automatically resume operation.

11.3.2 Fan Assembly Maintenance

Inspect the fan assembly at regular intervals. Keep the assembly clean and clear of dust, dirt, and other debris.

11.3.3 Blower Motor Lubrication

The motor is initially lubricated at the factory.

Every year from DH400 start up, the motor bearings should be lubricated.

Use Exxon Polyrex EM grease Vertiv part 341166P1.

Please see DH400 Motor Maintenance on page 95 .

11.3.4 Removing Fan Assembly

Do not attempt to remove the fan assemblies without first contacting Vertiv Technical Support at 1-800-543-2778.

© 2026 Vertiv Group Corp.

All Rights Reserved.

11.4 Electronic Expansion Valve (EEV) Maintenance

The EEV controls superheat through the Vertiv Liebert iCOM controls by actively measuring suction pressure via a transducer attached to the suction-line rotalock and suction temperature via a thermister strapped to the suction line. The EEV actively adjusts the orifice size and resulting mass flow of refrigerant to maintain the superheat setpoint (set in Vertiv Liebert iCOM). The EEV is used in place of the standard thermal expansion valve (TXV).

WARNING! Risk of electric shock. Can cause serious injury or death. The Vertiv Liebert iCOM microprocessor does not isolate power from the unit, even in the "Unit Off" mode. Some internal components require and receive power even during the "unit off" mode of the Vertiv Liebert iCOM control. Open all local and remote electric power disconnect switches and verify with a voltmeter that power is Off before working on any component of the system.

NOTE: Intermittent loss of subcooling may result in EEV/superheat instability.

11.5 Fluid and Piping Maintenance

Maintaining the system fluid quality is required throughout the life of the system. Fluid and piping system maintenance schedules must be established and performed. A coolant fluid maintenance program must be established that will evaluate fluid chemistry and apply necessary treatment. The complexity of water condition problems and the variations of required treatment programs make it extremely important to obtain the advice of a competent and experienced water treatment specialist and follow a regularly scheduled coolant fluid system maintenance program.

© 2026 Vertiv Group Corp.

All Rights Reserved.

11.6 Flow Sensor

WARNING! Arc flash and electric shock hazard. Open all local and remote electric power supply disconnect switches, verify with a voltmeter that power is Off, and wear appropriate, OSHA approved personal protective equipment (PPE) per NFPA 70E before working within the electric control enclosure. Failure to comply can cause serious injury or death. Customer must provide earth ground to unit, per NEC, CEC, and local codes, as applicable. Before proceeding with installation, read all instructions, verify that all the parts are included, and check the nameplate to be sure the voltage matches available utility power. The Vertiv Liebert iCOM controller does not isolate power from the unit, even in the Unit Off mode. Some internal components require and receive power even during the Unit Off mode of the Vertiv Liebert iCOM controller. The factory supplied, optional disconnect switch is inside the unit. The line side of this switch contains live high voltage. The only way to ensure that there is NO voltage inside the unit is to install and open a remote disconnect switch. Refer to unit electrical schematic. Follow all local codes.

WARNING! Risk of electric shock. Can cause serious injury or death. Building and equipment damage may also result. Open all local and remote electric power supply disconnect switches and verify that power is off with a voltmeter before working within any electric connection enclosures. The Vertiv Liebert iCOM controller does not isolate power from the unit, even in the "Unit Off" mode. Some internal components require and receive power even during the "unit off" mode of the Vertiv Liebert iCOM controller.

Installation, service, and maintenance work must be performed only by properly trained and qualified personnel and in accordance with applicable regulations and manufacturers' specifications. Opening or removing the covers to any equipment may expose personnel to lethal voltages within the unit even when it is apparently not operating and the input wiring is disconnected from the electrical source.

CAUTION: Risk of contact with extremely hot or cold surfaces. Can cause injury. Verify that all components have reached a temperature that is safe for human contact or wear appropriate, OSHA-approved PPE before working with the electric connection enclosures or unit cabinet. Perform maintenance only when the system is de-energized and component temperatures have become safe for human contact.

Fluid flow is sensed and reported to the unit control by an ultrasonic flow sensor. The sensor is clamped to the unit piping without penetrating the pipe or obstructing the flow.

To replace the flow sensor:

1. Shut off all power to the unit by opening the main disconnect switch on the front of the main electrical panel and the power to the UPS in the Vertiv CoolPhase Flex.
2. Disconnect the flow sensor cable.
3. Unscrew the two sensor mounting screws and remove the sensor.
4. Attach the new flow sensor to the mounting bracket with the two screws. Tighten screws evenly to ensure even pressure on the rubber backing of the flow meter.

NOTE: Do not adjust the flow sensor location once the rubber backing has made contact with the pipe. The rubber may tear, causing the flow sensor to not work properly.

5. Attach the sensor cable to the new flow sensor.

© 2026 Vertiv Group Corp.

All Rights Reserved.

6. Restore power to the unit and unit UPS.
7. Program the flow sensor parameters using the instructions provided with the sensor. (See **Figure 11.5** below .)

Table 11.1 Parameter Settings

Parameter Setting	Value
Analog output lower limit (A-LOF)	0 gpm
Analog output upper limit (A-HIF)	202 gpm

Table 11.2 Initial Parameter Settings

CH.2	ANLG
GAL	ON
PIPE	2

Figure 11.5 Flow Sensor

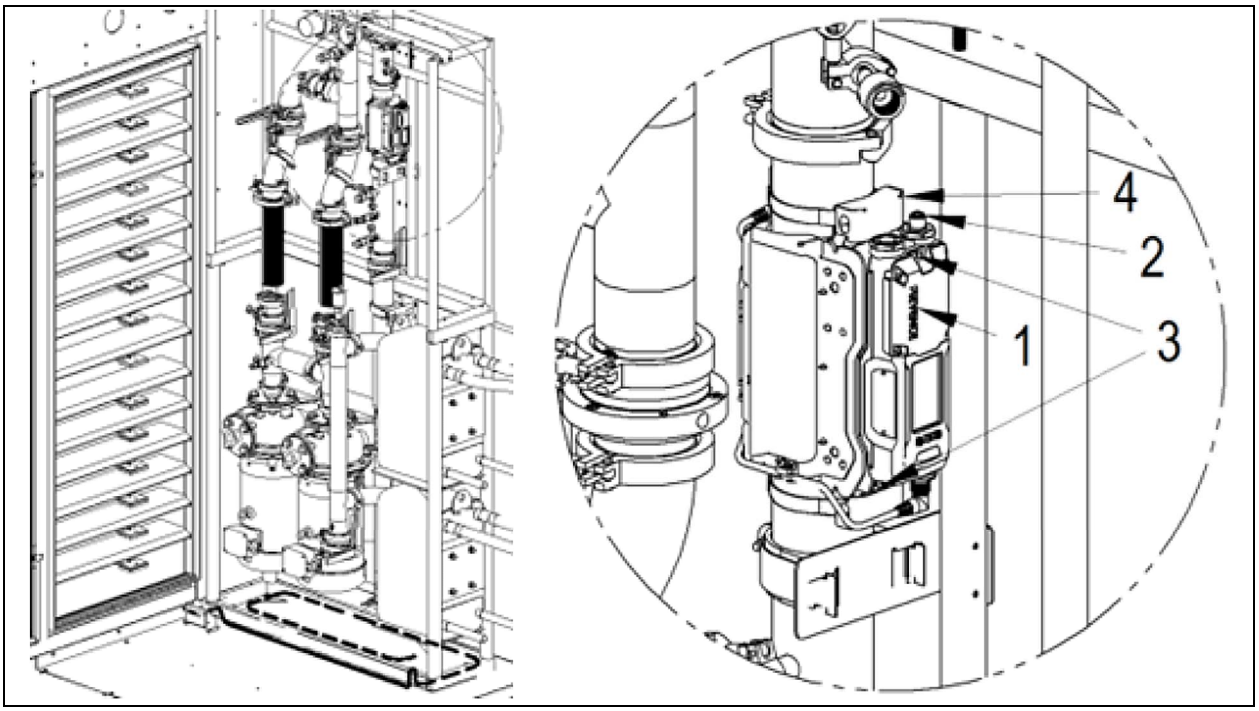

Item	Description
1	Flow sensor
2	Cable connection
3	Mounting screws
4	Mounting bracket

© 2026 Vertiv Group Corp.
All Rights Reserved.

11.7 Compressor Maintenance

WARNING! Risk of over-pressurization of the refrigeration system. Can cause explosive discharge of high-pressure refrigerant, loss of refrigerant, environmental pollution, equipment damage, injury, or death. This unit contains fluids and gases under high pressure. Use extreme caution when charging the refrigerant system. Do not pressurize the system higher than the design pressure marked on the unit's nameplate.

11.7.1 Compressor Oil

NOTICE

Risk of improper compressor lubrication. Can cause compressor and refrigerant system damage.

Failure to use oil types, viscosities and quantities recommended by the compressor manufacturer may reduce compressor life and void the compressor warranty.

- Do not mix polyolester (POE) and mineral-based oils.
- Do not mix oils of different viscosities.
- Consult Vertiv technical support or the compressor manufacturer if questions arise.

11.7.2 Replacement Compressors

Replacement compressors are available through your Vertiv sales office. If the unit is under warranty, the replacement compressor must be obtained from and the original compressor returned to your local Vertiv sales office. Compressors are shipped in reusable packaging, and the original compressor should be returned in the same packaging.

11.7.3 Compressor Electrical Failure (Motor Burnout)

If a burnout has occurred, a full system cleanout is required. If not cleaned, compressor and system problems will continue.

Consult the factory for compressor maintenance. Do not attempt to remove the compressor without first contacting Vertiv support at 1-800-543-2778.

11.7.4 Unloading Solenoid(s) on a Digital Scroll Compressor

When replacing a digital scroll compressor, the digital solenoid valve and coil must be replaced. The compressor and valve kit are shipped separately. The valve kit must be field brazed to the top of the compressor in proper orientation and supported with the original factory bracket.

© 2026 Vertiv Group Corp.

All Rights Reserved.

11.7.5 Compressor Failure

WARNING! Risk of electric shock. Can cause serious injury or death. The Vertiv Liebert iCOM microprocessor does not isolate power from the unit, even in the "Unit Off" mode. Some internal components require and receive power even during the "unit off" mode of the Vertiv Liebert iCOM control. Open all local and remote electric power disconnect switches and verify with a voltmeter that power is Off before working on any component of the system.

WARNING! Risk of over-pressurization of the refrigeration system. Can cause explosive discharge of high-pressure refrigerant, loss of refrigerant, environmental pollution, equipment damage, injury, or death. This unit contains fluids and gases under high pressure. Use extreme caution when charging the refrigerant system. Do not pressurize the system higher than the design pressure marked on the unit's nameplate.

NOTE: Release of refrigerant to the atmosphere is harmful to the environment. Refrigerant must be recycled or discarded in accordance with federal, state, and local regulations.

1. Attach suction and discharge gauges to access fittings.
2. Recover refrigerant using an approved recovery procedure and equipment. Use a filter drier when charging the system with recovered refrigerant.
3. Remove marked pressure transducer and discharge pressure switch. Disconnect all electrical connections.
4. Remove failed compressor.
5. Follow compressor manufacturer's suggested cleanout procedures.
6. Install replacement compressor and make all connections. Replace unloading solenoid.
7. Evacuate, charge and operate per the appropriate procedure per local codes:
8. Verify oil charge per Verifying Additional Oil Charge on page 32 .

NOTICE

Risk of improper component re-installation. Can cause equipment damage.

Identify and mark location of suction pressure transducer and discharge pressure switch. These devices look similar and they must be reinstalled in their original location.

© 2026 Vertiv Group Corp.

All Rights Reserved.

11.7.6 Evacuation, Leak Testing, and Charging

Evacuation and Leak Testing Air Cooled Systems

For proper leak check and evacuation, you must open all system valves and account for all check valves.

NOTE: The system includes a factory installed check valve and an additional downstream Schrader valve with core in the compressor discharge line. Proper evacuation of the condenser side of the compressor can be accomplished only using the downstream Schrader valve. See the appropriate piping schematic for your system in Submittal Drawings on page 99 .

1. Starting with Circuit #1, open the services valves and place 150 PSIG (1,034 kPa) of dry nitrogen with a tracer of refrigerant. Check system for leaks with a suitable leak detector.
2. With pressure still in Circuit #1, open the compressor service valves in Circuit #2.
   - If pressure increases in Circuit #2, the system is cross-circuited and must be re-checked for proper piping.
   - If there is no pressure increase, repeat Step 1 on Circuit #2.
3. After completion of leak testing, release the test pressure, (observe local code) and pull an initial deep vacuum of 500 microns on the system with a suitable pump.
4. After four hours, check the pressure readings and, if they have not changed, break vacuum with dry nitrogen. Pull a second and third vacuum to 500 microns or less. Re-check the pressure after two hours.

When the three checks are complete, remove the jumper hose from the service valve fitting and the condenser, and proceed to Charging Air Cooled Systems on the facing page .

Break Vacuum

Using a manifold charging hose equipped with a ball valve, properly connect to a tank of refrigerant, and purge the hose with refrigerant to ensure non-condensables do not enter the system. Connect the hose assembly to the liquid line Schrader port and break circuit vacuum with a portion of the calculated refrigerant pre-charge. Add enough refrigerant to bring pressure slightly above positive. Close ball valve and remove refrigerant tank.

© 2026 Vertiv Group Corp.

All Rights Reserved.

Charging Air Cooled Systems

NOTICE

Risk of improper refrigerant charging can cause equipment damage.

R-410A and R-454B are blended refrigerants and must be introduced and charged from the cylinder only as a liquid.

When adding liquid refrigerant to an operating system, it may be necessary to add the refrigerant through the compressor suction service valve. Care must be exercised to avoid damage to the compressor. We recommend connecting a sight glass between the charging hose and the compressor suction service valve. This will permit adjustment of the cylinder hand valve so that liquid can leave the cylinder while allowing vapor to enter the compressor.

NOTICE

Risk of improper operation. Can cause compressor failure.

Operating the unit with the EEV closed can cause compressor failure. A minimum of 20 psig (138 kPa) must be established and maintained for the compressor to operate. The charging function can be reset as many times as required to complete.

To charge the system:

1. Check the nameplate on the unit for refrigerant type to be used.
2. Add additional compressor and trap oil. See Additional Oil Requirements for Scroll and Digital Scroll Compressors on page 31.
3. See Refrigerant Piping and Charging on page 29 for unit charge per circuit.
4. Accurately weigh in as much of the system charge as possible before starting the unit. Do not exceed the calculated charge by more than 0.5 lb (0.37 kg).
5. Close the heat rejection disconnect switch.
6. We recommend charging the unit with the return-air setpoint between 75°F and 85°F (24°C and 29°C).
   - The return-air temperature to the unit being charged must be stable and must be maintained greater than 65°F (18°C). If this is not possible due to lack of heat load, then the load banks must be used to offset the cooling load during start-up. See Evacuation, Leak Testing, and Charging on the previous page.
7. Close the Vertiv CoolPhase Flex disconnect switch.
8. In the Service menu of the Vertiv Liebert iCOM controller, select Diagnostics/Service > Diagnostics.
   a. Enable Manual Mode.

NOTE: Manual Mode will timeout after 30 minutes.

   b. In Evaporator Fan options, set Motors to ON to operate the fan during Manual Mode.
   c. In Compressor Circuit 1 options, set Compressor Mode to Charge to operate the compressor at full capacity, energize the blower motor, and open the EEV.
   d. Reset the charge function as many times as needed to complete unit charging.

NOTE: You must establish and maintain a minimum of 20 psig (138 KPa) for the compressor to operate.

   e. Repeat Step 8 for Compressor Circuits 2, 3, and 4.
9. Check the refrigerant superheat level after the unit has been operating for at least 15 minutes.

© 2026 Vertiv Group Corp.

All Rights Reserved.

10. Adjust the refrigerant level in each circuit to achieve a steady superheat of 12°F to 14°F (-11.1°C to -10°C). The digital and fixed compressor must both operate for charge verification. the digital compressor must run at 100%.
11. After adjusting the refrigerant, allow the system to operate for another additional 15 minutes before checking need of further adjustment.
12. Repeat the procedure for the second, third, and fourth circuit.

11.8 General Condenser Maintenance

Periodic attention is necessary for continued satisfactory operation of your unit. Restricted air flow through the condenser coil, reduced airflow from non-functioning fans and low refrigerant system charge levels will reduce the operating efficiency of the unit and can result in high condensing temperatures .and loss of cooling. In winter, do not permit snow to accumulate around the sides or underneath the condenser coil.

Monthly and semi-annual inspections and maintenance are recommended for proper system operation. Use copies of Preventive Maintenance Checklist on page 89 for each of these inspections.

11.9 Condenser Cleaning

Keeping the coils in the outdoor unit clean is an important factor in maintaining peak efficiency, reliability, and long life of the equipment. The unit will operate more efficiently with frequent cleanings. If you delay cleaning until heavy build-up occurs, head-pressure problems with the evaporator units can develop.

11.9.1 When to Clean the Condenser Coil

Normal conditions typically dictate cleaning twice a year, in spring and fall. On-site or area conditions such as cottonwood trees, construction, etc., can increase cleaning frequency. On your standard monthly preventive maintenance schedule, we recommend a visual inspection of the coil to monitor conditions.

11.9.2 What to Use to Clean the Condenser Coil

NOTICE

Risk of improper cleaning agent selection, including non-base paint solvents. Can cause building and equipment damage and loss of refrigerant charge.

Using acid-based or sodium hydroxide-based cleaners can damage the drycooler coil and cause a loss of charge. This could cause equipment damage as well as damage to the surrounding structure.

Start with removing dirt, leaves, fibers, etc. with a soft brush or vacuum cleaner fitted with a soft-brush attachment. Do not use a wire brush or scrape the coil with a metal vacuum hose. The best overall coil cleaner is plain water. If the coil is maintained and cleaned at regular intervals, water is sufficient to remove dirt and debris from the fins. Water pressure from a garden hose and sprayer usually works well. If a pressure washer is used, make sure that the equipment is set to a lower pressure setting and that the nozzle is set to the fan spray, not stream. Otherwise, damage to the fins could result. If a cleaner is required, we recommend using a neutral cleaner, neither acidic nor base. Acid-type cleaners can damage the coil fins and surrounding areas. Many sites do not allow the use of acidic cleaners for environmental reasons.

© 2026 Vertiv Group Corp.

All Rights Reserved.

11.9.3 Cleaning the Condenser Coil

The condenser coil is accessible through the cleaning window, which allows you to clean the coil without removing the fans from the unit.

To clean the coil:

1. Disconnect the power supply before working on the unit.
2. Open the cleaning window(s) on the side of the condenser by loosening the mounting screws.
3. Insert a spray nozzle on the end of a suitable extension and apply the water/cleaning solution, working back and forth across the coil face.
   The solution pushes dirt and debris out the bottom of the coil.
   - If you are using a cleaner along with the spraying process, follow recommended manufacturer instructions and be sure to rinse the coil thoroughly. Any residue left on the coil can act as a magnet to dirt.
4. Reinstall the cleaning window(s) and reconnect the power supply to the condenser.
5. Coils will possibly retain water after cleaning and rinsing, so manually reverse the fans briefly using condenser controls to speed drying of the coils and prevent a possible high-head-pressure condition when the condenser is put back into service.

NOTE: Spraying the coil from the outside repeatedly can push a majority of the dirt to the inner section of the fins and continue to restrict air flow. Keep in mind you may not have the luxury of shutting the unit(s) down for an extended time. A scheduled shutdown with the operator may be in order.

11.9.4 Cleaning the Condenser Fan

- Clean the EC fan with water only when temperatures are greater than 50°F (10°C)
- Make sure that no water gets into the inside of the motor.
- Do not hold the jet spray directly on the motor openings and seals.
- During cleaning work using a jet spray, no guarantee is assumed regarding corrosion formation/paint adhesion for unpainted/painted fans.

11.10 Replacing the Condenser Fan

WARNING! Arc flash and electric shock hazard. Open all local and remote electric power-supply disconnect switches, verify with a voltmeter that power is Off and wear appropriate, OSHA-approved personal protective equipment (PPE) per NFPA 70E before working within the electric control enclosure. Failure to comply can cause serious injury or death. Customer must provide earth ground to unit, per NEC, CEC and local codes, as applicable. Before proceeding with installation, read all instructions, verify that all the parts are included and check the nameplate to be sure the voltage matches available utility power. The Vertiv Liebert iCOM controller does not isolate power from the unit, even in the "Unit Off" mode. Some internal components require and receive power even during the "Unit Off" mode of the Vertiv Liebert iCOM controller. The factory-supplied disconnect switch is inside the unit. The line side of this switch contains live high-voltage. The only way to ensure that there is NO voltage inside the unit is to install and open a remote disconnect switch. Refer to unit electrical schematic. Follow all local codes.

© 2026 Vertiv Group Corp.

All Rights Reserved.

WARNING! Risk of electric shock. Can cause serious injury or death. Open all local and remote electric power supply disconnect switches and verify with a voltmeter that power is off before working within the fan-motor electric-connection enclosures. Fan-motor controls can maintain an electric charge for 10 minutes after power is disconnected. Wait 10 minutes after power is verified as off before working within the fan electric control/connection enclosures. Use only fully-trained and qualified HVAC technicians to perform maintenance on the fans.

WARNING! Risk of contact with high-speed rotating fan blades. Can cause serious injury or death. Open all local and remote electric power-supply disconnect switches, verify with a voltmeter that power is off, and verify that all fan blades have stopped rotating before working in the unit cabinet or on the fan assembly. If control voltage is applied, the fan motor can restart without warning after a power failure. Do not operate the unit with any or all cabinet panels removed.

CAUTION: Risk of contact with hot surfaces. Can cause injury. The compressor, refrigerant discharge lines, fan motor, and some electrical components are extremely hot during unit operation. Allow sufficient time for them to cool to a touch-safe temperature before working within the unit cabinet. Use extreme caution and wear appropriate, OSHA-approved PPE when working on or near hot components.

CAUTION: Risk of improper moving, lifting and handling. Can cause equipment damage or injury. Only properly trained and qualified personnel should work on this equipment. Condenser fan modules weigh in excess of weigh in excess of 250 lb (113.4 kg). Use proper lifting techniques and wear appropriate, OSHA-approved PPE to avoid injury and dropping the fan module during removal. Equipment used in handling/lifting, and/or installing the fan assembly must meet OSHA requirements. Use handling/lifting equipment rated for the weight of the fan assembly. Use ladders rated for the weight of the fan assembly and technicians if used during installation. Refer to handling/lifting, and/or installation equipment operating manual for manufacturer's safety requirements and operating procedures.

NOTE: If at any time a parameter is entered and the condenser display does not show 888 or if the display shows Err, re-enter the parameter. If the display still shows Err after ENT is pressed, power cycle the control board by unplugging P24, waiting 15 seconds and plugging P24 back in. Contact the factory if the parameter still displays Err after ENT is pressed.

To replace the fan:

1. Turn Off power to the unit using the disconnect.
2. Use a voltmeter to verify that voltage is no longer present at the unit. Wait a minimum of 10 minutes to allow the EC fan capacitors to discharge before proceeding.
3. Remove the fan cover, disconnect electrical connections internal to the EC fan and remove the cable glands from the EC fan to be replaced.
4. Remove hardware that attaches the EC fan to the condenser.

© 2026 Vertiv Group Corp.

All Rights Reserved.

5. Use lifting equipment or an adequate number of personnel to remove the EC fan from the condenser.

NOTE: A spreader bar may be required for the lifting equipment if only one technician is performing the fan replacement.

6. Install a spreader bar over the new EC fan if only one technician is performing the fan replacement.
7. Verify that the wire harness on the new EC fan is secured out of the way before lifting the fan.
8. Verify that the lifting cable/chains are not in contact with fan blades before lifting the new fan into place on the condenser.
9. Install the new fan in the condenser and connect the mounting hardware.
10. Verify that the fan blades rotate freely when installed in unit.
11. Install the new cable glands included with the new EC fan. Torque for the cable glands is:
    - 800-mm fans: 32.75 to 38 in-lb (3.7 to 4.3Nm)

    Dispose of the old cable glands once the new glands are installed.
12. Add a compression nut to the wire—Do not tighten the nut.
13. Reconnect the wiring to the proper terminals. (For more details look at factory provided electrical schematic.)
    - The torque for the electrical terminals is 11.5 in-lb (1.3 Nm). Tighten the compression nut to a torque of 22 in-lb (2.5 Nm).
14. With the PCB powered, the board display should read *F00*.
15. Press the **ESC** button.
16. Press the **UP** and **DOWN** arrow button until P-C displays.
    - If *P-C* is displayed, see P-C Menu Programming below .
    - if *P-C* is not displayed, see Manual Fan Addressing (No P-C Menu) on page 77 .
    - Once set-up is complete, see Verifying the Fan Address on page 78 .

11.10.1 P-C Menu Programming

NOTE: The complete list of P--, C--, and F-- parameters is located inside the lid of the electrical box panel.

1. If P-C is displayed, press the **ENT** button to enter the P-C Menu.
2. The P-C Menu allows compact set-up/preparation of the condenser in the factory or in the field. Use the functions described in **Table 11.3** on the next page to establish a default control configuration for the board.

© 2026 Vertiv Group Corp.

All Rights Reserved.

Table 11.3 P-C Menu Items and Definitions

Item ID	Meaning	Default	Notes
P01	Enter Preparation Mode	0	Setting this value to '1' enables preparation mode. All other 'P—'menu items are disabled until this value is '1'. Note that control operations may be affected during preparation mode, therefore the cooling unit should be off. Setting this value back to '0' creates new default values based upon selections in this menu. After default values are established, the board exits preparation mode and reboots.
P02	Automatic VSD Configuration	1	This item should only be used to address the VSDs for the unit. The value entered indicates the model of the VSD: 1 – EBM 2 – Ziehl-Abegg 3 – Fans Tech 4 – Rosenberg 5 – Not Used 6 – Multi-wing All fans must be the same model to use this parameter. When *ENT* is pressed, the board will operate and power contactors for the VSDs and assign ModBus addresses. This procedure may take up to 5 minutes to complete.
P03	Refrigerant Type	2	1 = R22 2 = R407C 3 = R410A 4 = R454B
P04	Number of Circuits	1	1 = Single Circuit 2 = Dual Circuit
P05	Vertiv™ Liebert® Lee-Temp Option	0	0 = No Vertiv Liebert Lee-Temp installed 1 = Vertiv Liebert Lee-Temp installed
P06	Condenser	1	0 = Small 1 = Medium 2 = Large
P20	Device Type	2	0 = Global Condenser 1 = Pump Refrigerant Economizer 2 = Consolidation

NOTE: Once set-up is complete, see Verifying the Fan Address on page 78 .

© 2026 Vertiv Group Corp.
All Rights Reserved.

11.10.2 Manual Fan Addressing (No P-C Menu)

1. Unplug all fans before making changes to the fan configuration menu. If a fan has been replaced or is being readdressed, keep it unplugged until the fan type has been configured and it is ready to be addressed (Step 15).
2. Turn the power On.
3. The control board flashes *F00* on the display when it has completed its boot cycle.
4. Press the **ESC** button.
5. Use the **UP** or **DOWN** arrow button until *C-C* displays.
6. Press the **ENT** button.
7. Use the **UP** or **DOWN** arrow button until *C03* displays
8. Press the **ENT** button.
9. Use the **UP** or **DOWN** arrow button to select one of five options:

Table 11.4 Configuration Code Values

Configuration Code	Fan #	Value
C03	Fan 1	0 = No Fan 1 = EBM Papst 2 = Ziehl-Abegg 4 = Rosenberg 6 = Multi-wing
C04	Fan 2	
C05	Fan 3	
C06	Fan 4	

10. Press the **ENT** button.
11. If the new value is entered into the control board, the display flashes "*888*."
12. Press the **ESC** button to display *C03*.
13. Repeat steps 4 through 11 for the remaining fans' configuration codes, *C04, C05* and *C06* setting them to 0, No Fan.
14. Unplug the power connector to the Condenser controller board (24).
15. Reconnect only the fan to be addressed, to P23 (on the control board), Fan 1's connection. Make sure to only plug in one fan at a time during this process or you may corrupt the settings in other fans. Plugs listed below.
    - P23 = Fan 1
    - P27 = Fan 2
    - P28 = Fan 3
    - P29 = Fan 4
16. Wait 30 seconds (60 seconds when using Multi-wing).
17. Power the condenser board back up and wait for the F00 to be displayed.
18. Use the **UP** or **DOWN** arrow button to select one of the following parameters.

    The correct parameter depends on the supplier of the fan that will be addressed.

    - C00—EBM Papst fan
    - C01—Ziehl-Abegg fan
    - C29—Rosenberg
    - C30—Multi-wing

© 2026 Vertiv Group Corp.

All Rights Reserved.

19. Press the **ENT** button.
20. Use the **UP** or **DOWN** arrow button to the correct fan address number. Fan 1 should be 1 (fan closest to electric panel end). Fan 2 should be 2, etc.
21. Press the **ENT** button. The display flashes "*888* " when the command is accepted.
22. Press the **ESC** button for the parameter to be shown on the display.
23. Repeat steps 7 through 22 for the rest of the fans that need to be addressed such that only the fan to be addressed is connected and it is plugged into the fan 1 output P23.
24. Once addressing is complete, unplug all fans so they can be connected to the correct output after configuration (Step 28).
25. Use the C3-C6 commands as shown in Step 9 so that all installed fans are set to the correct matching brand.
26. Unplug the power plug, P24, from the control board.
27. Wait 30 seconds.
28. Plug all the contactor output plugs back into the board in their correct positions.
29. Plug P24 back into the control board.
30. After the control board completes its boot cycle and all the contactors are energized, wait 5 seconds.
31. Press the **ESC** button.
32. Use the **UP** or **DOWN** arrow button until *A-C* is on the display.
33. Press **ENT** button.
34. Use the **UP** or **DOWN** arrow button to see if any of the following errors are shown.

    115: Unable to communicate with Fan 1.

    215: Unable to communicate with Fan 2.

    315: Unable to communicate with Fan 3.

    415: Unable to communicate with Fan 4.
35. If any of these errors appear, check the communication wiring at the problem fan and the fan before it.
36. If the wiring is correct and properly wired to the terminal, repeat the fan addressing procedure in steps 14 through 34 .
37. If none of the errors listed in step 34 displays, press the **ESC** button.

11.10.3 Verifying the Fan Address

To verify that each fan has a unique address:

1. Use the **UP** or **DOWN** arrow button until *C-C* displays.
2. Press the **ENT** button.
3. In the Manual/System Control Selection parameter use the **UP** or **DOWN** arrow button until *C24* displays.
4. In the Manual Control configuration parameter, press the **ENT** button.
5. Use the **UP** or **DOWN** arrow button to select *0*.
6. Press the **ENT** button.
   The reads "*888*" if the command is accepted.
7. Press the **ESC** button to display *C24* .
8. Use the **UP** or **DOWN** arrow button until *C34* displays.

© 2026 Vertiv Group Corp.

All Rights Reserved.

9. Press **ENT** button.
   If Fan 1 is running, the fans speed should display in terms of percentage of full speed. If Fan 1 is not running, *0.00* should display.
10. Use the **UP** or **DOWN** arrow button to enter *100%* speed.
11. Press the **ENT** button.
    The display reads "*888*" if the command is accepted.
    - Fan 1 should speed up to 100%, and all the other fans should stay the same speed.
12. If Fan 1 is not running or if any of the other fans also speed up to 100%, steps 15 through 22 of Manual Fan Addressing (No P-C Menu) on page 77 , must be repeated.
13. Press the ESC button for the parameter to be shown on the display.
14. Repeat steps 3 through 8 for the rest of the fans, if present.
    - C35: for Fan 2.
    - C36: for Fan 3.
    - C37: for Fan 4.

NOTE: All fans should be at 100% speed.

15. Use the **UP** or **DOWN** arrow button until *C24* displays.
16. Press the **ENT** button.
17. In the System Control configuration parameter, use the **UP** or **DOWN** arrow button to select *1*.
18. Press the **ENT** button.
    The display flashes "*888*" if the command is accepted.
19. Press the **ESC** button to display *C24*.
    All fans should return to a normal speed based on the pressure input and the state of indoor unit's compressor.

Notes on the Premium Efficiency Control Board

- J6 is the CANbus termination jumpers. If the condenser is the last device in the CANbus communication line, the jumper must be placed between Pins 1 and 2 of J6. If the condenser is not the last device in the CANbus communication line, then the jumper on J6 must be placed on Pins 2 and 3. CANbus communication errors may occur if the jumpers are not in the correct positions.
- A jumper must be present at J2. If a jumper is not present, the control board will not boot properly during power start-up.

© 2026 Vertiv Group Corp.
All Rights Reserved.

11.11 Replacing the Premium Efficiency Control Board

Use these steps to replace the premium efficiency control board.

WARNING! Arc flash and electric shock hazard. Open all local and remote electric power-supply disconnect switches, verify with a voltmeter that power is Off and wear appropriate, OSHA-approved personal protective equipment (PPE) per NFPA 70E before working within the electric control enclosure. Failure to comply can cause serious injury or death. Customer must provide earth ground to unit, per NEC, CEC and local codes, as applicable. Before proceeding with installation, read all instructions, verify that all the parts are included and check the nameplate to be sure the voltage matches available utility power. The Vertiv Liebert iCOM controller does not isolate power from the unit, even in the "Unit Off" mode. Some internal components require and receive power even during the "Unit Off" mode of the Vertiv Liebert iCOM controller. The factory-supplied disconnect switch is inside the unit. The line side of this switch contains live high-voltage. The only way to ensure that there is NO voltage inside the unit is to install and open a remote disconnect switch. Refer to unit electrical schematic. Follow all local codes.

11.11.1 Preparing to Replace the Board

1. Verify that the following jumpers are installed on the new board (see **Figure 11.6** on the facing page):
   - Jumper at J4 and J6 on Pins 2 and 3.
   - Jumper on J2.
   - Jumper on J5 on Pins 1 and 2.
2. Locate the latest revision of the HMI parameters label, 10097135P1, included with the new control board.

NOTE: In Figure 11.6 on the facing page , J6 is the CANbus termination jumper. J4 is the RS485 service termination jumper. If the condenser is the last device in the CANbus communication line, the jumper must be placed between Pins 1 and 2 of J6. If the condenser is not the last device in the CANbus communication line, the jumpers on J6 must be placed on Pins 2 and 3. If the jumper is not in the correct positions, CANbus communication errors may occur. The jumper on J4 will always be placed between Pins 1 and 2.

NOTE: In Figure 11.6 on the facing page , a jumper must be present at J2. If a jumper is not present, the control board will not boot properly during power start-up.

© 2026 Vertiv Group Corp.

All Rights Reserved.

Figure 11.6 Jumper Locations on Control Board

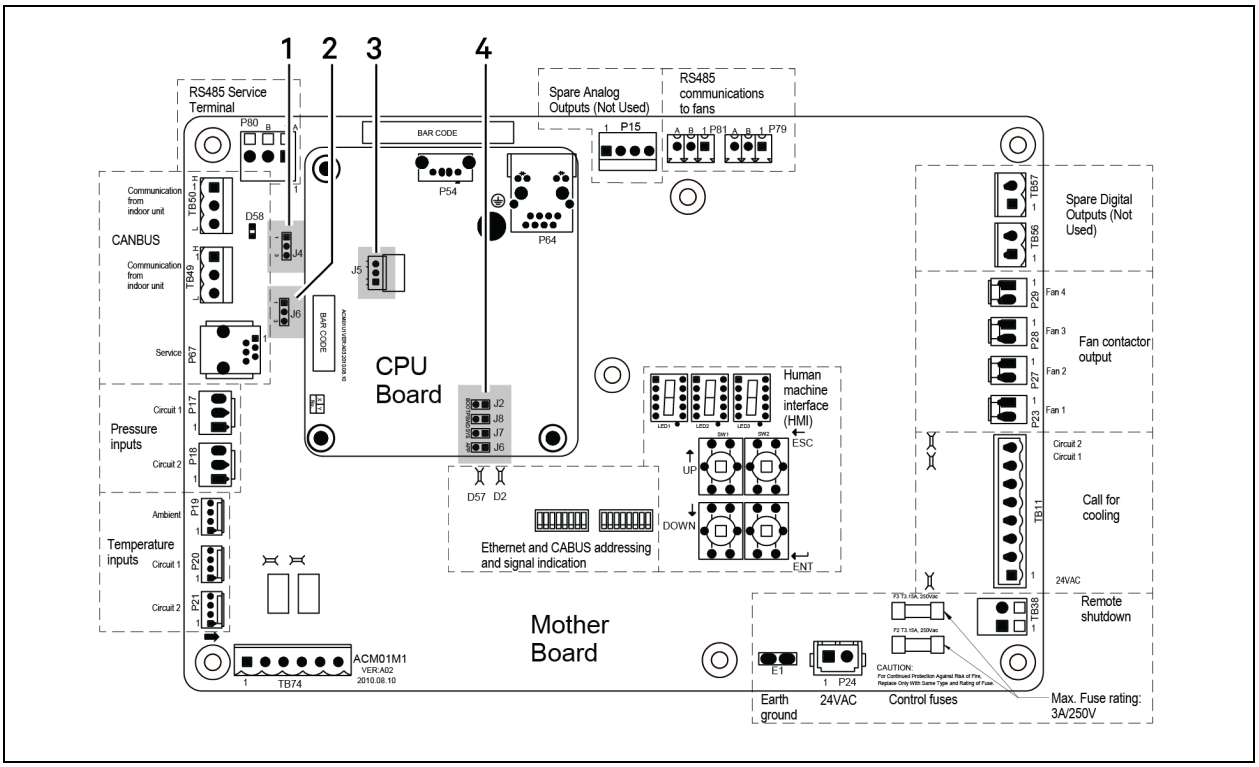

Item	Description
1	J4, RS485 service termination jumper
2	J6, Canbus termination jumper
3	J5
4	J2

11.11.2 Installing the Replacement Board

WARNING! Arc flash and electric shock hazard. Open all local and remote electric power-supply disconnect switches, verify with a voltmeter that power is Off and wear appropriate, OSHA-approved personal protective equipment (PPE) per NFPA 70E before working within the electric control enclosure. Failure to comply can cause serious injury or death. Customer must provide earth ground to unit, per NEC, CEC and local codes, as applicable. Before proceeding with installation, read all instructions, verify that all the parts are included and check the nameplate to be sure the voltage matches available utility power. The Vertiv Liebert iCOM controller does not isolate power from the unit, even in the "Unit Off" mode. Some internal components require and receive power even during the "Unit Off" mode of the Vertiv Liebert iCOM controller. The factory-supplied disconnect switch is inside the unit. The line side of this switch contains live high-voltage. The only way to ensure that there is NO voltage inside the unit is to install and open a remote disconnect switch. Refer to unit electrical schematic. Follow all local codes.

© 2026 Vertiv Group Corp.

All Rights Reserved.

NOTE: Power is On and a shock hazard exists with exposure to hazardous voltage components.

1. Access the board through the low volt end of the electric panel, record the parameter settings.
   - To obtain parameters go to the C-C menu and press the **UP** or **DOWN** arrow button to read and record the values for C03-09 and C27.
2. Record all of the DIP switch positions for the CANbus DIP switch package. Retain these for setting up the new board.
3. Record the positions of the jumpers for J2, J4, J5 and J6 on control board in the unit. Retain these for setting up the new board.
4. Disconnect all power sources to the unit at the main disconnect and the unit UPS.
5. Use a voltmeter to verify that voltage is no longer present in the unit.
6. Remove the plugs and field-installed wires from the old board. Note the polarity for the CANbus wiring going to P49 and P50, if present.
7. Mark wires P49-1, P49-3, etc, if they are not already marked.
8. Remove the mechanical fasteners holding the control board in place and remove the old control board.
9. Install the new control board using the fasteners removed in step 8.
10. Reattach the plugs. Refer to the hot-stamps on the wire harnesses that correspond to the correct plug on the board. Verify that the plugs are installed properly.
11. Change the CANbus DIP switch positions so they match the control board that was removed. If the condenser is the second condenser on the CANbus communication line, set Position 1 of the CANbus DIP switch from On to Off.
12. Change the jumper positions for J2, J4, J5 and J6 to match the control board that was removed. If the condenser is the last device on the CANbus communication line, move the jumper at J6 from Pins 2 and 3 to Pins 1 and 2 (see **Figure 11.6** on the previous page).
13. Power up the unit.
14. Change the parameters to match the parameters from the control board that was removed if they were obtained from the old board in step 1. See step 15 if the parameters were unavailable.
15. If the old board parameters were unavailable, use the new HMI label included in kit to obtain the proper settings. Parameters C03, C04, C05 and C06 must be programmed with the proper EC fan supplier used on the unit.
16. Address the fans (refer to Replacing the Condenser Fan on page 73).
17. Compare the HMI label on the unit with the latest revision.
    - If there are differences, clean and dry the surface of the old HMI label; attach the new label on top of the old label, covering the old label with the new one.
18. Verify that the control board is reading pressure and temperature.
19. Verify that there are no communication alarms with the fans or with the cooling unit the condenser is serving.
20. Verify proper fan operation by adjusting the cooling unit that this condenser serves so that it calls for cooling.

© 2026 Vertiv Group Corp.

All Rights Reserved.

11.12 Units with a Refrigeration Detection System

For units with a Refrigerant Detection System:

REFRIGERANT DETECTION SYSTEMS shall only be replaced with sensors specified by Vertiv.

A service schedule shall be made to verify the safety systems of the appliance are working as intended, at a minimum interval.

A design failure mode and effects analysis of the circulation airflow path must be conducted, in the ITE (Information Technology Equipment) AREA, to ensure the airflow velocity is at least 1 m/s for all operating conditions expected for the life of the ITE AREA.

Vertiv models with A2L refrigerants provide an output signal for use in notifying the user that a REFRIGERANT DETECTION SYSTEM has been activated. The user shall provide a notification means of receiving the output signal. If this signal is used for an alarm, the alarm shall comply with all national and local codes.

11.13 Qualification of Workers

The manual shall contain specific information about the required qualification of the working personnel for maintenance, service and repair operations. Every working procedure that affects safety means shall only be carried out by competent persons.

Examples for such working procedures are:

- Breaking into the refrigerating circuit
- Opening of sealed components
- Opening of ventilated enclosures

Information of procedures additional to usual information for refrigerating appliance installation, repair, maintenance and decommission procedures is required when an appliance with FLAMMABLE REFRIGERANTS is affected.

The achieved competence should be documented by a certificate.

11.14 Information on Servicing

Checks to the Area

Prior to beginning work on systems containing FLAMMABLE REFRIGERANTS, safety checks are necessary to ensure that the risk of ignition is minimized. For repair to the REFRIGERATING SYSTEM, the following checks to the area shall be completed prior to conducting work on the system.

Work Procedure

Work shall be undertaken under a controlled procedure so as to minimize the risk of a flammable gas or vapor being present while the work is being performed.

General Work Area

All maintenance staff and others working in the local area shall be instructed on the nature of work being carried out. Work in confined spaces shall be avoided.

© 2026 Vertiv Group Corp.

All Rights Reserved.

Checking for Presence of Refrigerant

The area shall be checked with an appropriate refrigerant detector prior to and during work, to ensure the technician is aware of potentially toxic or flammable atmospheres. Ensure that the leak detection equipment being used is suitable for use with all applicable refrigerants, i.e. non-sparking, adequately sealed or intrinsically safe.

Presence of Fire Extinguisher

If any hot work is to be conducted on the refrigerating equipment or any associated parts, appropriate fire extinguishing equipment shall be available to hand. Have a dry powder or CO2 fire extinguisher adjacent to the charging area.

No Ignition Sources

No person carrying out work in relation to a REFRIGERATING SYSTEM which involves exposing any pipe work shall use any sources of ignition in such a manner that it may lead to the risk of fire or explosion. All possible ignition sources, including cigarette smoking, should be kept sufficiently far away from the site of installation, repairing, removing and disposal, during which refrigerant can possibly be released to the surrounding space. Prior to work taking place, the area around the equipment is to be surveyed to make sure that there are no flammable hazards or ignition risks. “No Smoking” signs shall be displayed.

Ventilated Area

Ensure that the area is in the open or that it is adequately ventilated before breaking into the system or conducting any hot work. A degree of ventilation shall continue during the period that the work is carried out. The ventilation should safely disperse any released refrigerant and preferably expel it externally into the atmosphere.

Checks to the Refrigerating Equipment

Where electrical components are being changed, they shall be fit for the purpose and to the correct specification. At all times the manufacturer’s maintenance and service guidelines shall be followed. If in doubt, consult the manufacturer’s technical department for assistance.

The following checks shall be applied to installations using FLAMMABLE REFRIGERANTS:

- The actual REFRIGERANT CHARGE is in accordance with the room size within which the refrigerant containing parts are installed.
- The ventilation machinery and outlets are operating adequately and are not obstructed.
- Marking to the equipment continues to be visible and legible. Markings and signs that are illegible shall be corrected.
- Refrigerating pipe or components are installed in a position where they are unlikely to be exposed to any substance which may corrode refrigerant containing components, unless the components are constructed of materials which are inherently resistant to being corroded or are suitably protected against being so corroded.

© 2026 Vertiv Group Corp.

All Rights Reserved.

Checks to Electrical Devices

Repair and maintenance to electrical components shall include initial safety checks and component inspection procedures. If a fault exists that could compromise safety, then no electrical supply shall be connected to the circuit until it is satisfactorily dealt with. If the fault cannot be corrected immediately but it is necessary to continue operation, an adequate temporary solution shall be used. This shall be reported to the owner of the equipment so all parties are advised.

Initial safety checks shall include:

- That capacitors are discharged: this shall be done in a safe manner to avoid possibility of sparking.
- That no live electrical components and wiring are exposed while charging, recovering or purging the system.
- That there is continuity of earth bonding.

Cabling

Check that cabling will not be subject to wear, corrosion, excessive pressure, vibration, sharp edges or any other adverse environmental effects. The check shall also take into account the effects of aging or continual vibration from sources such as compressors or fans.

Detection of Flammable Refrigerants

Under no circumstances shall potential sources of ignition be used in the searching for or detection of refrigerant leaks. A halide torch (or any other detector using a naked flame) shall not be used.

The following leak detection methods are deemed acceptable for all refrigerant systems.

Electronic leak detectors may be used to detect refrigerant leaks but, in the case of FLAMMABLE REFRIGERANTS, the sensitivity may not be adequate, or may need re-calibration. (Detection equipment shall be calibrated in a refrigerant-free area.) Ensure that the detector is not a potential source of ignition and is suitable for the refrigerant used. Leak detection equipment shall be set at a percentage of the LFL of the refrigerant and shall be calibrated to the refrigerant employed, and the appropriate percentage of gas (25 % maximum) is confirmed.

Leak detection fluids are also suitable for use with most refrigerants but the use of detergents containing chlorine shall be avoided as the chlorine may react with the refrigerant and corrode the copper pipe-work.

Examples of leak detection fluids are:

- Bubble method
- Fluorescent method agents

If a leak is suspected, all naked flames shall be removed/extinguished.

If a leakage of refrigerant is found which requires brazing, all of the refrigerant shall be recovered from the system, or isolated (by means of shut off valves) in a part of the system remote from the leak. Removal of refrigerant shall be according to Clause DD.9.

© 2026 Vertiv Group Corp.

All Rights Reserved.

Removal and Evacuation

When breaking into the refrigerant circuit to make repairs – or for any other purpose – conventional procedures shall be used. However, for flammable refrigerants it is important that best practice be followed, since flammability is a consideration.

The following procedure shall be adhered to:

- Safely remove refrigerant following local and national regulations.
- Evacuate (optional for A2L); continuously flush or purge with inert gas when using flame to open circuit; and open the circuit.

The refrigerant charge shall be recovered into the correct recovery cylinders if venting is not allowed by local and national codes. For appliances containing flammable refrigerants, the system shall be purged with oxygen-free nitrogen to render the appliance safe for flammable refrigerants. This process might need to be repeated several times. Compressed air or oxygen shall not be used for purging refrigerant systems.

For appliances containing flammable refrigerants, refrigerants purging shall be achieved by breaking the vacuum in the system with oxygen-free nitrogen and continuing to fill until the working pressure is achieved, then venting to atmosphere, and finally pulling down to a vacuum (optional for A2L). This process shall be repeated until no refrigerant is within the system (optional for A2L). When the final oxygen-free nitrogen charge is used, the system shall be vented down to atmospheric pressure to enable work to take place.

The outlet for the vacuum pump shall not be close to any potential ignition sources, and ventilation shall be available.

Charging Procedures

In addition to conventional charging procedures, the following requirements shall be followed:

- Ensure that contamination of different refrigerants does not occur when using charging equipment. Hoses or lines shall be as short as possible to minimize the amount of refrigerant contained in them.
- Cylinders shall be kept in an appropriate position according to the instructions.
- Ensure that the REFRIGERATING SYSTEM is earthed prior to charging the system with refrigerant.
- Label the system when charging is complete (if not already).
- Extreme care shall be taken not to overfill the REFRIGERATING SYSTEM.

Prior to recharging the system, it shall be pressure-tested with the appropriate purging gas. The system shall be leak-tested on completion of charging but prior to commissioning. A follow up leak test shall be carried out prior to leaving the site.

Decommissioning

Before carrying out this procedure, it is essential that the technician is completely familiar with the equipment and all its detail. It is recommended good practice that all refrigerants are recovered safely. Prior to the task being carried out, an oil and refrigerant sample shall be taken in case analysis is required prior to re-use of recovered refrigerant. It is essential that electrical power is available before the task is commenced.

1. Become familiar with the equipment and its operation.
2. Isolate system electrically.

© 2026 Vertiv Group Corp.

All Rights Reserved.

3. Before attempting the procedure, ensure that:
    a. Mechanical handling equipment is available, if required, for handling refrigerant cylinders.
    b. All personal protective equipment is available and being used correctly.
    c. The recovery process is supervised at all times by a competent person.
    d. Recovery equipment and cylinders conform to the appropriate standards.
4. Pump down refrigerant system, if possible.
5. If a vacuum is not possible, make a manifold so that refrigerant can be removed from various parts of the system.
6. Make sure that cylinder is situated on the scales before recovery takes place.
7. Start the recovery machine and operate in accordance with instructions.
8. Do not overfill cylinders (no more than 80 % volume liquid charge).
9. Do not exceed the maximum working pressure of the cylinder, even temporarily.
10. When the cylinders have been filled correctly and the process completed, make sure that the cylinders and the equipment are removed from site promptly and all isolation valves on the equipment are closed off.
11. Recovered refrigerant shall not be charged into another REFRIGERATING SYSTEM unless it has been cleaned and checked.

Labeling

Equipment shall be labeled stating that it has been de-commissioned and emptied of refrigerant. The label shall be dated and signed. For appliances containing FLAMMABLE REFRIGERANTS, ensure that there are labels on the equipment stating the equipment contains FLAMMABLE REFRIGERANT.

Recovery

When removing refrigerant from a system, either for servicing or decommissioning, it is recommended good practice that all refrigerants are removed safely.

When transferring refrigerant into cylinders, ensure that only appropriate refrigerant recovery cylinders are employed. Ensure that the correct number of cylinders for holding the total system charge is available. All cylinders to be used are designated for the recovered refrigerant and labeled for that refrigerant (i.e. special cylinders for the recovery of refrigerant). Cylinders shall be complete with pressure-relief valve and associated shut-off valves in good working order. Empty recovery cylinders are evacuated and, if possible, cooled before recovery occurs.

The recovery equipment shall be in good working order with a set of instructions concerning the equipment that is at hand and shall be suitable for the recovery of the flammable refrigerant. If in doubt, the manufacturer should be consulted. In addition, a set of calibrated weighing scales shall be available and in good working order. Hoses shall be complete with leak free disconnect couplings and in good condition.

The recovered refrigerant shall be processed according to local legislation in the correct recovery cylinder, and the relevant waste transfer note arranged. Do not mix refrigerants in recovery units and especially not in cylinders.

If compressors or compressor oils are to be removed, ensure that they have been evacuated to an acceptable level to make certain that flammable refrigerant does not remain within the lubricant. The compressor body shall not be heated by an open flame or other ignition sources to accelerate this process. When oil is drained from a system, it shall be carried out safely.

© 2026 Vertiv Group Corp.

All Rights Reserved.

This page intentionally left blank

© 2026 Vertiv Group Corp.
All Rights Reserved.

12 Preventive Maintenance Checklist

Inspection Date		Job Name	
Unit Model #		Unit Serial Number #	
Room Temperature/Humidity	° %	Ambient Temperature	°

Not all units will have all components. To determine your unit's configuration, compare the Unit Model # above above and the information in the Components and Nomenclature section.

Good maintenance practices are essential to minimizing operation cost and maximizing product life. Read and follow all applicable maintenance checks listed below. At a minimum, these checks should be performed semi-annually. However, maintenance intervals may need to be more frequent based on site-specific conditions. Review the unit user manual and the Vertiv™ Liebert® iCOM™ User Manual (SL-31075) for further information on unit operation. We recommend the use of trained and authorized service personnel, extended service contracts, and factory-certified replacement parts. Contact your local sales representative for more details.

***Check all that apply*:**

Evaporator/Filters

1. Check/Replace filters
2. Wipe section clean
3. Coil clean
4. Clean condensate pan
5. Check/Test filter-clog switch operation

Blower Section (evaporator fans)

1. Mounting bolts tight
2. Blower wheels free of debris and spins freely
3. Motor bearings in good condition and lubricated.
4. Check motor mount
5. Check/Test air sail switch
6. Motor amp draw
   - Compare to nameplate amps

#1	L1	L2	L3
#2	L1	L2	L3
#3	L1	L2	L3
#4	L1	L2	L3

Electrical Panel

1. Check fuses
2. Check contactors for pitting (Replace if pitted)
3. Check/Re-torque wire connections

© 2026 Vertiv Group Corp.
All Rights Reserved.

Controls

1. Check/Verify control operation (Sequence)
2. Check/Test changeover device(s) (if equipped)

Compressors

1. Check oil level
2. Check for oil leaks
3. Check compressor mounts (bushings)
4. Cap tubes (not rubbing)
5. Check/Re-torque wire connections (inside compressor box)
6. Compressor operation (vibration/noise)
7. Check crank-case heater fuses/operation (if equipped)
8. Check for refrigerant leaks

9. Suction pressure	Circuit #1	Circuit #2
10. Discharge Pressure	Circuit #1	Circuit #2
11. Superheat	Circuit #1	Circuit #2
12. Low-pressure switch cut out	Circuit #1	Circuit #2
13. Low pressure cut in	Circuit #1	Circuit #2
14. High pressure cut out	Circuit #1	Circuit #2

15. Amp draw

Compressor #1A	L1	L2	L3
Compressor #1B	L1	L2	L3
Compressor #2A	L1	L2	L3
Compressor #2B	L1	L2	L3
Compressor #3A	L1	L2	L3
Compressor #3B	L1	L2	L3
Compressor #4A	L1	L2	L3
Compressor #4B	L1	L2	L3

16. Verify proper oil in compressor by using procedure outlined in Verifying Additional Oil Charge on page 32 .

© 2026 Vertiv Group Corp.
All Rights Reserved.

Condenser

1. Coil clean
2. Fans free of debris
3. Fans securely mounted
4. Motor bearings in good condition
5. Check all refrigerant lines for vibration isolation. Support as necessary
6. Check for refrigerant leaks
7. Check surge-protection device (if installed) status-indicator lights
8. Check/Re-torque wire connections
9. Check contactors for pitting (replace if pitted)
10. Verify operation sequence/set points
11. Charge verification:
    a. Outdoor Ambient Temperature _____
    b. Subcooling _____
    c. Indoor-unit Return-air Temperature _____
    d. Sight-glass level (if Vertiv Liebert Lee-Temp or pumped refrigerant) _____
12. Motor amp draw

#1	L1	L2	L3
#2	L1	L2	L3
#3	L1	L2	L3
#4	L1	L2	L3
#5	L1	L2	L3
#6	L1	L2	L3
#7	L1	L2	L3
#8	L1	L2	L3
#9	L1	L2	L3
#10	L1	L2	L3
#11	L1	L2	L3
#12	L1	L2	L3

Pumped Refrigerant Economizer

1. Check for refrigerant leaks
2. Check/Re-torque wire connections
3. Check contactors for pitting (replace if pitted)
4. Verify pump-speed control operation
5. Check pump mounting

© 2026 Vertiv Group Corp.
All Rights Reserved.

MAINTENANCE NOTES

Name

Signature

Company

Make photocopies for your records. Compare readings/information to previous maintenance worksheet.

To locate your local Vertiv representative for Vertiv-engineered parts, check https://www.Vertiv.com/en-us/support/ or Call 1-800-543-2778.

© 2026 Vertiv Group Corp.

All Rights Reserved.

Appendices

Appendix A: Technical Support and Contacts

A.1 Technical Support/Service in the United States

Vertiv Group Corporation

24x7 dispatch of technicians for all products.

1-800-543-2378

Vertiv Thermal Management Products

1-800-543-2378

Vertiv Channel Products

1-800-222-5877

Vertiv AC and DC Power Products

1-800-543-2378

A.2 Locations

United States

Vertiv Headquarters

505 N. Cleveland Ave.

Westerville, OH 43082, USA

Europe

Via Leonardo Da Vinci 8 Zona Industriale Tognana

35028 Piove Di Sacco (PD) Italy

Asia

7/F, Dah Sing Financial Centre

3108 Gloucester Road

Wanchai, Hong Kong

© 2026 Vertiv Group Corp.

All Rights Reserved.

This page intentionally left blank

© 2026 Vertiv Group Corp.
All Rights Reserved.

Appendix B: DH400 Motor Maintenance

NOTE: Verify all parts received before starting kit. Contact your local sales rep if there are missing parts.

Purpose

Every year from DH400 start-up the motor bearings should be lubricated. This document is to give instruction on how to replace lubrication.

WARNING! Arc flash and electric shock hazard. Disconnect all local and remote electric power supplies and wear appropriate personal protective equipment per NFPA 70E-2012 before working within the electric enclosure. Failure to comply can cause serious injury or death.

WARNING! This kit should be installed by qualified personnel only.

CAUTION: Risk of improper moving, lifting and handling. Can cause equipment damage or injury. Only properly trained and qualified personnel should work on this equipment. Fan modules may weigh in excess of 150 pounds each and will require more than one person or a mechanical lifting device to raise or lower the fan(s) safely. Use proper lifting techniques and wear protective clothing, gloves, shoes and head gear to avoid injury and dropping the fan module during removal.

CAUTION: Equipment used in handling/lifting, and/or installing the fan assembly must meet OSHA requirements. Use handling/lifting equipment rated for the weight of the fan assembly. Use ladders rated for the weight of the fan assembly and technicians if used during installation. Refer to handling/lifting, and/or installation equipment operating manual for manufacturer's safety requirements and operating procedures.

Tools

- OSHA approved ladder and all required fall arrest equipment
- Grease pan or equivalent for catching grease drainage
- Exxon Polyrex EM grease Vertiv part 341166P1

Steps

1. Turn off power on unit from Disconnect.
2. Lockout power to unit.
3. Person performing work must observe best safety practices including safety harness in order to tie off. See Figure B.1 on the next page . It is the responsibility of individual performing work to adhere and tie off per OSHA approved requirements.

© 2026 Vertiv Group Corp.

All Rights Reserved.

Figure B.1 DH400 Tie Off Points

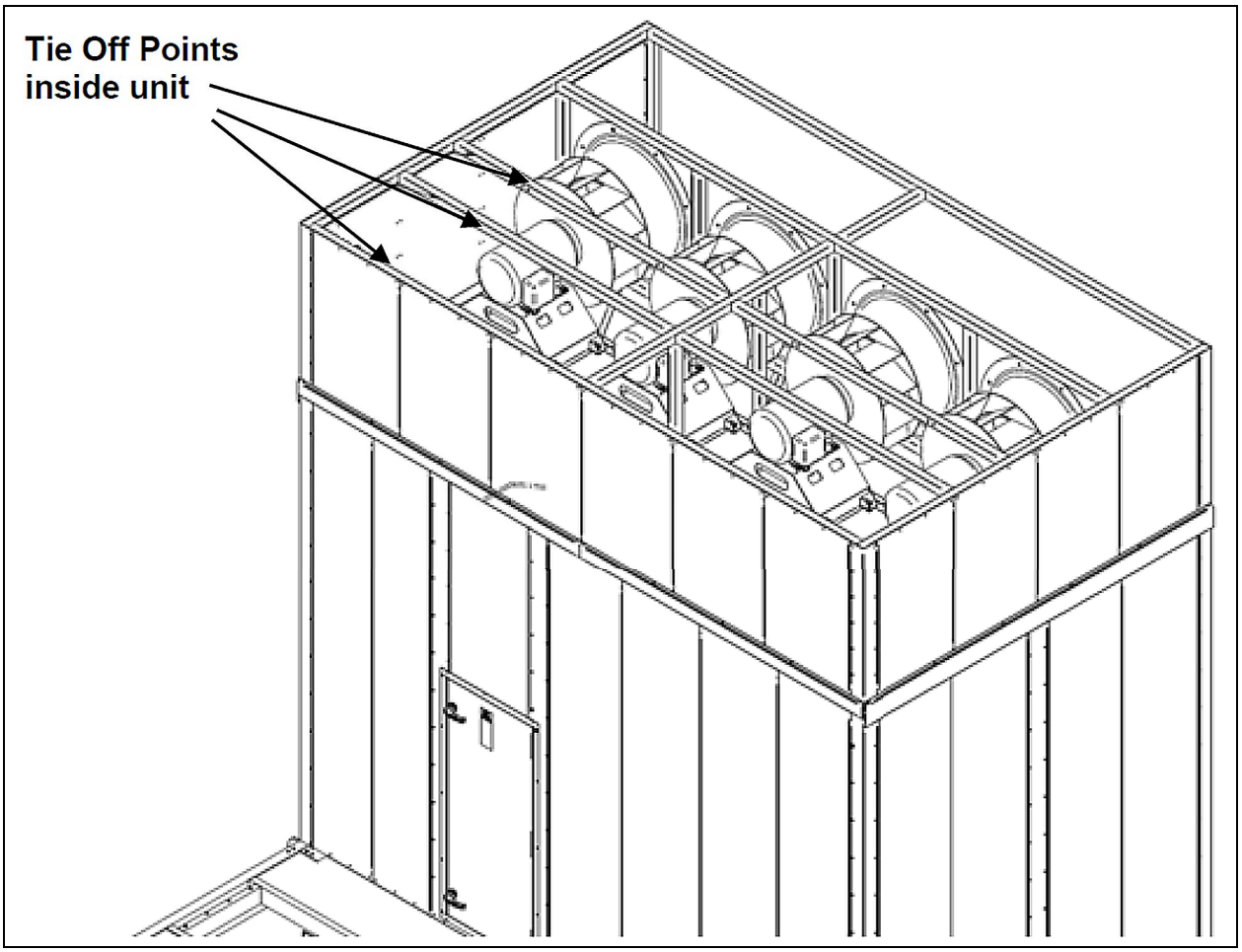

4. Remove front exterior panels on unit to access Motor section. For DH400, work will be performed from platform located in evaporator section of unit. See Figure B.2 on the facing page

© 2026 Vertiv Group Corp.

All Rights Reserved.

Figure B.2 DH400 Platform

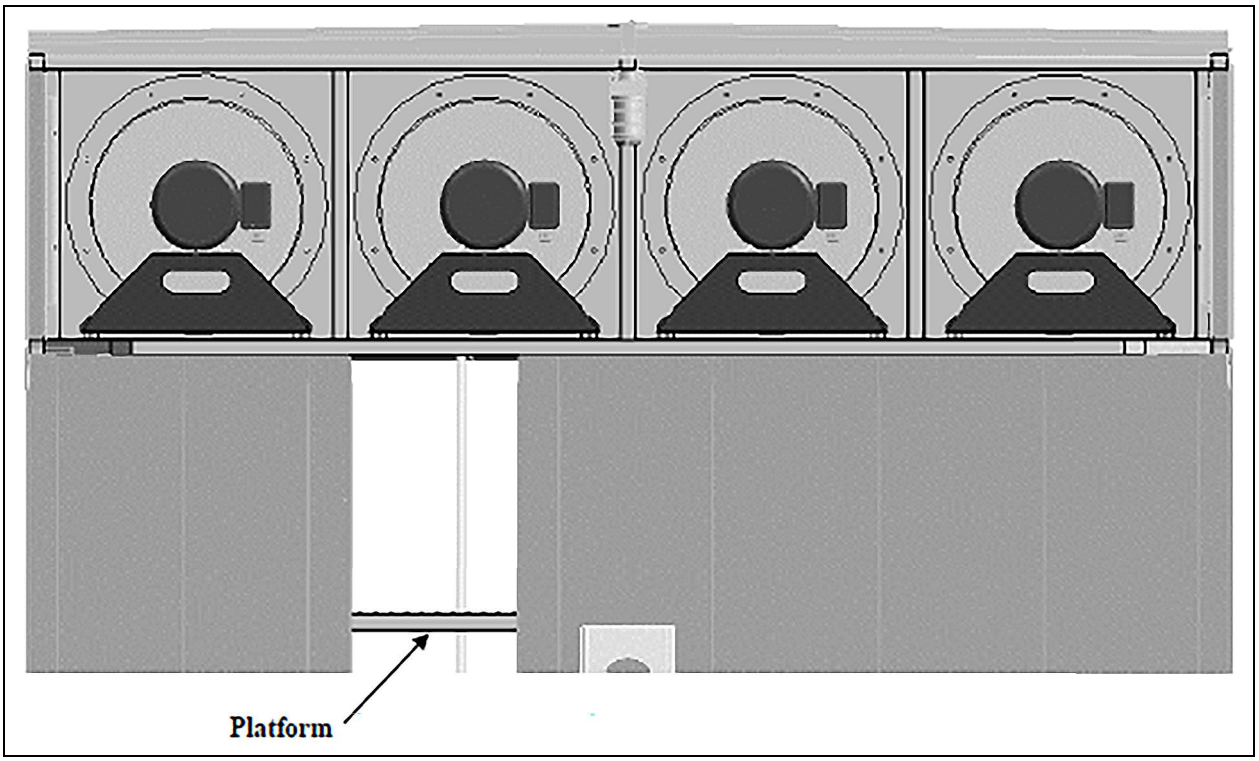

5. Locate the grease inlet plug on motor shaft end. See Figure B.3 below .

Figure B.3 Figure B.5 DH400 Grease Inlet Plug

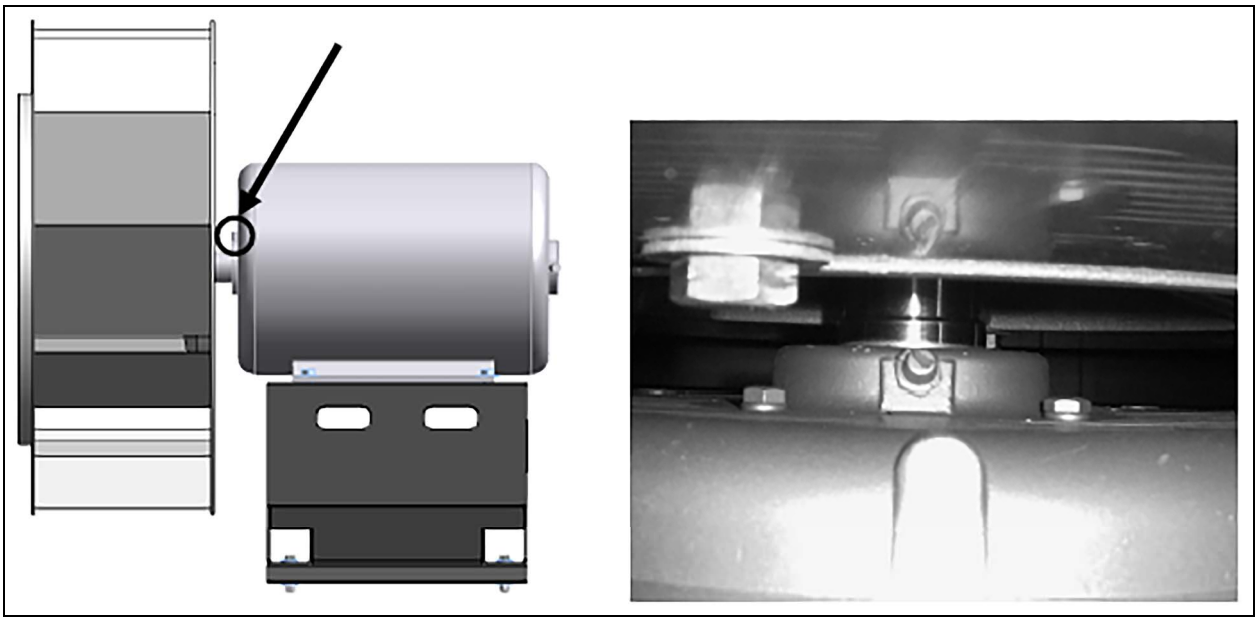

© 2026 Vertiv Group Corp.

All Rights Reserved.

6. Clean the area around grease inlet and replace pipe plug with a grease fitting.
7. Need to have grease pan or equivalent under motor to catch drainage.
8. Locate and remove the grease drain plug. See Figure B.4 below

Figure B.4 DH400 Remove the Grease Drain Plug

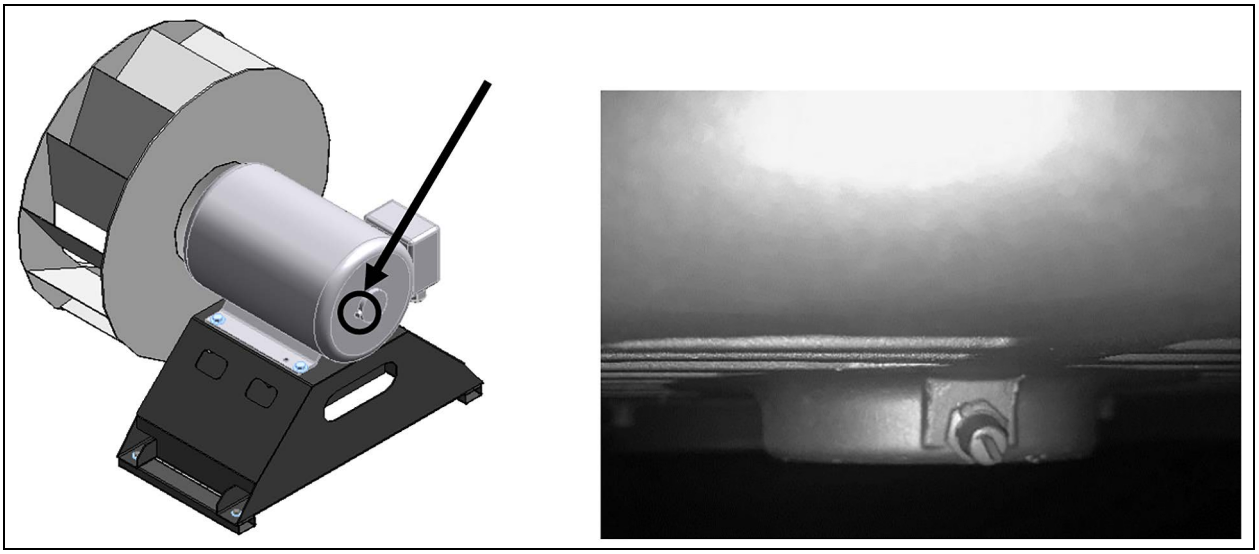

9. While slowly rotating the shaft, add 0.47 ounces of grease to the inlet port.
10. Replace grease inlet plug and unlock unit power and power on unit to run motor.
11. Run the motor for 15 minutes.
12. Replace the grease drain plug.
13. Clean area from any grease dripping and remove tools.
14. Install front exterior panels on motor section of unit.
15. Remove any power lockout and restore unit power to be fully functional.

Source: INST-9317

© 2026 Vertiv Group Corp.

All Rights Reserved.

Appendix C: Submittal Drawings

The submittal drawings are in the order of document part number (DPN). Table C.1 below , groups the drawings by topic/application.

Table C.1 Submittal Drawings Contents

Document Number	Title
Component Location	
20000202	Component Location, 400kW Hybrid Perimeter Unit
Airflow Schematics	
20000133	Airflow Schematic, 400kW Hybrid Perimeter Unit
Planning Dimensions	
20000209	Cabinet and Anchor Dimensional Data 400kW Hybrid Perimeter Unit
20000213	Drip Pan Cleanout Access and Location 400kW Hybrid Perimeter Unit
20000212	Equipment Floor Plan 400kW Hybrid Perimeter Unit
Piping Schematics (General Arrangement)	
20000215	Piping Schematic, 400kW Hybrid Perimeter Unit
Electrical Connections	
20000214	Electrical Field Connections 400kW Hybrid Perimeter Unit
20000118	Electrical Field Connections DP 400/500
Electrical Data	
20000217	Electrical Data Packaged Units
Rigging Instructions	
20000210	Rigging Instructions 400kW Hybrid Perimeter Unit
Liquid Cooling Conversion	
20000223	Liquid Cooling Conversion, 400kW Hybrid Perimeter Unit

© 2026 Vertiv Group Corp.

All Rights Reserved.

This page intentionally left blank

© 2026 Vertiv Group Corp.

All Rights Reserved.

COOLPHASE FLEX

COMPONENT LOCATION DIAGRAM

400kW HYBRID PERIMETER UNIT

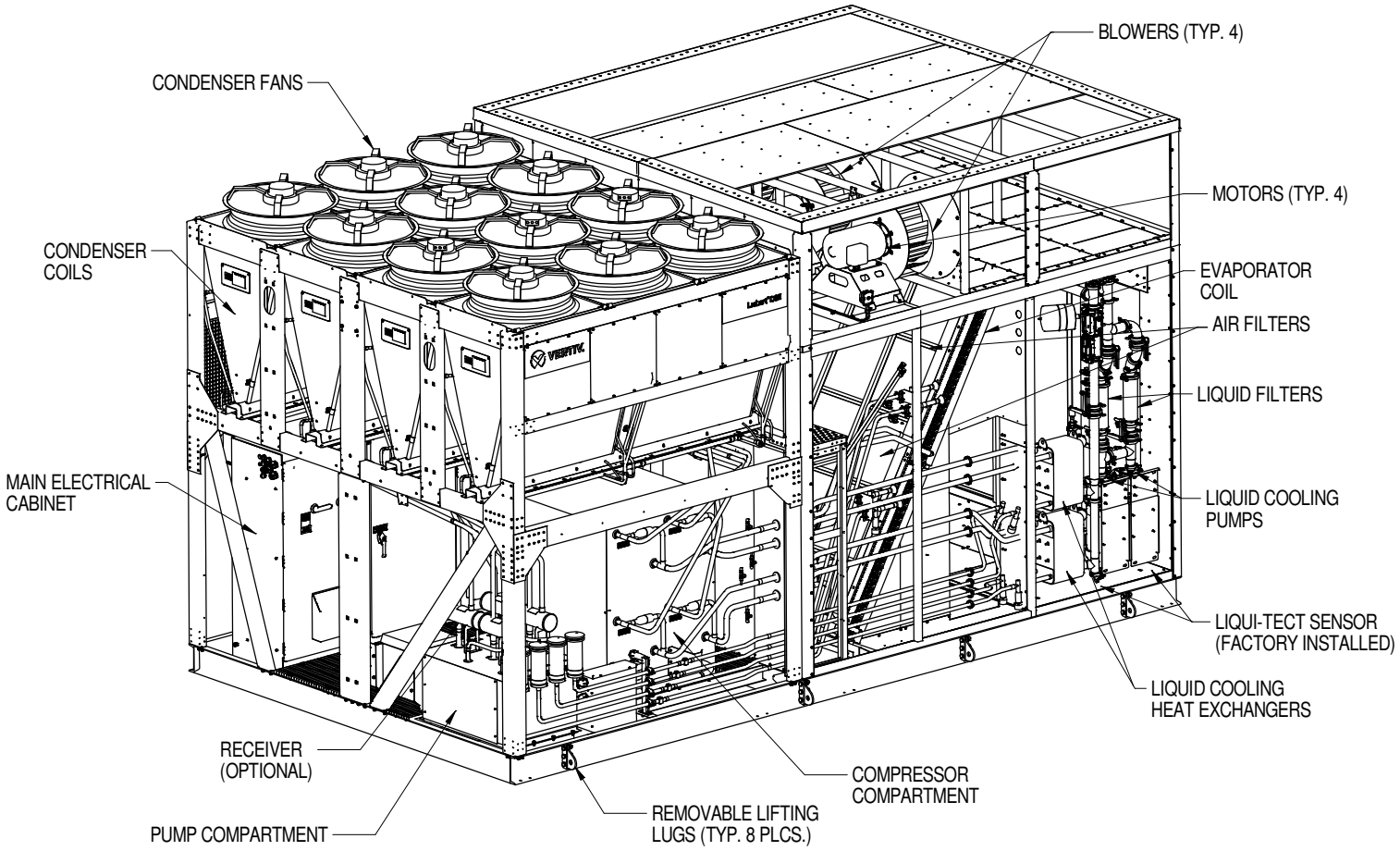

Notes:

1. Some parts are not shown for clarity.

COOLPHASE FLEX

COMPONENT LOCATION DIAGRAM

400kW HYBRID PERIMETER UNIT

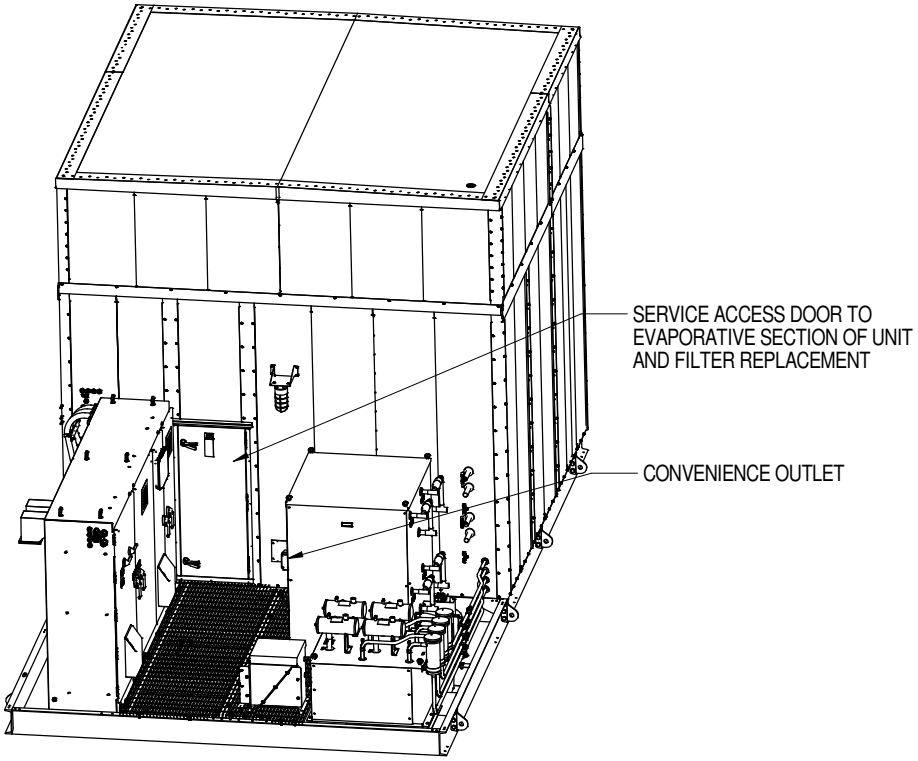

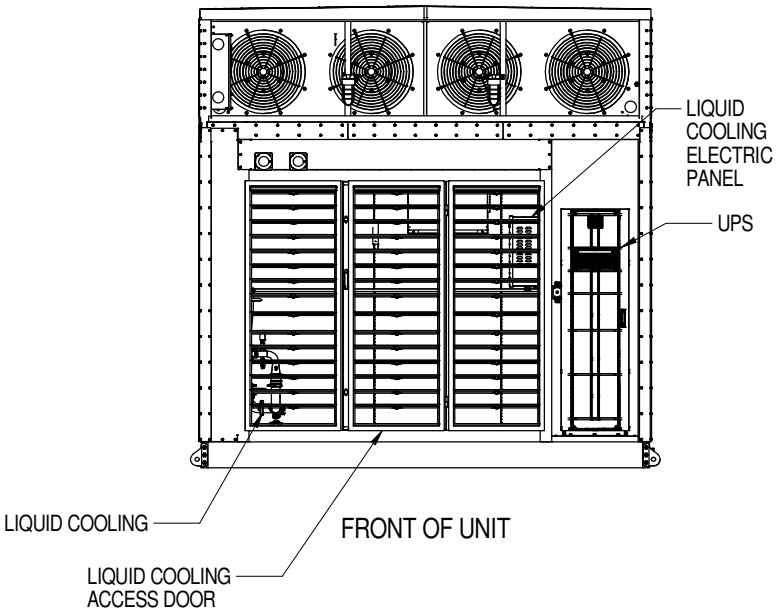

Notes:

1. Some parts are not shown for clarity.

COOLPHASE FLEX

AIRFLOW SCHEMATIC
400kW HYBRID PERIMETER UNIT

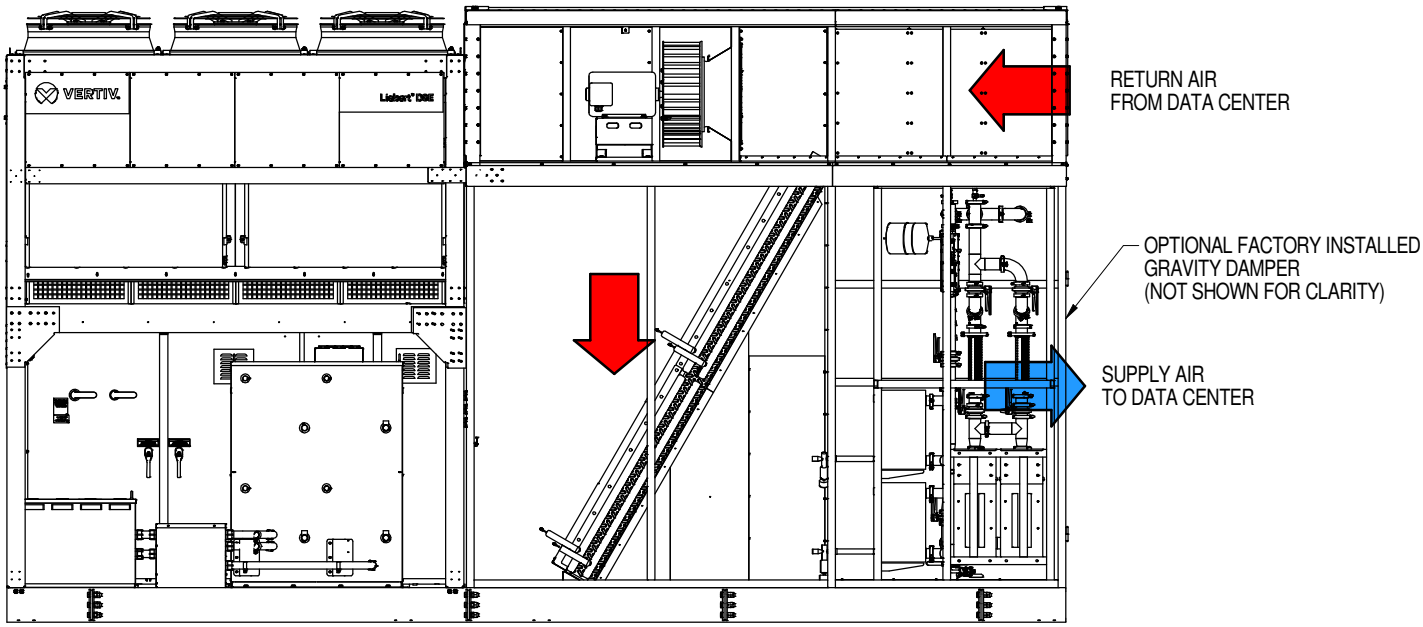

LEFT SIDE OF UNIT (PARTS HIDDEN FOR CLARITY)

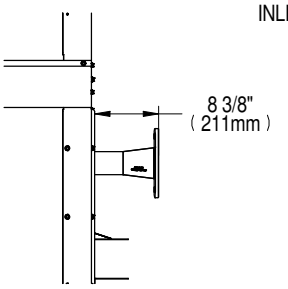

SIDE VIEW
LIQUID COOLING INLET/OUTLET

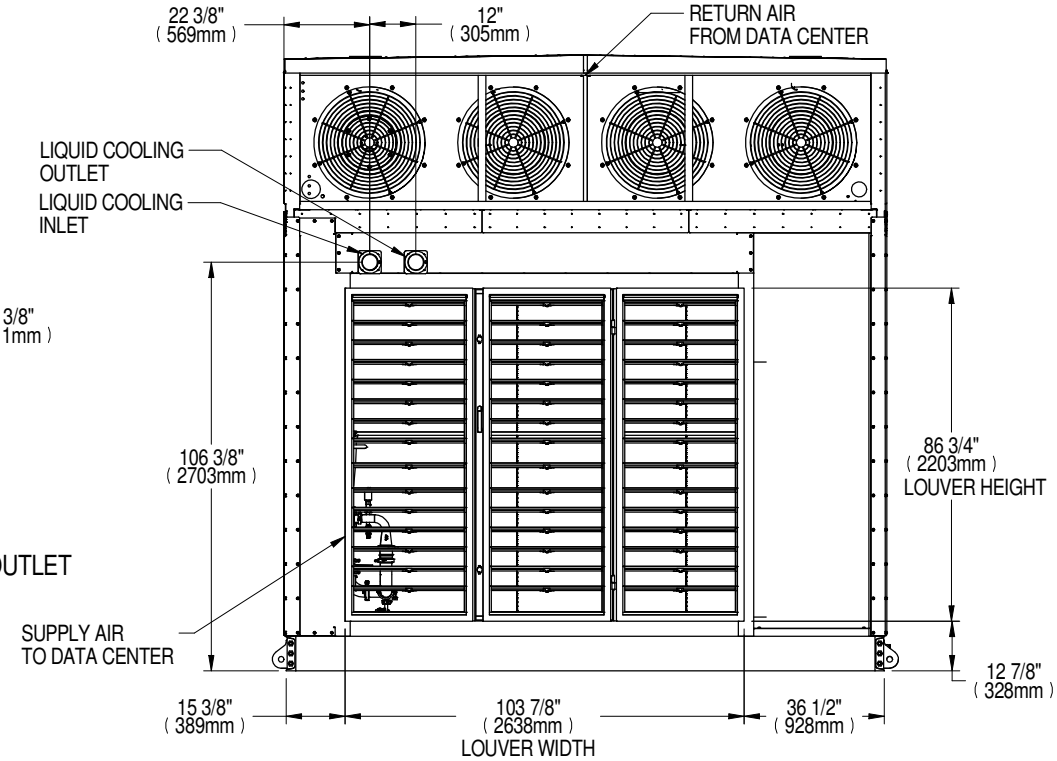

FRONT OF UNIT (PARTS HIDDEN FOR CLARITY)

Notes:

1. Duct Flange supplied by others.
2. Seal all ducts.
3. Available space to attach duct flange without Gravity Damper is 3 1/2" (89mm)

COOLPHASE FLEX

AIRFLOW SCHEMATIC
400kW HYBRID PERIMETER UNIT

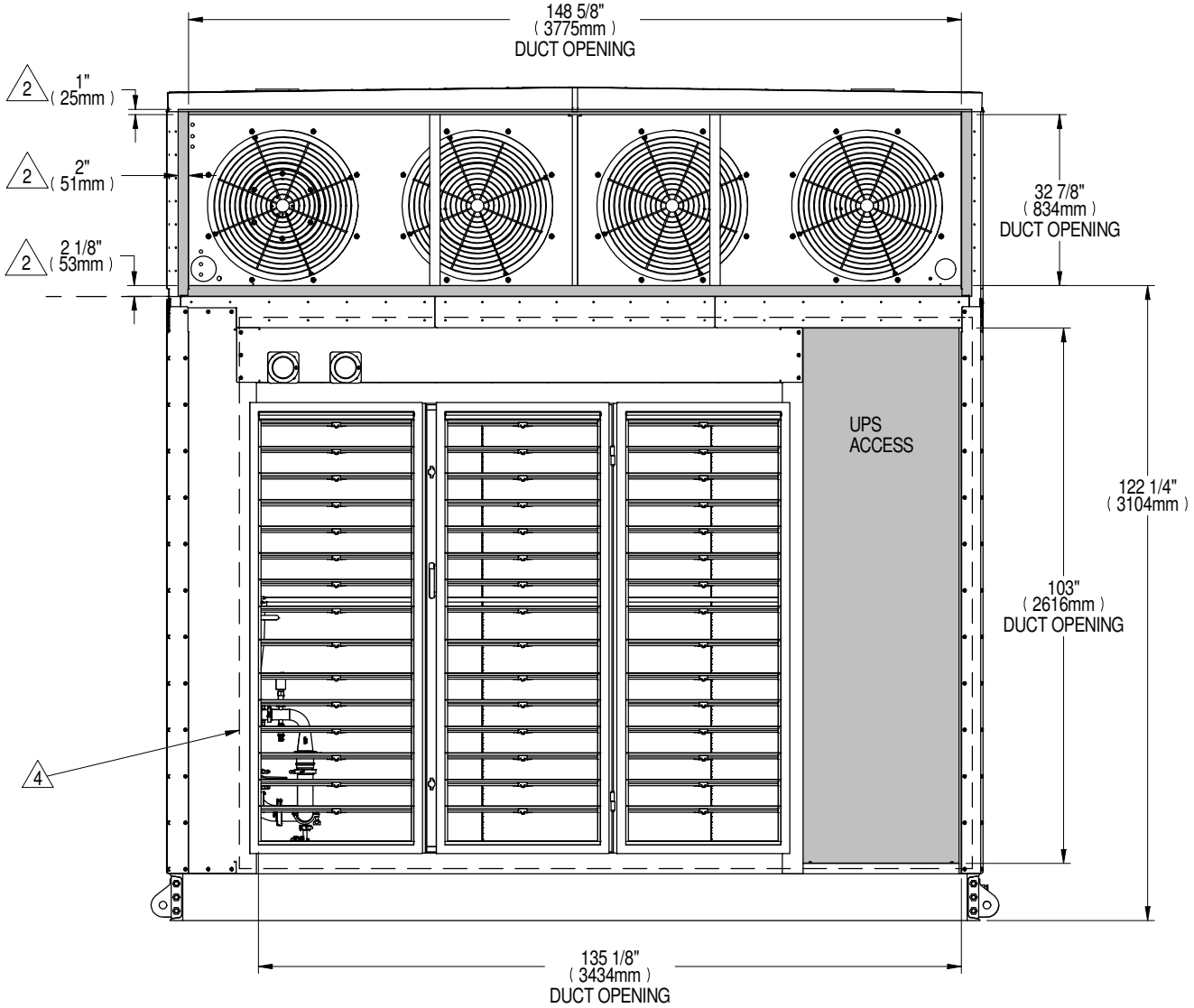

FRONT OF UNIT (PARTS HIDDEN FOR CLARITY)
RETURN DUCT OPENING

Notes:

1. Duct Flange supplied by others.
2. Perimeter available to attach Return Duct Flange.
3. Seal all ducts.
4. Perimeter available to attach Supply Duct Flange.

COOLPHASE FLEX

CABINET & ANCHOR DIMENSIONAL DATA

400kW HYBRID PERIMETER UNIT

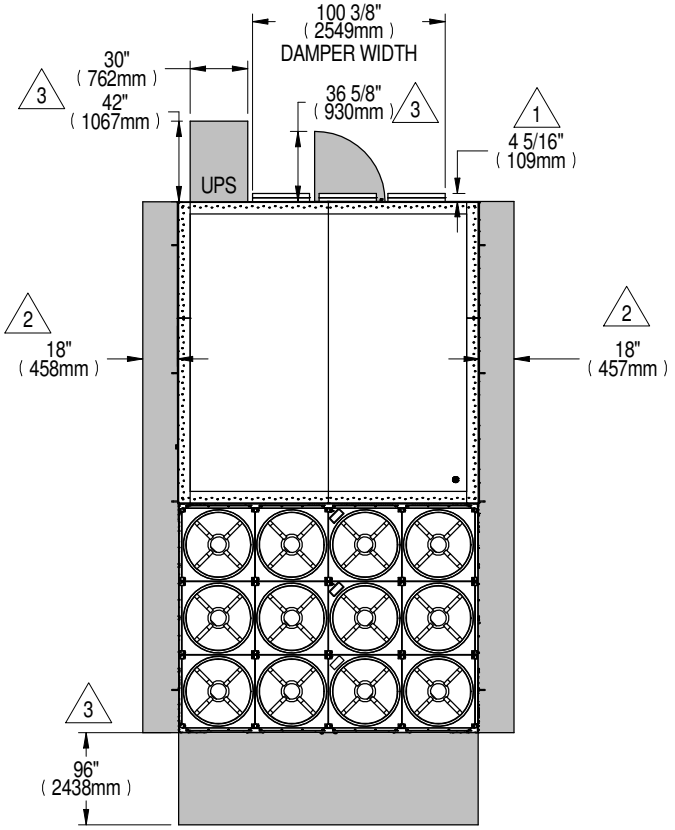

TOP OF UNIT

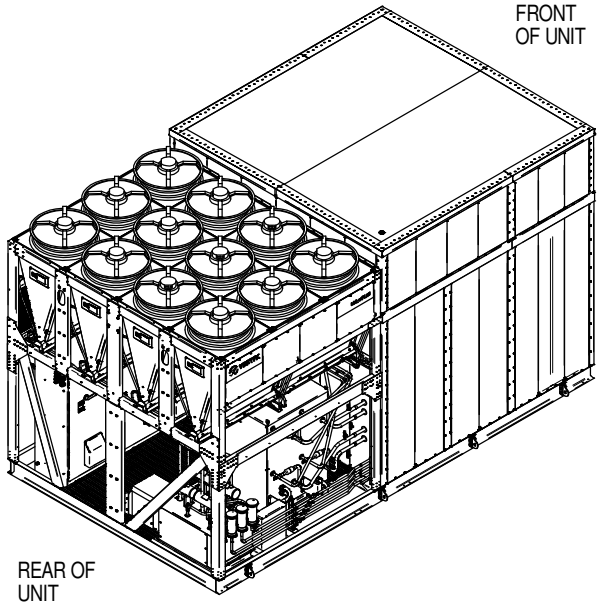

NOTES:

1. SHADED AREA INDICATES RECOMMENDED MINIMUM CLEARANCE FOR OPTIONAL GRAVITY DAMPER.

2. SHADED AREA INDICATES RECOMMENDED MINIMUM CLEARANCE BETWEEN UNITS TO ALLOW ACCESS FOR ANCHORAGE INSTALLATION FOR FULL WIND AND SEISMIC PERFORMANCE. MINIMUM 8" IS NEEDED FOR UNIT OPERATION.

3. SHADED AREA INDICATES MINIMUM CLEARANCE FOR COMPONENT ACCESS. (NOT TO SCALE)

4. 20' (6 m) IS THE RECOMMENDED MINIMUM CLEARANCE TO BE PROVIDED TO REMOVE EVAPORATOR COIL.

5. SOME COMPONENTS SHOWN MAY NOT BE INCLUDED, REFER TO SPECIFIC ORDER DETAILS

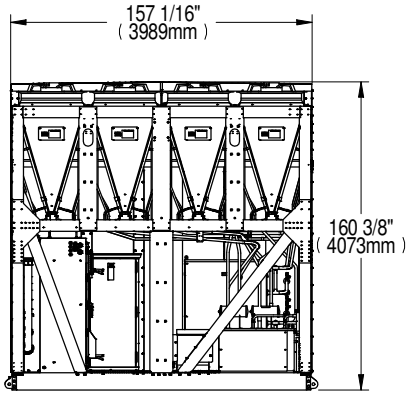

REAR OF UNIT

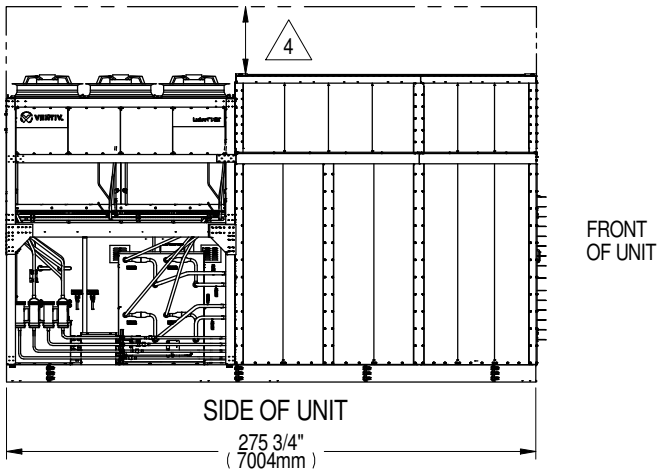

SIDE OF UNIT

COOLPHASE FLEX

CABINET & ANCHOR DIMENSIONAL DATA

400kW HYBRID PERIMETER UNIT

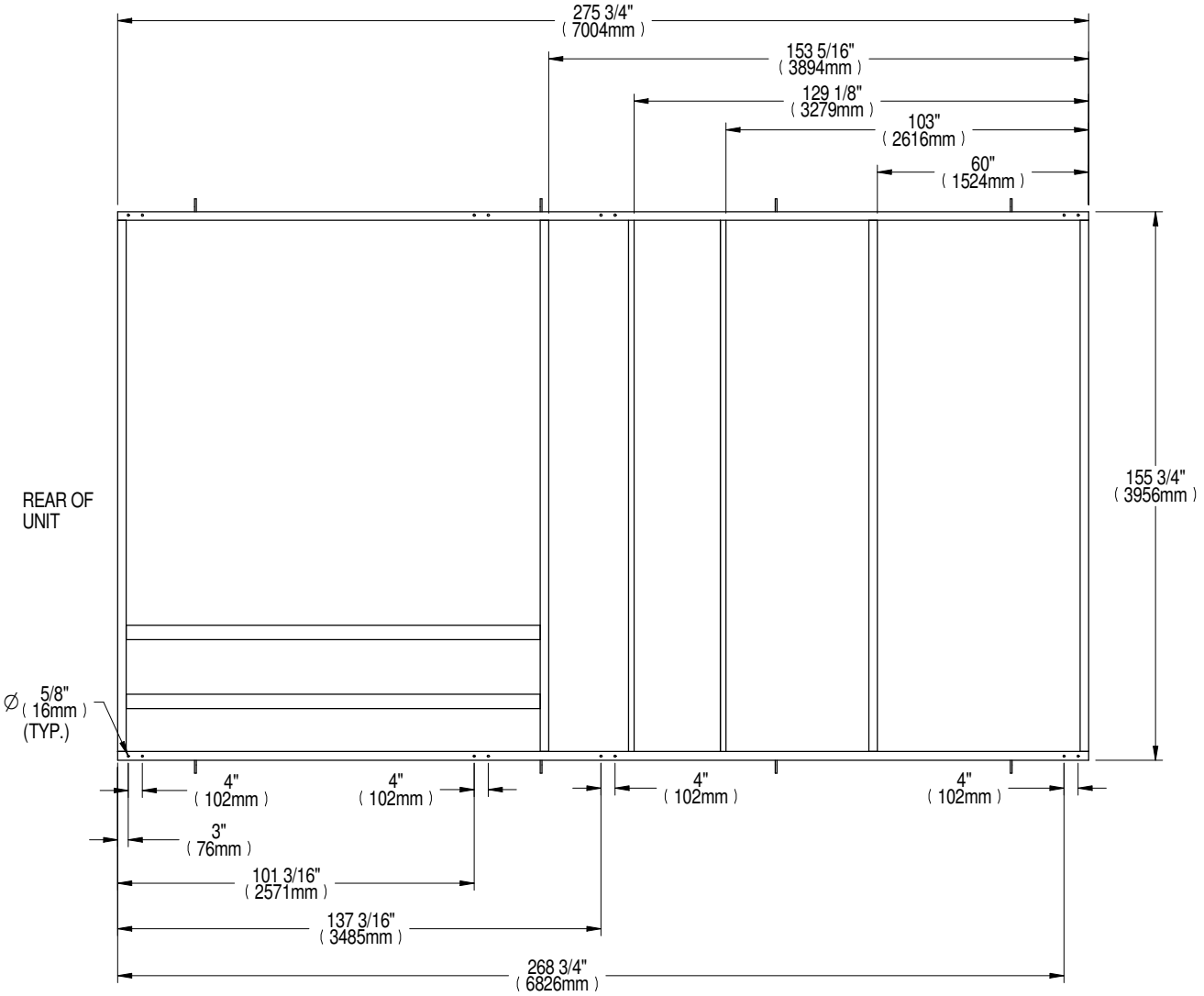

Notes:
1. Underside of unit. Coil and fan removed for clarity.
2. 5/8" diameter holes are provided for anchorage for full wind and seismic performance. Mounting requirement details such as brand, type, embedment depth, concrete strength, wall bracing, and special inspection must be outlined and approved by the project Structural Engineer of Record.
3. Structural floors and housekeeping pads must be designed and approved by the project Structural Engineer of Record to withstand the seismic and wind anchor loads as defined on the installation drawings. The installing contractor is responsible for the proper installation of all anchors and mounting hardware, observing the mounting requirement details outlined by the Engineer of Record.

COOLPHASE FLEX

DRIP PAN CLEANOUT ACCESS & LOCATION

400kW HYBRID PERIMETER UNIT

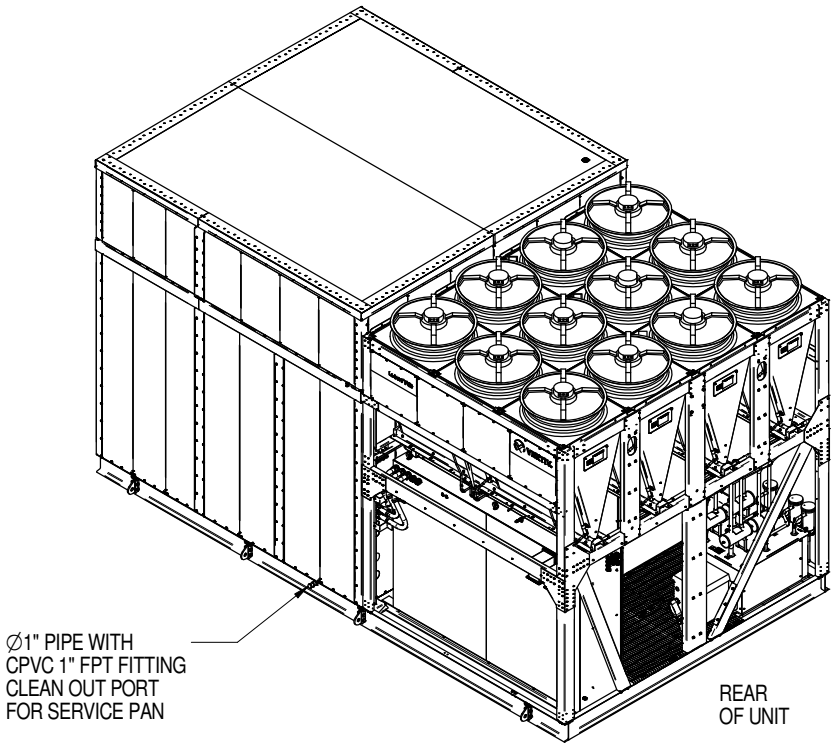

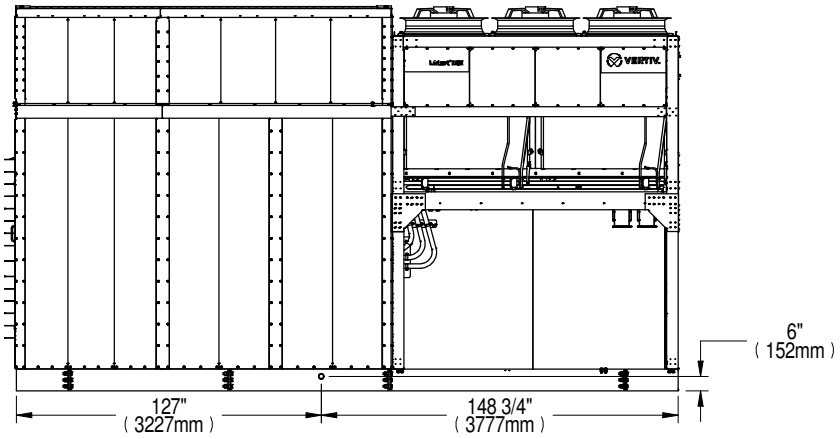

LEFT SIDE OF UNIT
CLEAN-OUT LOCATION

COOLPHASE FLEX

EQUIPMENT FLOOR PLAN
400kW HYBRID PERIMETER UNIT

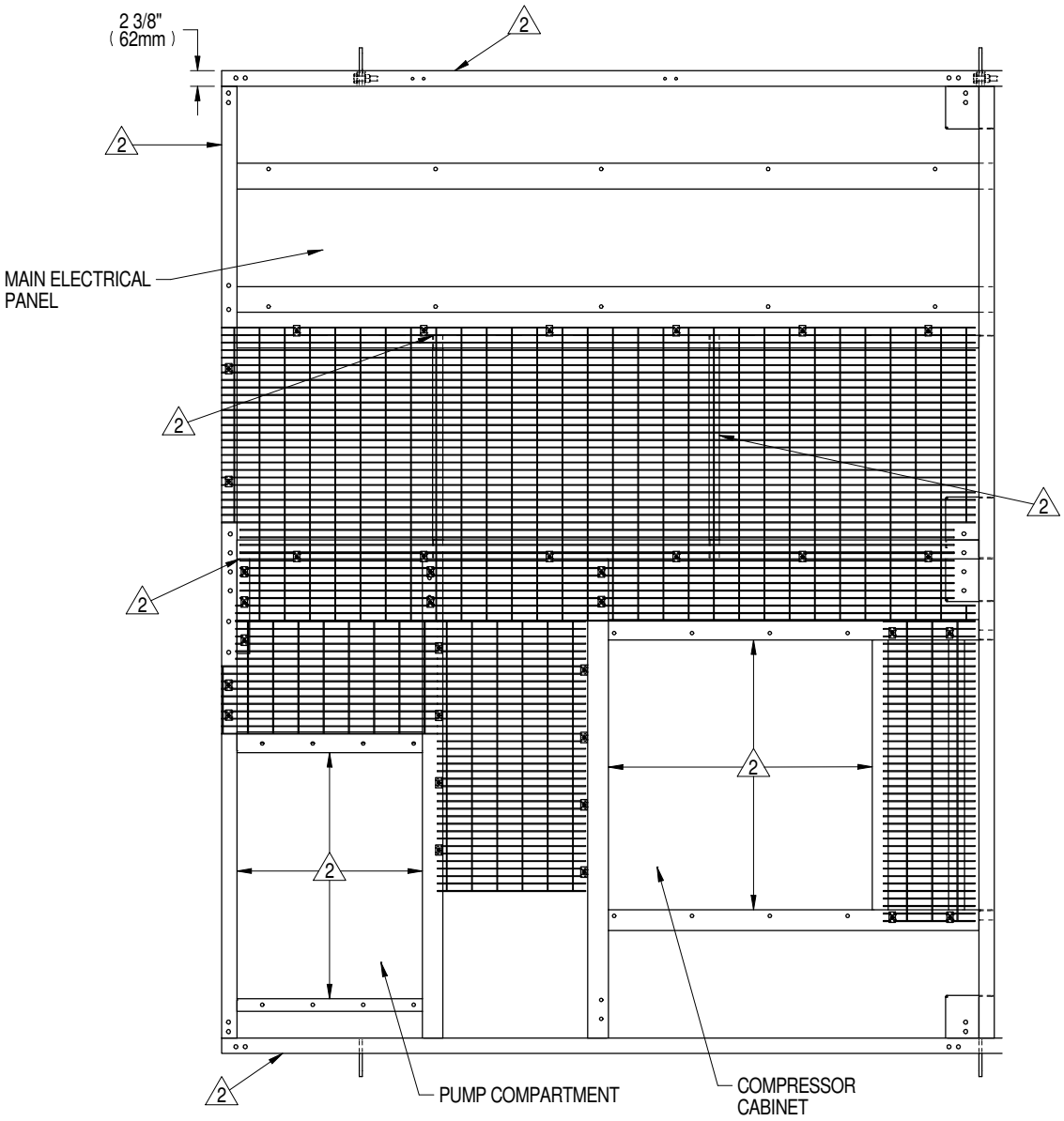

GRATING LEVEL - TOP OF UNIT
(PARTS HIDDEN FOR CLARITY)

Notes:
1. Grating is Removable.

2. Frame Member.
3. For low voltage and communication wiring entry points,
please refer 20000214 for more information.

COOLPHASE FLEX

EQUIPMENT FLOOR PLAN
400kW HYBRID PERIMETER UNIT

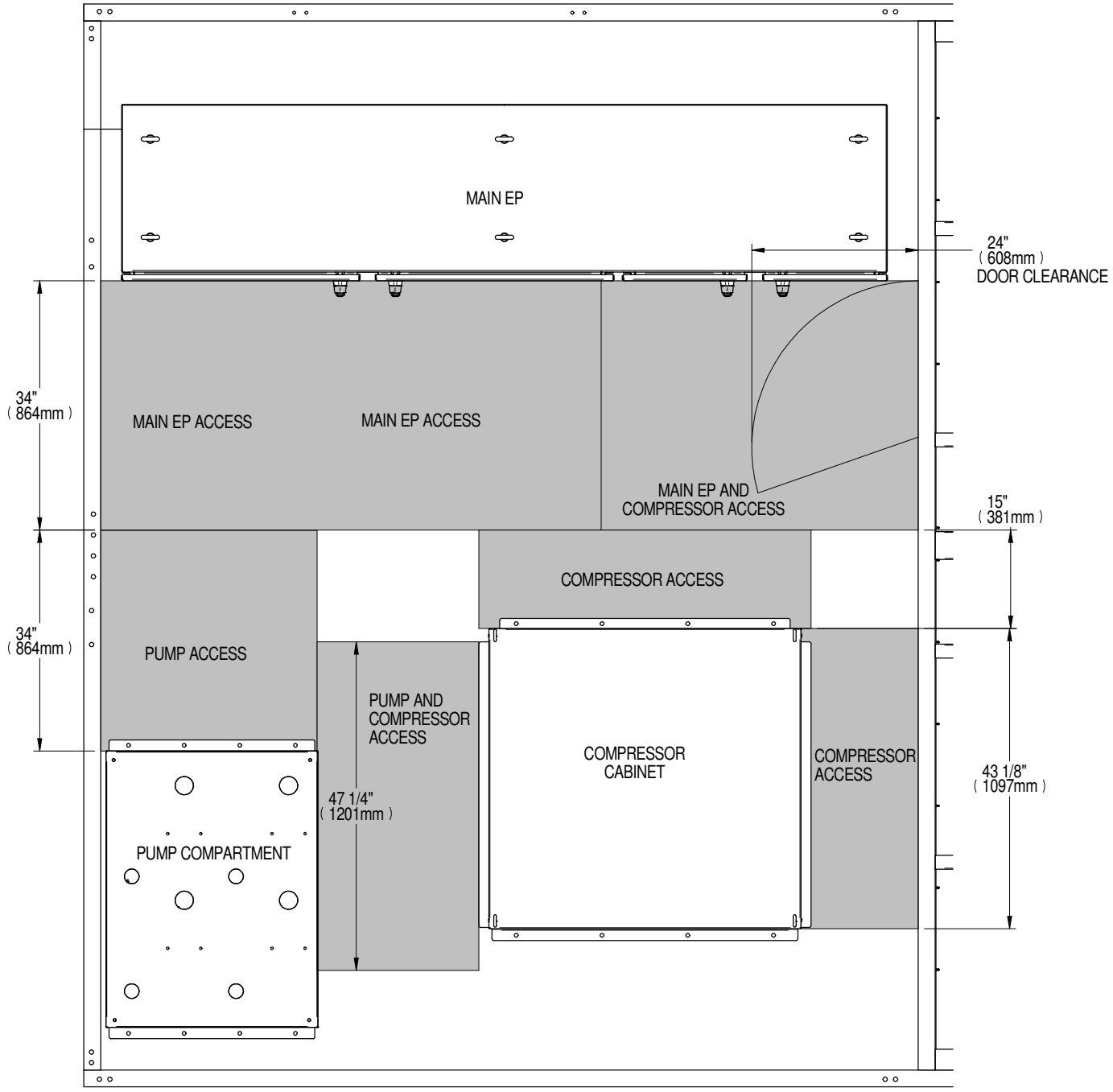

BASE LEVEL
(TOP VIEW)

COOLPHASE FLEX

EQUIPMENT FLOOR PLAN
400kW HYBRID PERIMETER UNIT

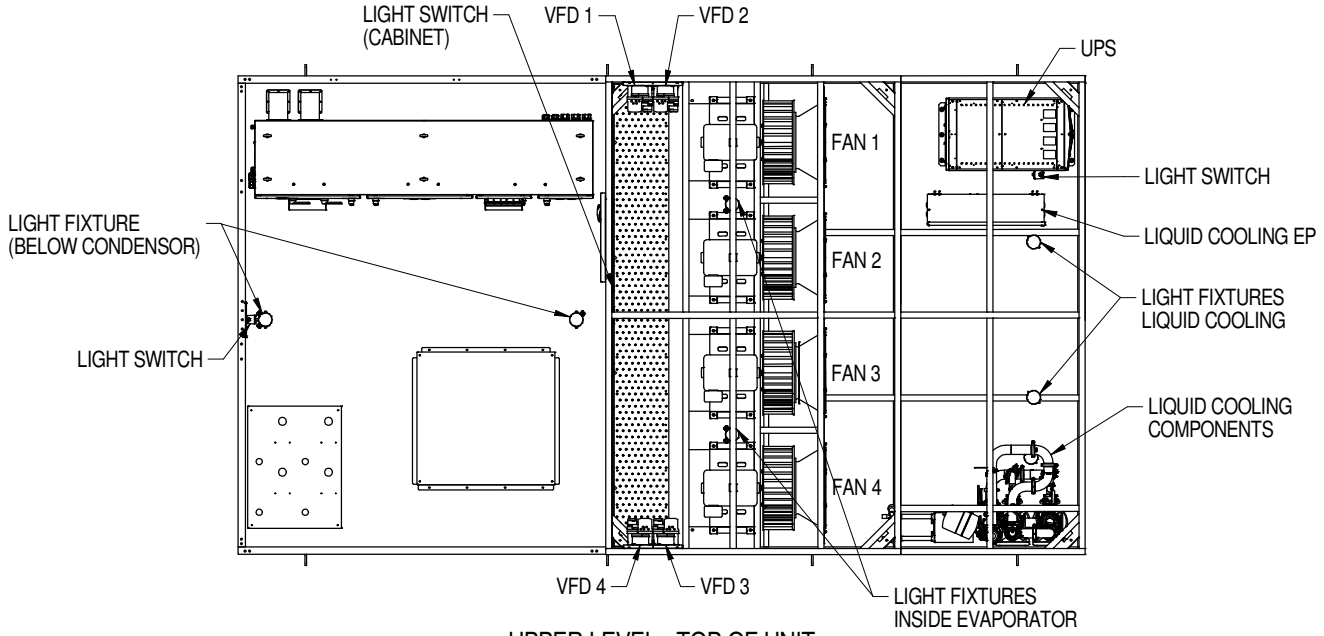

UPPER LEVEL - TOP OF UNIT
(PARTS HIDDEN FOR CLARITY)

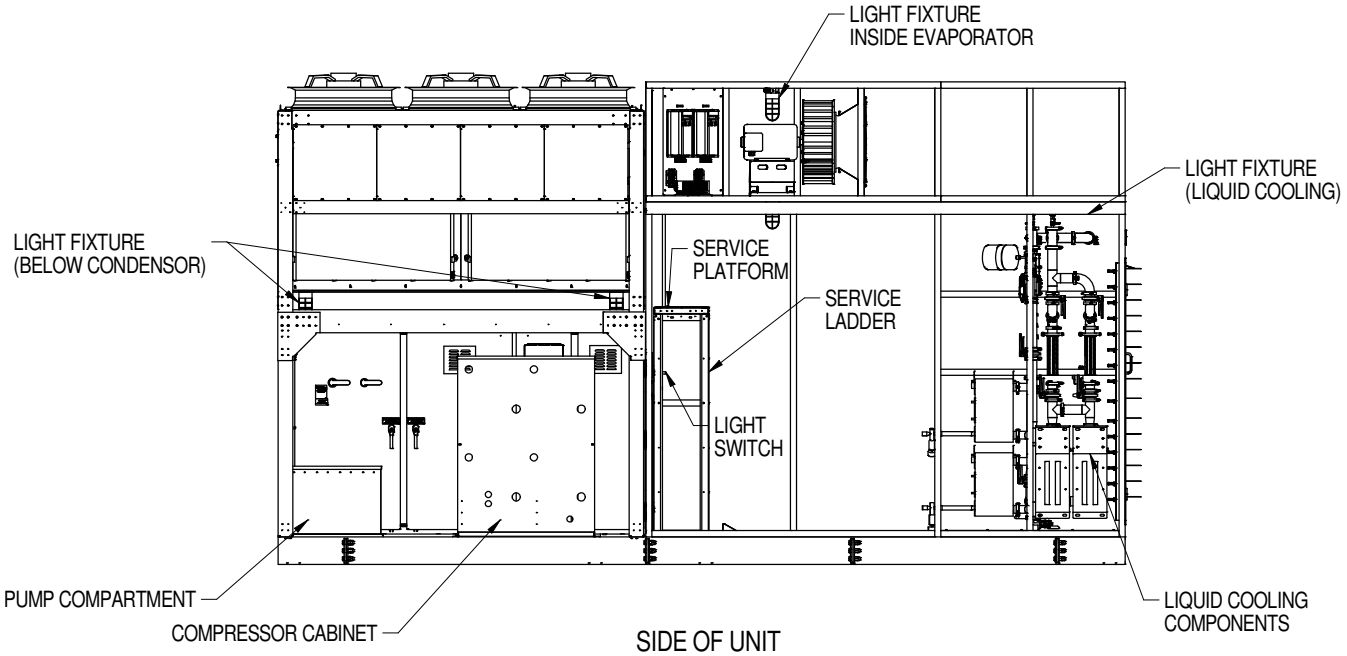

SIDE OF UNIT
(PARTS HIDDEN FOR CLARITY)

COOLPHASE FLEX

PIPING SCHEMATIC
400kW HYBRID PERIMETER UNIT

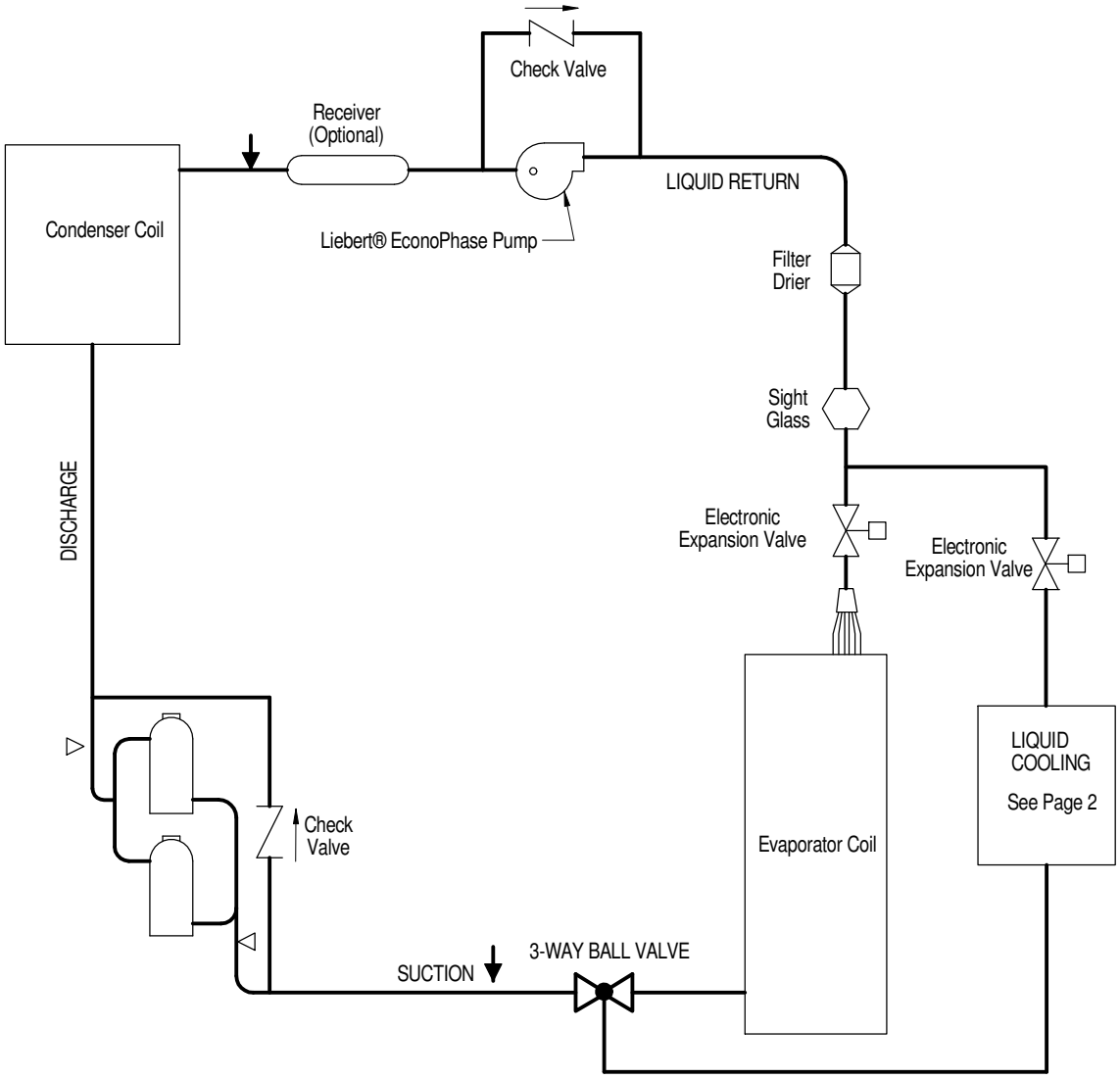

REFRIGERANT PIPING

◁ SERVICE/SCHRADER (ACCESS) CONNECTION, WITH VALVE CORE

↓ SERVICE CONNECTION, 1/2" PACKING VALVE

Notes:
1. Four (4) Refrigeration Circuits provided. Single Refrigeration Circuit shown for clarity.
2. Load bank required at system start-up.
3. Refrigerant charge may need to be adjusted at start-up to optimize system performance. See user manual for additional details.

COOLPHASE FLEX

PIPING SCHEMATIC

400kW HYBRID PERIMETER UNIT

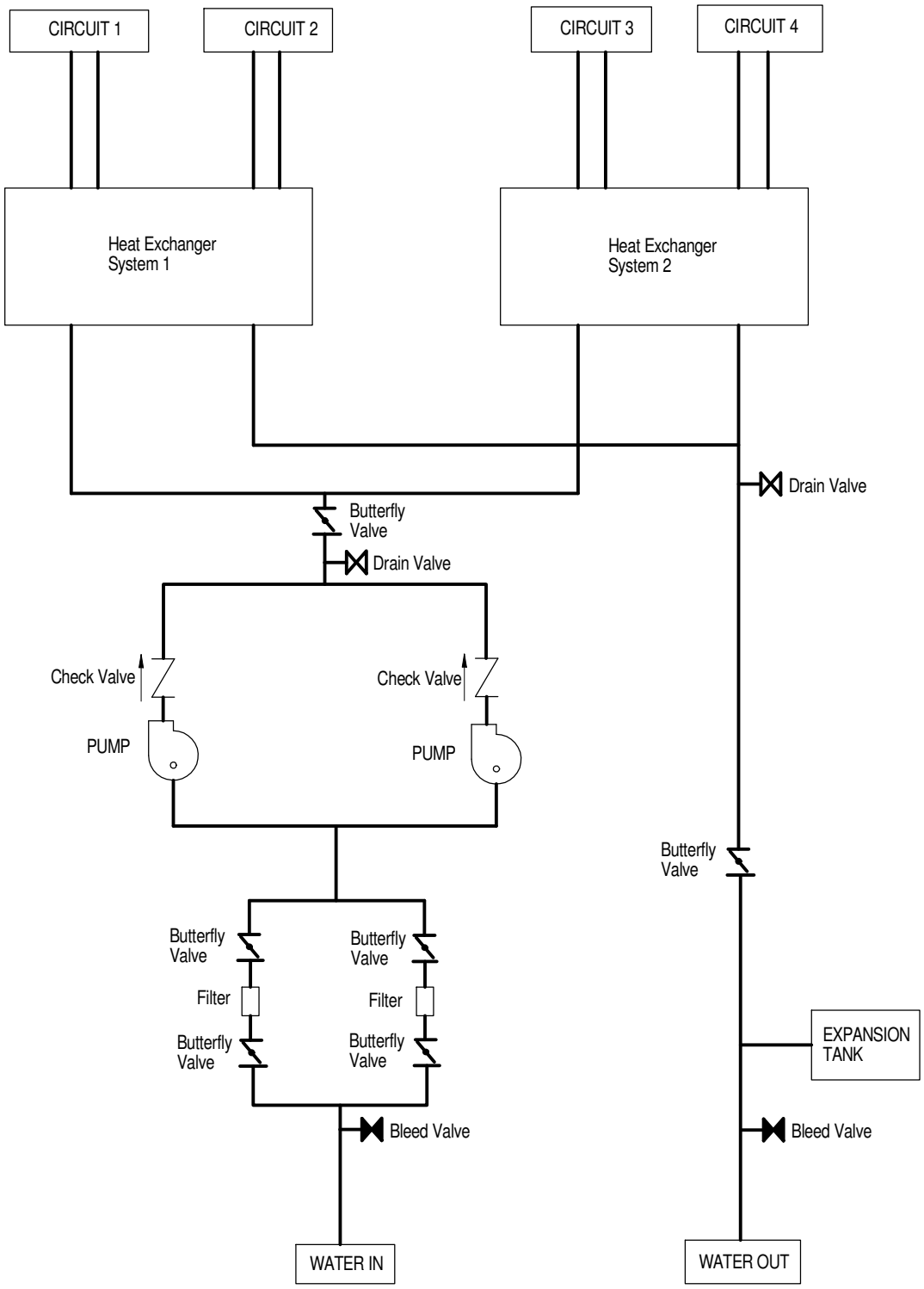

Notes:
1. Wetted materials - the secondary loop materials are S316/S304 Stainless Steel, Chrome Plated Brass for compatibility with all secondary circuit devices and cold plates of all materials.

ELECTRICAL FIELD CONNECTIONS
400kW HYBRID PERIMETER UNIT

STANDARD ELECTRICAL CONNECTIONS

1. **HIGH VOLTAGE ENTRANCES** – This area will be used for the high voltage entrance (120V or more). Enclosure is provided with factory-installed power entry kits to be completed by installer in the field. Power entry kits are not provided with holes or knockouts, which must be done by the installer in the field. The fittings used must have the proper environmental rating per code.

   NOTE: The unit requires a 4-wire connection (3-phase + ground) for each power supply.

ACCEPTABLE CUSTOMER POWER DISTRIBUTION SYSTEMS

i. Wye with solidly grounded neutral.
ii. Wye with high resistance (or impedance) ground.
iii. Delta with corner ground (EMC Filter of VFD's must be removed; see DPN001946).

UNACCEPTABLE CUSTOMER POWER DISTRIBUTION SYSTEMS

iv. Delta without ground or with floating ground.
v. Delta with grounded center tap.

The Vertiv CoolPhase Flex is designed to remain operational and connected to the utility grid during transient voltage and frequency disturbances in compliance with applicable grid operator Voltage Ride-Through (VRT) and Frequency Ride-Through (FRT) requirements for Large Electronic Loads (LELs) operating in computational-load facilities. The unit shall ride through the following conditions without tripping or disconnecting.

The CoolPhase Flex shall meet the following VRT envelope. Voltage is defined as the Root-Mean-Square (RMS) positive-sequence voltage at the Service Delivery Point or Point of Interconnection Bus (POIB), expressed in per-unit (p.u.) of nominal voltage:

Voltage Range (p.u. of Nominal)	Required Response	Minimum Ride-Through Duration
V > 1.20 p.u.	May ride-through or trip	No mandatory ride-through
1.10 < V ≤ 1.20 p.u.	Must remain connected	1.0 seconds
0.90 ≤ V ≤ 1.10 p.u.	Continuous operation	Indefinite — normal operating range
0.80 ≤ V < 0.90 p.u.	Must remain connected	2.0 seconds
0.50 ≤ V < 0.80 p.u.	Must remain connected	0.5 seconds
0.35 ≤ V < 0.50 p.u.	Must remain connected	0.25 seconds
V < 0.35 p.u.	Must remain connected	0.15 seconds

The CoolPhase Flex shall meet the following FRT envelope. All frequency values are measured at the Service Delivery Point or POIB:

Frequency Range	Required Response	Minimum Ride-Through Duration
f > 63.0 Hz	May ride-through or trip	No mandatory ride-through
61.2 < f ≤ 63.0 Hz	Must remain connected	299 seconds (~5 minutes)
58.8 ≤ f ≤ 61.2 Hz	Continuous operation	Indefinite — normal operating range
57.5 ≤ f < 58.8 Hz	Must remain connected	299 seconds (~5 minutes)
f < 57.5 Hz	May ride-through or trip	No mandatory ride-through

2. **LOW VOLTAGE ENTRANCE** – This area will be used for the low voltage and communication fittings. Enclosure is not provided with holes or knockouts, which must be done by the installer in the field. The fittings used must have the proper environmental rating per code.
3. **SOURCE 1 MAIN UNIT POWER CONNECTION** – Terminals are located on top of the locking disconnect switch. Three phase service not provided by Vertiv.
   a. Terminal lugs that accept a single conductor with a wire range of 2AWG-600KCMIL and wire tightening torque of 375 in-lb are factory installed.
   b. Source 1 optional terminal box located in plenum interface factory wired to source 1 on electric panel.

ELECTRICAL FIELD CONNECTIONS
400kW HYBRID PERIMETER UNIT

4. **EARTH GROUND CONNECTION FOR SOURCE 1 MAIN UNIT POWER**
   a. Terminal for field supplied Source 1 earth grounding wire. Earth grounding required for Liebert units. 6AWG-350KCMIL wire range, 375 in-lb wire tightening torque.
   b. Source 1 optional terminal box located in plenum interface factory wired to source 1 ground on electric panel.
5. **SOURCE 2 MAIN UNIT POWER CONNECTION** – Terminals are located on top of the locking disconnect switch. Three phase service not provided by Vertiv.
   a. Terminal lugs that accept a single conductor with a wire range of 2AWG-600KCMIL and wire tightening torque of 375 in-lb are factory installed.
   b. Source 2 optional terminal box located in plenum interface factory wired to source 2 on electric panel.
6. **EARTH GROUND CONNECTION FOR SOURCE 2 MAIN UNIT POWER**
   a. Terminal for field supplied Source 2 earth grounding wire. Earth grounding required for Liebert units. 6AWG-350KCMIL wire range, 375 in-lb wire tightening torque.
   b. Source 2 optional terminal box located in plenum interface factory wired to source 2 ground on electric panel.
7. **FIELD SUPPLIED 120V UTILITY POWER AND SERVICE OUTLET** - Terminals for the connection of a field supplied 120V 20A utility power to feed the lighting, electrical enclosure fans and heaters, and a field supplied 120V 20A utility power to feed the service electrical outlet. 22-8AWG wire range, 14.2lb-in tightening torque. Factory configured requiring one feed (40A Max), or two jumpers can be removed, changing the configuration to two individual supplies (2- 20 Amp circuits).
8. **EARTH GROUNDING CONNECTION FOR FIELD SUPPLIED 120V UTILITY POWER AND SERVICE OUTLET** - Terminal for field supplied 120V earth grounding wire. Earth grounding required for Liebert units. 14-4AWG wire range, 14-10AWG – 20 in-lb, 8AWG – 25 in-lb, 6- 4AWG – 35 in-lb.

LOW VOLTAGE TERMINAL CONNECTIONS

9. **REMOTE SHUTDOWN** – Replace existing jumper between terminals 37 & 38 with field supplied normally closed switch having a minimum 1 AMP, 24VAC rating. Use field supplied Class 1 wiring.
10. **CUSTOMER ALARM INPUT**S – Terminals for field supplied, normally open contacts, having a minimum 1 AMP, 24VAC rating, between terminals 24 and 50, 51, 55, & 56. Use field supplied Class 1 wiring.
11. **COMMON ALARM** – On any alarm, normally open dry contact is closed across terminals 75 & 76 for remote indication. 1 AMP, 24VAC max load. Use field supplied Class 1 wiring.
12. **EXTRA REMOTE UNIT SHUTDOWN** – Two additional contact pairs available for unit shutdown (labeled as 37B & 38B, 37C & 38C). Replace jumpers with field supplied normally closed switch having a minimum 1 AMP, 24VAC rating. Use field supplied Class 1 wiring.
13. **EXTRA COMMON ALARM** – On any alarm, two additional normally open contacts are closed across terminals 94 & 95 and 96 & 97 for remote indication. 1 AMP, 24VAC max load. Use field supplied Class 1 wiring.
14. **MAIN FAN AUXILIARY SWITCH** – On closure of the main fan contactor, normally open dry contact is closed across terminals 84 & 85 for remote indication. 1 AMP, 24VAC max load. Use field supplied Class 1 wiring.
15. **RESERVED**
16. **SURGE PROTECTION ALARM** – When surge protection device needs replacement, normally open dry contact is closed across terminals 11 & 12 for remote indication. 1 AMP, 24VAC max load. Use field supplied Class 1 wiring.

ADDITIONAL INFORMATION

17. **SUPPLY AIR SENSOR (SAS)** – A factory-provided, installed, and commissioned supply air sensor ships with the unit for sensor location in the field by others. The sensor is terminated on the Liebert® iCOM™ unit controller terminal strip and the associated cable wiring is coiled within the unit for shipment located near the supply air connection. It is the responsibility of others to uncoil and locate the sensor in accordance with acceptable best practices and any local codes (50ft provided).
18. **VFD REMOTE KEYPAD** – Allows remote control of evaporator fan VFD's (one keypad for each VFD, located in low voltage Main Controls EP).

NOTE: All low voltage terminal connections are spring-cage with a wire range of 28-12AWG.

ELECTRICAL FIELD CONNECTIONS
400kW HYBRID PERIMETER UNIT

STANDARD COMMUNICATION CONNECTIONS

19. **RS485 BMS CONNECTION** – Terminal TB3-1 is TX/RX+. Terminal TB3-2 is TX/RX-. Use shielded cable with 120ohm characteristic impedance. (Supplied by other).
20. **CANBUS REMOTE SENSOR CONNECTION(P67)** – Remove the inserted plug from this connector and attach the remote sensor cable to power and communicate with Liebert remote Temperature/humidity sensors. Use shielded cable with 120ohm characteristic impedance. (Supplied by other)
    a. **SUPPLY AIR AGGREGATOR SENSOR** – Is a control option that allows the use of the 1 NTC sensor that is already provided as a standard with the unit and the ability to ADD up to an additional 5 - 2T sensors to be used together to measure the supply temperature for a total of up to 6 supply sensors. The ability to use multiple sensors to measure the supply temperature provides iCOM™ the ability to control using the Maximum or Average of all the supply sensors. This is especially useful in application of ducted systems and non-raised floor application because of the ability to have additional sensors strategically placed to measure supply temperature and they provide benefits in raised floor applications.
    b. **2T SENSOR** – Is a control option that allows temperature data from multiple sensors to be averaged together when used in Teamwork 1 Mode. In this mode, one unit is selected as the “master”. When cascade control is enabled, selected unit or units will operate continuously, standby unit will cycle on when additional cooling is required. If Lead/Lag control is enabled, Standby unit will automatically start upon detection of a Lead unit. The Lead unit will automatically rotate every 24 hours (Adj) to ensure equal run time between all units if auto rotate is enabled.
21. **ETHERNET BMS CONNECTION (ETHERNET SWITCH)** – RJ-45 connection for connecting to BMS Ethernet network. Use Class 5 shielded cable (Supplied by other).
22. **ETHERNET UNIT TO UNIT CONNECTION (ETHERNET SWITCH)** – RJ-45 connection for connecting to other units. Use Class 5 shielded cable (Supplied by other).

NOTE: All low voltage terminal connections are spring-cage with a wire range of 28-12AWG.
NOTE: All communication cables should be kept separate from high-voltage wiring.

OPTIONAL ELECTRICAL CONNECTIONS

(Contact factory for availability)

23. **RESERVED**
24. **RESERVED**
25. **HEAT TRACE** – Terminals for field supplied connection of heat trace used to heat the condensate water line. Power is supplied from the 120V Utility Power (item 7).

NOTE: Terminal connections (item 27) are spring-cage with a wire range of 28-12AWG.

ELECTRICAL FIELD CONNECTIONS

400kW HYBRID PERIMETER UNIT

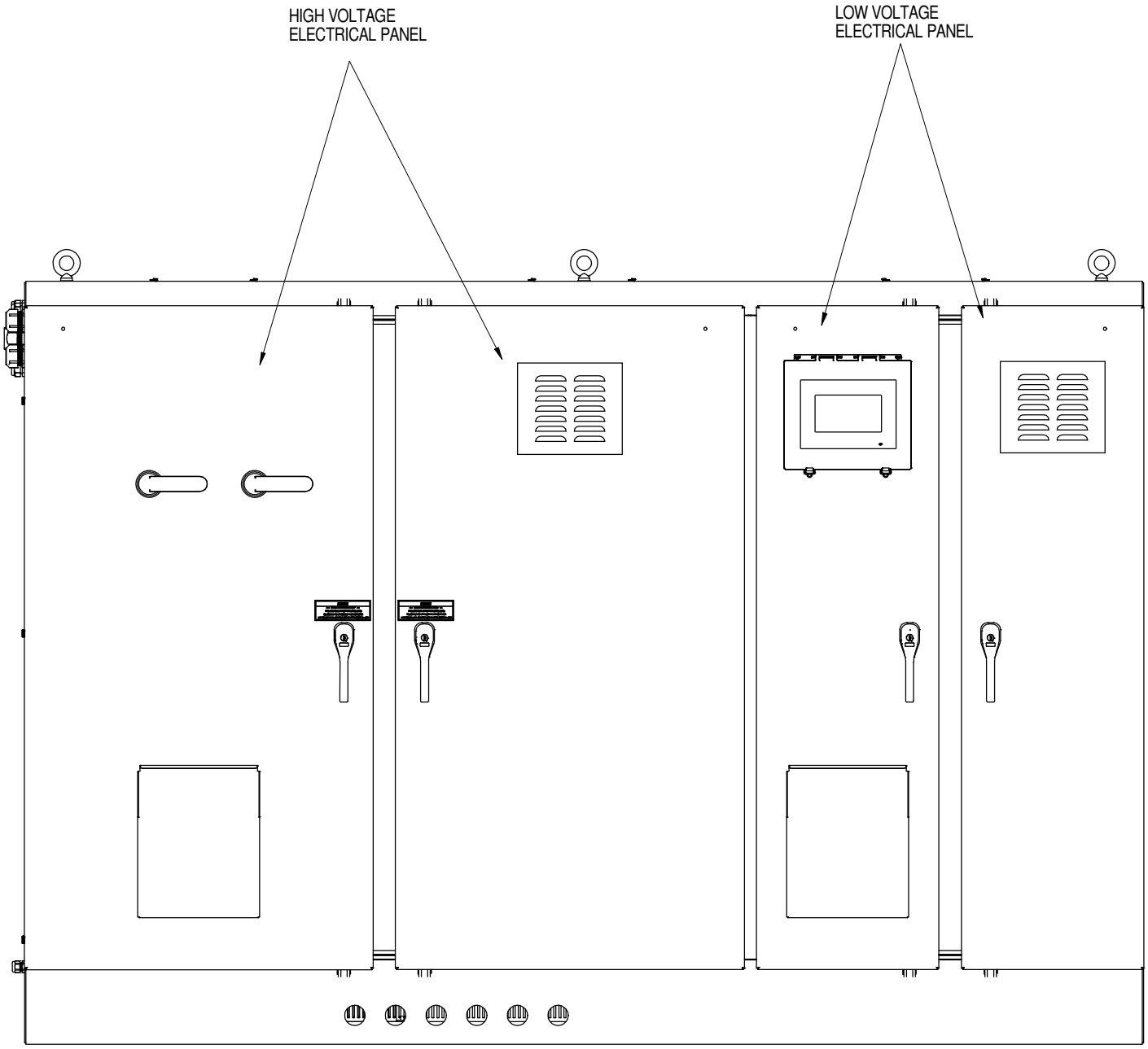

FRONT OF ELECTRICAL PANEL

ELECTRICAL FIELD CONNECTIONS

400kW HYBRID PERIMETER UNIT

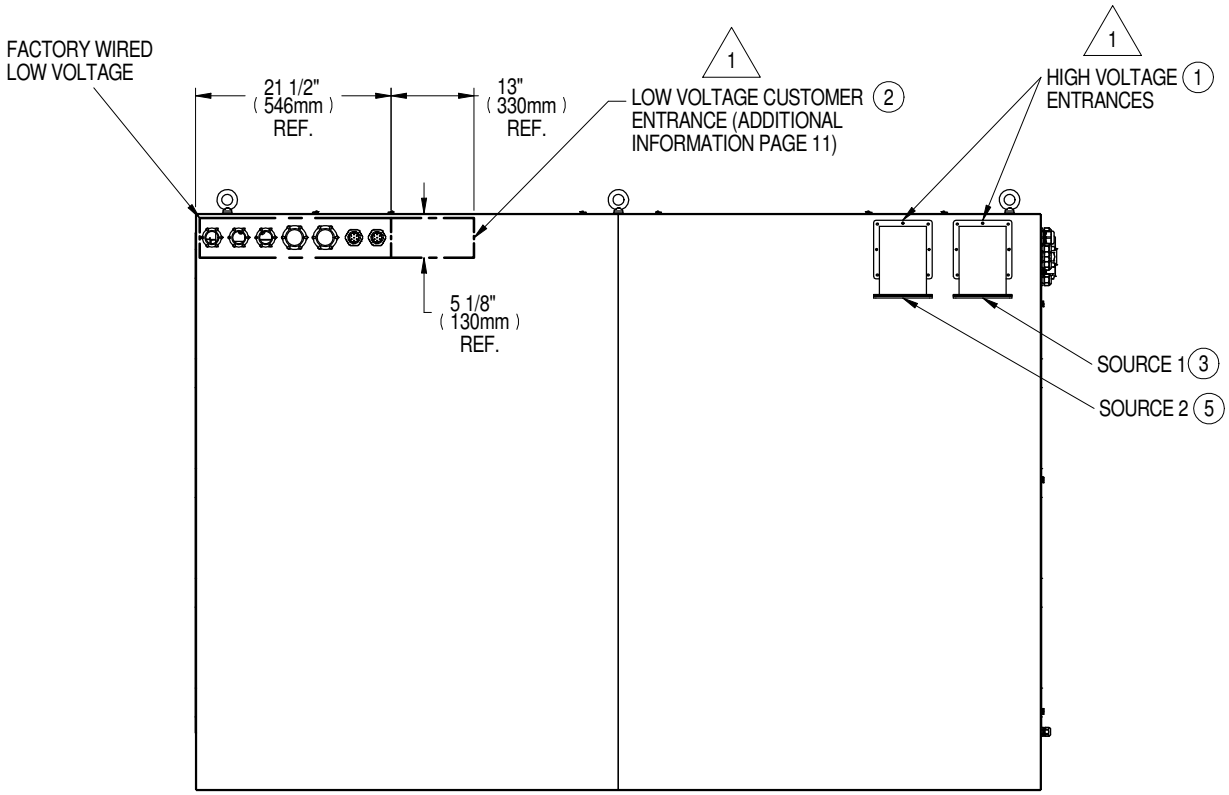

REAR OF ELECTRICAL PANEL

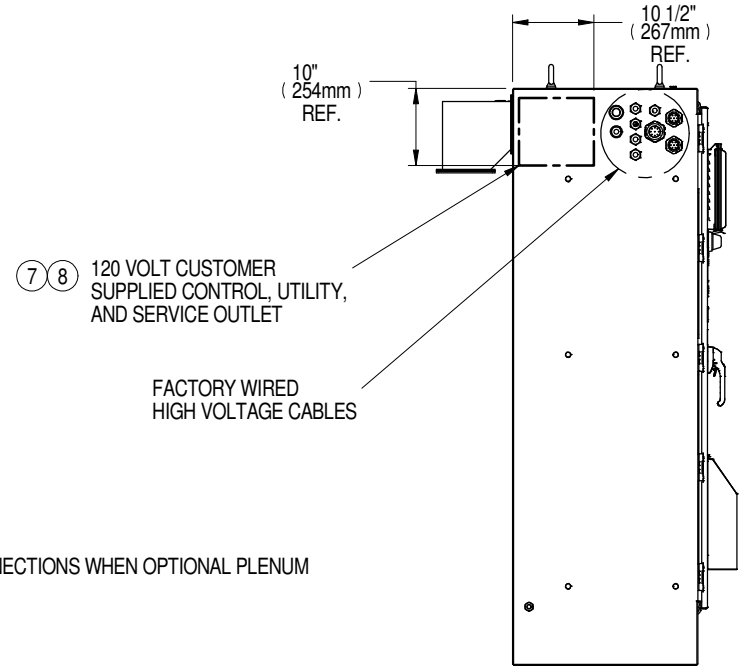

NOTES:

1. THIS ENTRANCE IS USED FOR CUSTOMER CONNECTIONS WHEN OPTIONAL PLENUM CONNECTIONS ARE NOT INSTALLED AND USED.

2. CONDUIT OPTION NOT SHOWN.

3. FOR CONDUIT OPTION AND PLENUM CONNECTIONS FOR HIGH AND LOW VOLTAGE SEE PAGES 13-14.

LEFT SIDE OF ELECTRICAL PANEL

ELECTRICAL FIELD CONNECTIONS
400kW HYBRID PERIMETER UNIT

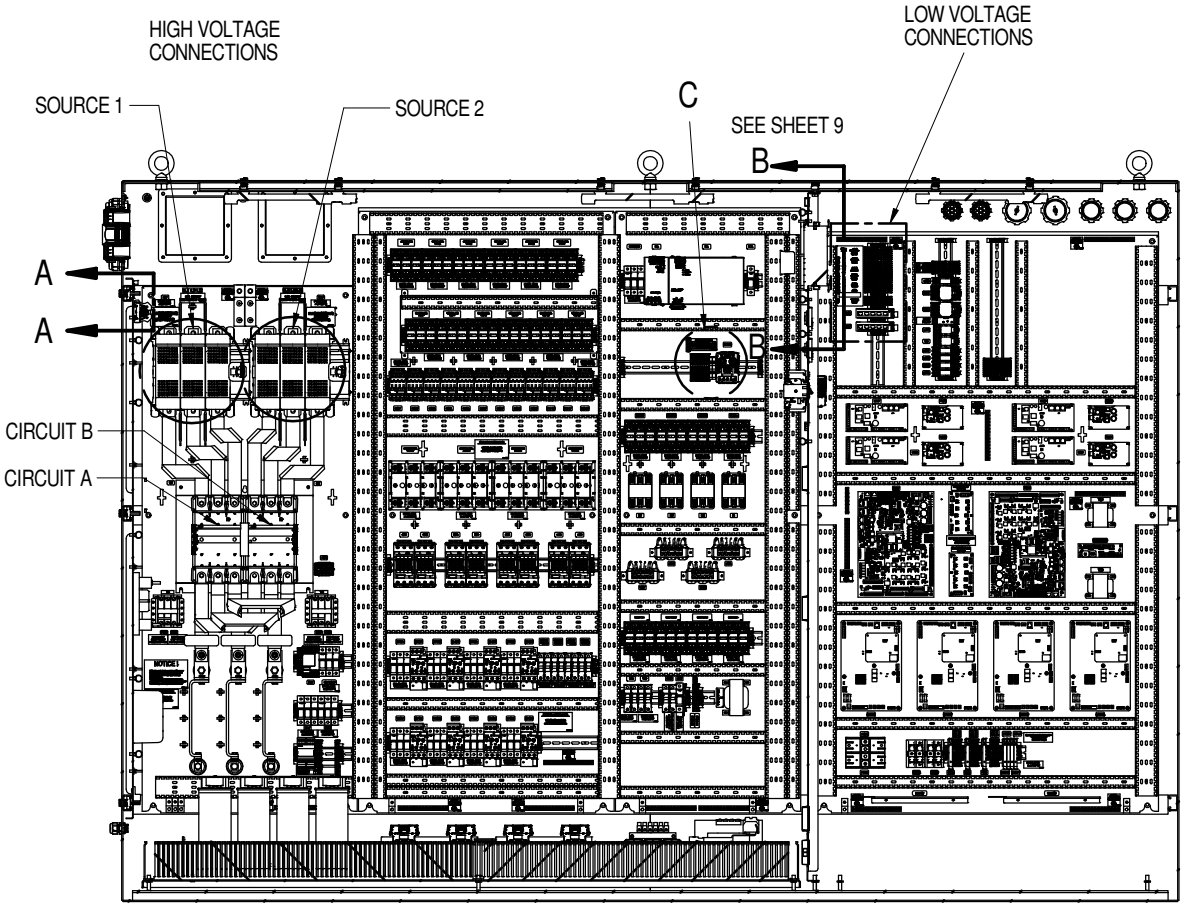

FRONT OF ELECTRICAL PANEL

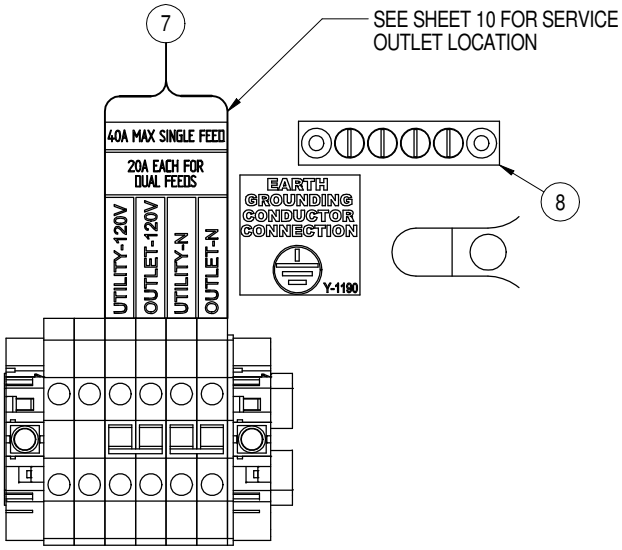

SECTION A-A

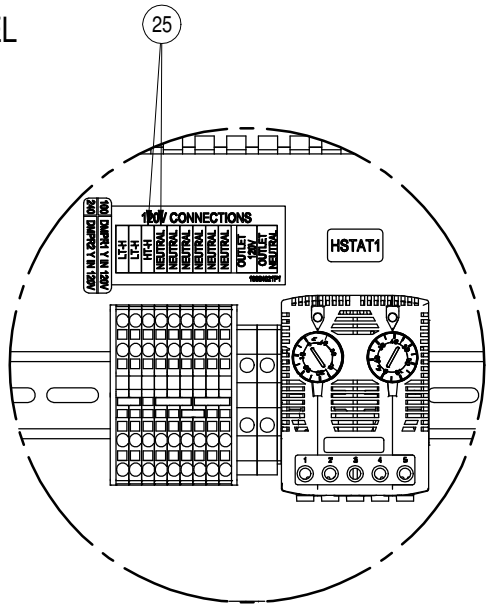

DETAIL C

ELECTRICAL FIELD CONNECTIONS

400kW HYBRID PERIMETER UNIT

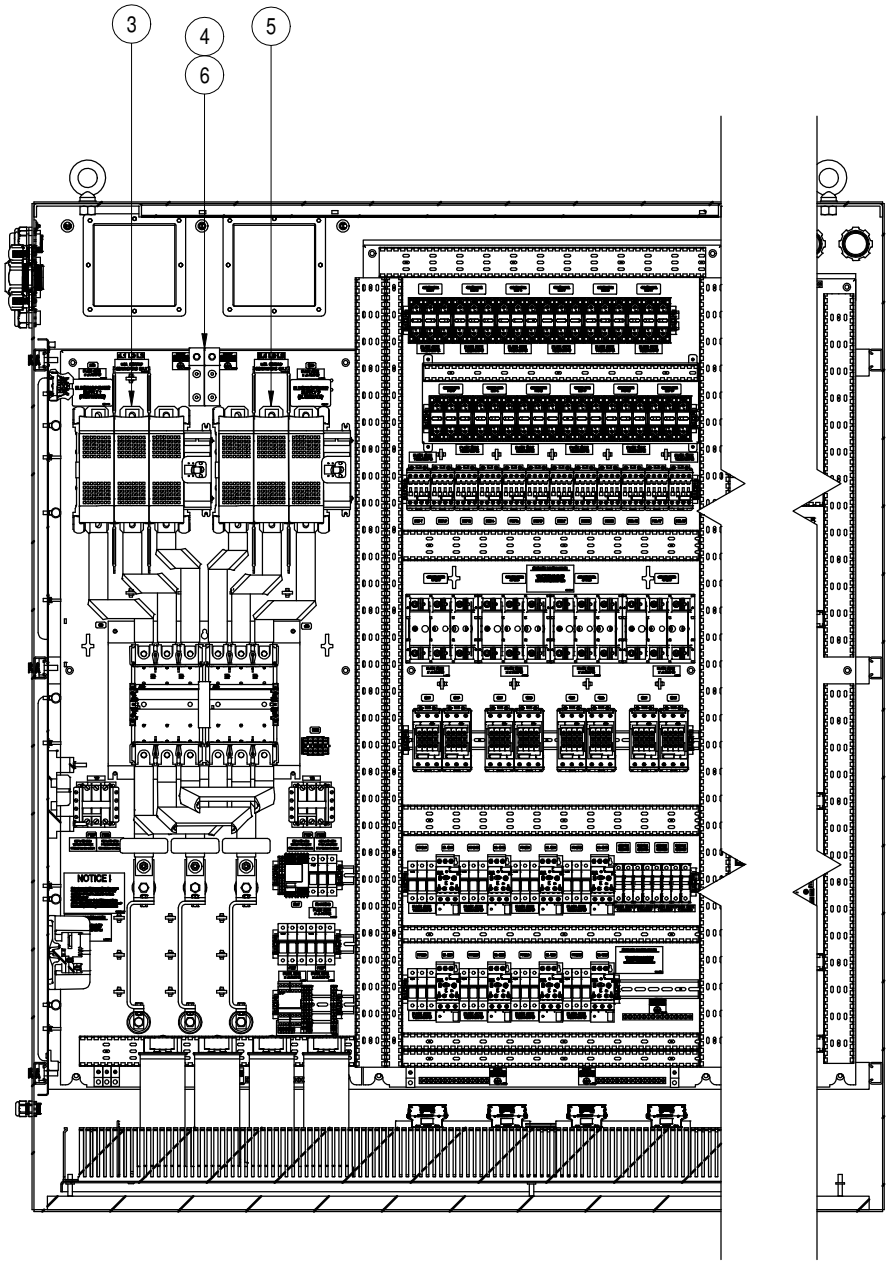

FRONT OF ELECTRICAL PANEL
HIGH VOLTAGE

ELECTRICAL FIELD CONNECTIONS

400kW HYBRID PERIMETER UNIT

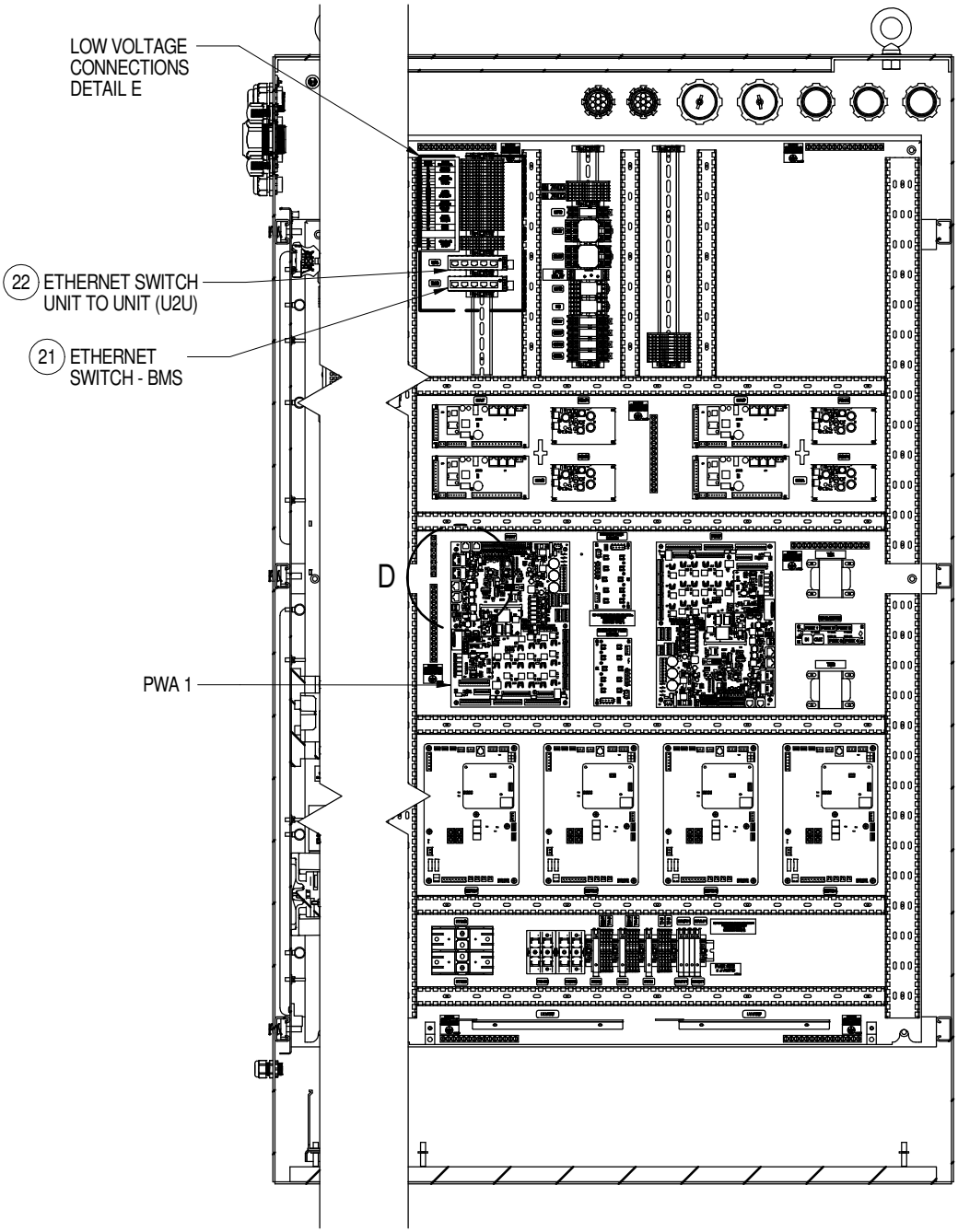

FRONT OF ELECTRICAL PANEL
LOW VOLTAGE

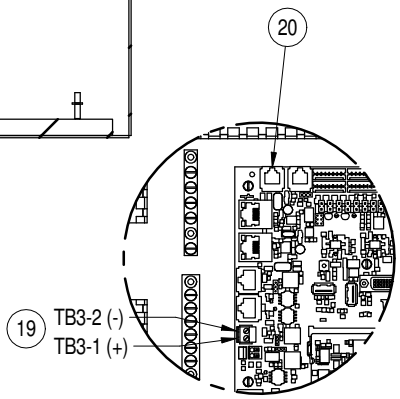

DETAIL D

ELECTRICAL FIELD CONNECTIONS
400kW HYBRID PERIMETER UNIT

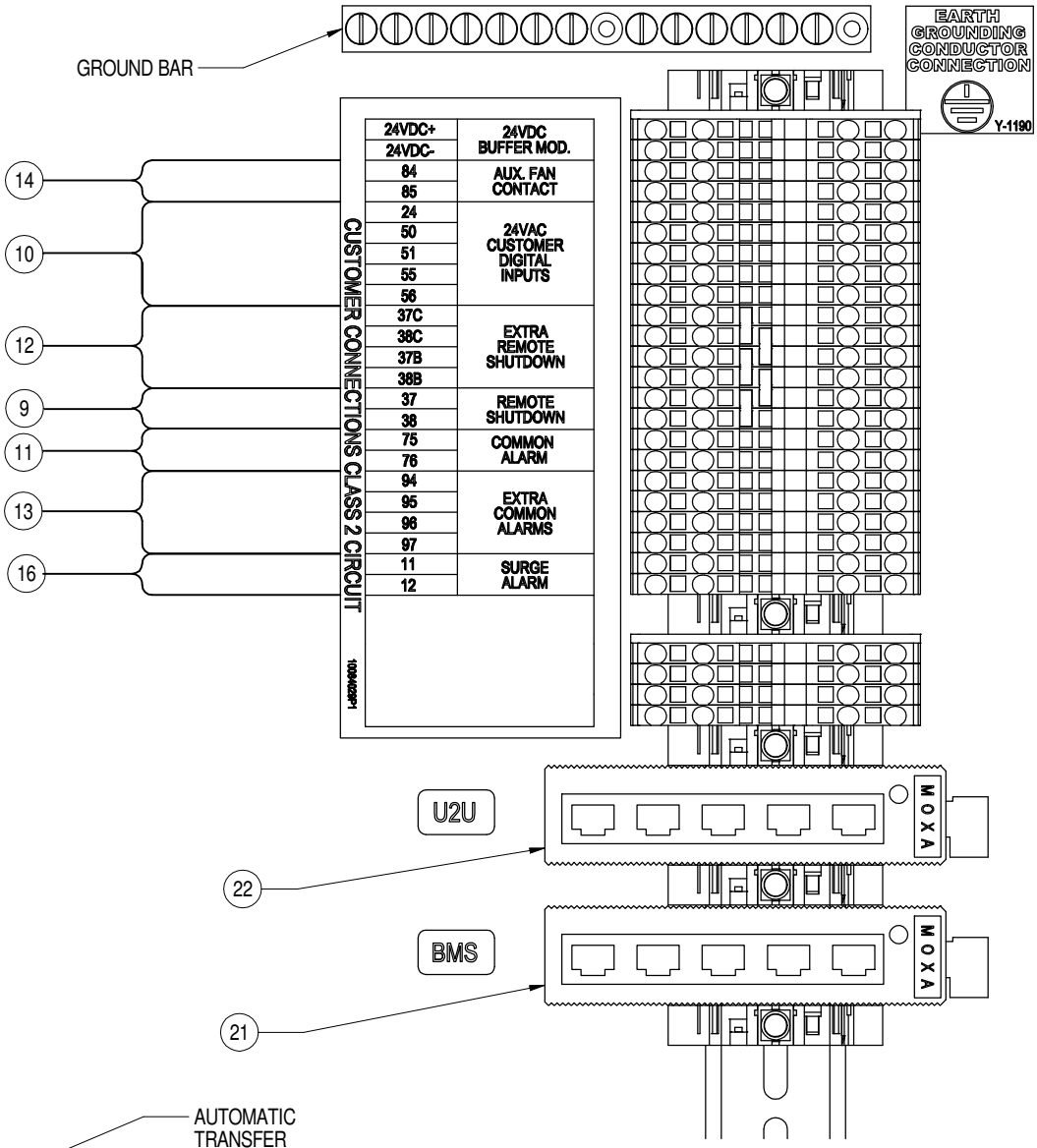

DETAIL E
LOW VOLTAGE CUSTOMER CONNECTIONS

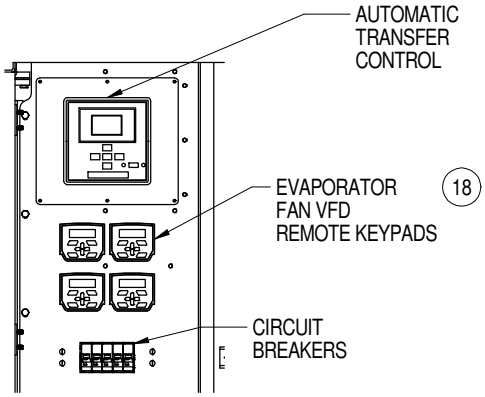

SECTION B-B

ELECTRICAL FIELD CONNECTIONS
400kW HYBRID PERIMETER UNIT

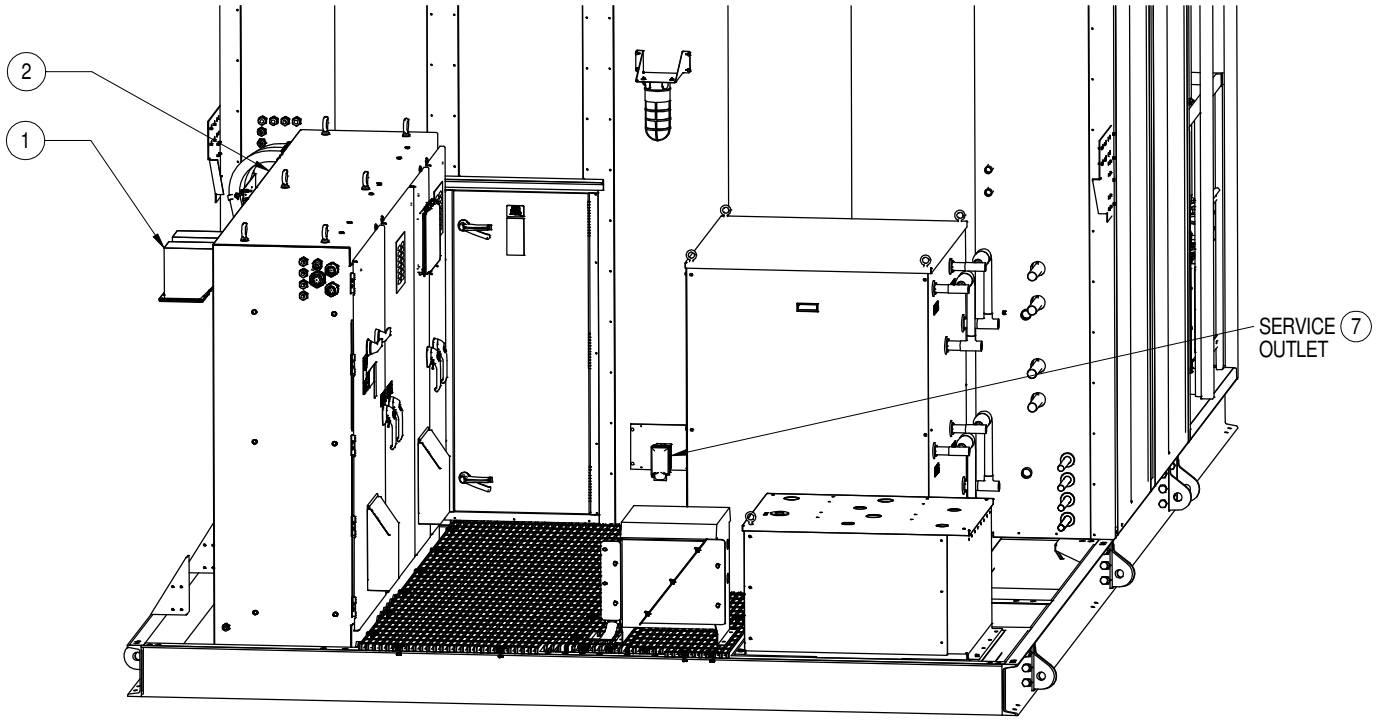

REAR OF THE UNIT (PARTS NOT SHOWN FOR CLARITY)
CONVENIENCE OUTLET LOCATION

NOTES:

1. CONDUIT OPTION NOT SHOWN.

ELECTRICAL FIELD CONNECTIONS
400kW HYBRID PERIMETER UNIT

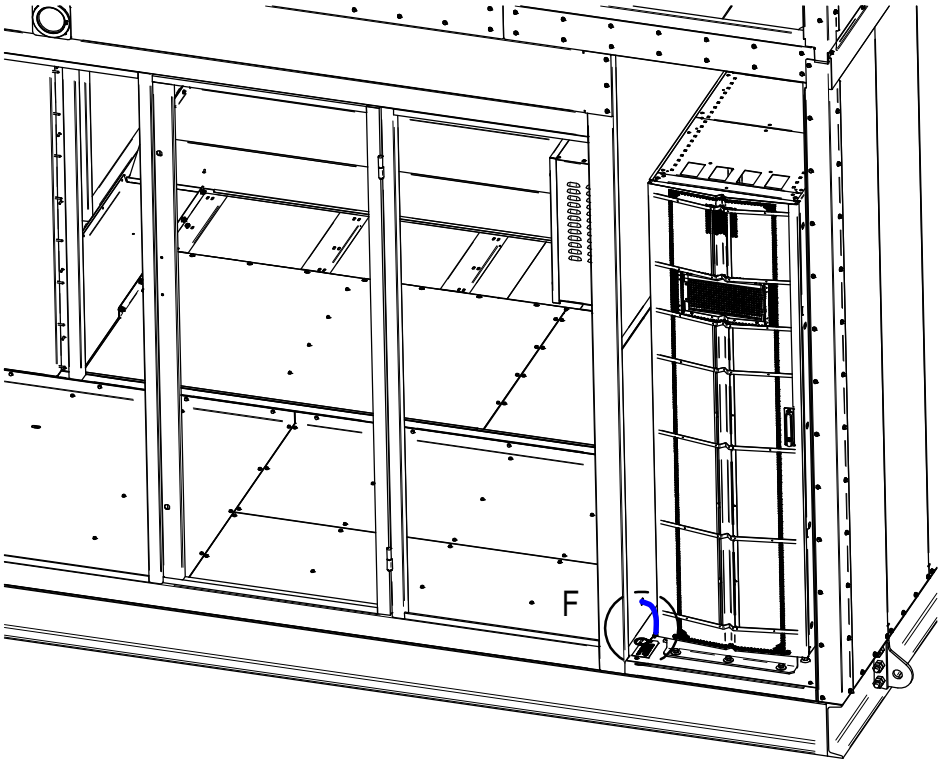

FRONT OF THE UNIT (PARTS NOT SHOWN FOR CLARITY)

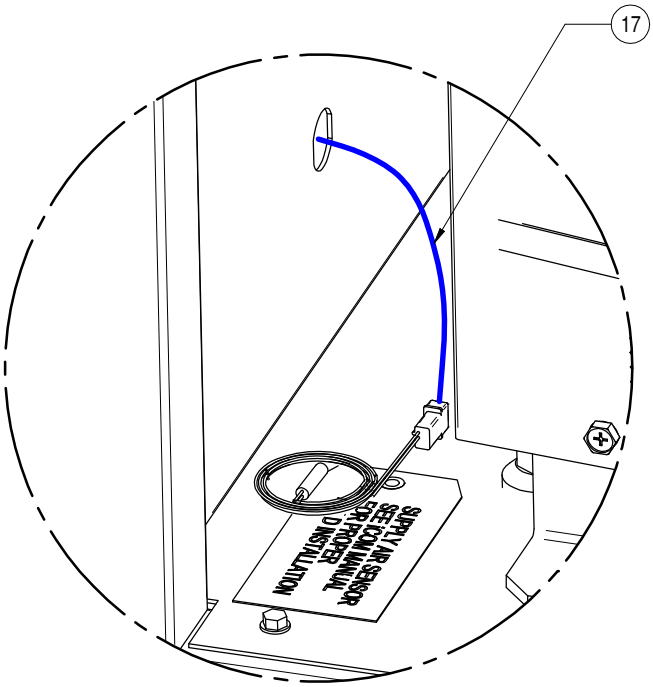

DETAIL F

ELECTRICAL FIELD CONNECTIONS

400kW HYBRID PERIMETER UNIT HIGH VOLTAGE ENTRANCE

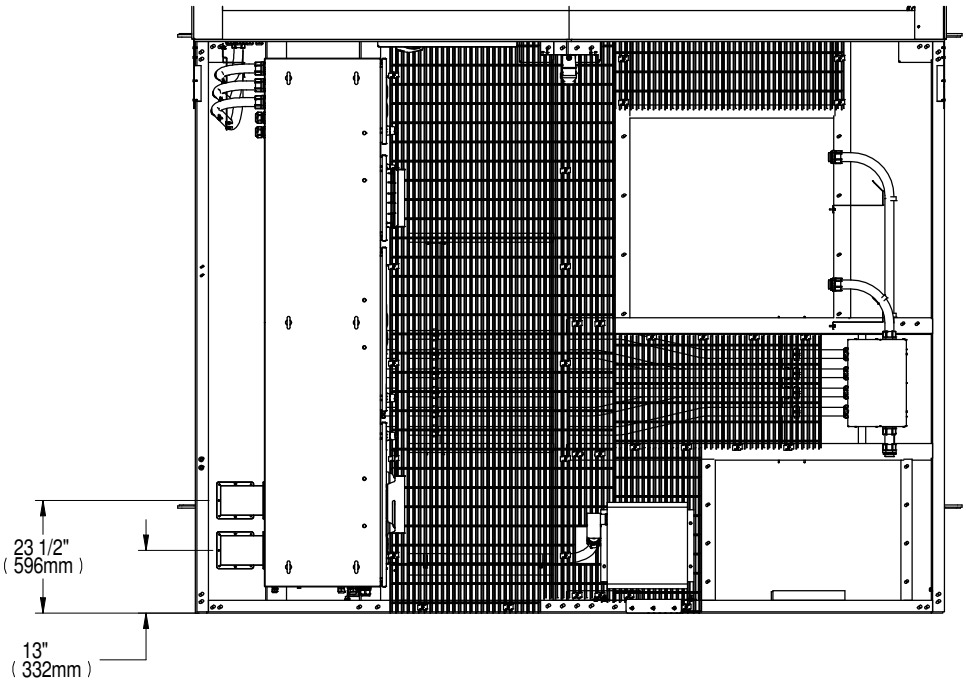

TOP OF UNIT (PARTS NOT SHOWN FOR CLARITY)

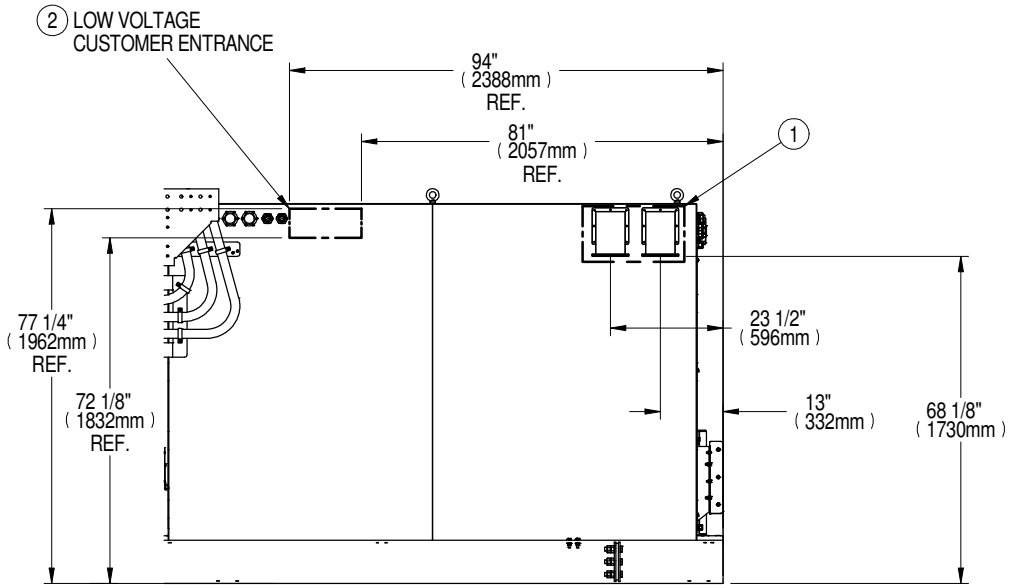

SIDE OF UNIT (PARTS NOT SHOWN FOR CLARITY)

NOTES:

1. CONDUIT OPTION NOT SHOWN.

ELECTRICAL FIELD CONNECTIONS

OPTIONAL DUAL POWER INPUT WITH TWO HV CONDUITS AND THREE LV CONDUITS FOR CUSTOMER CONNECTIONS

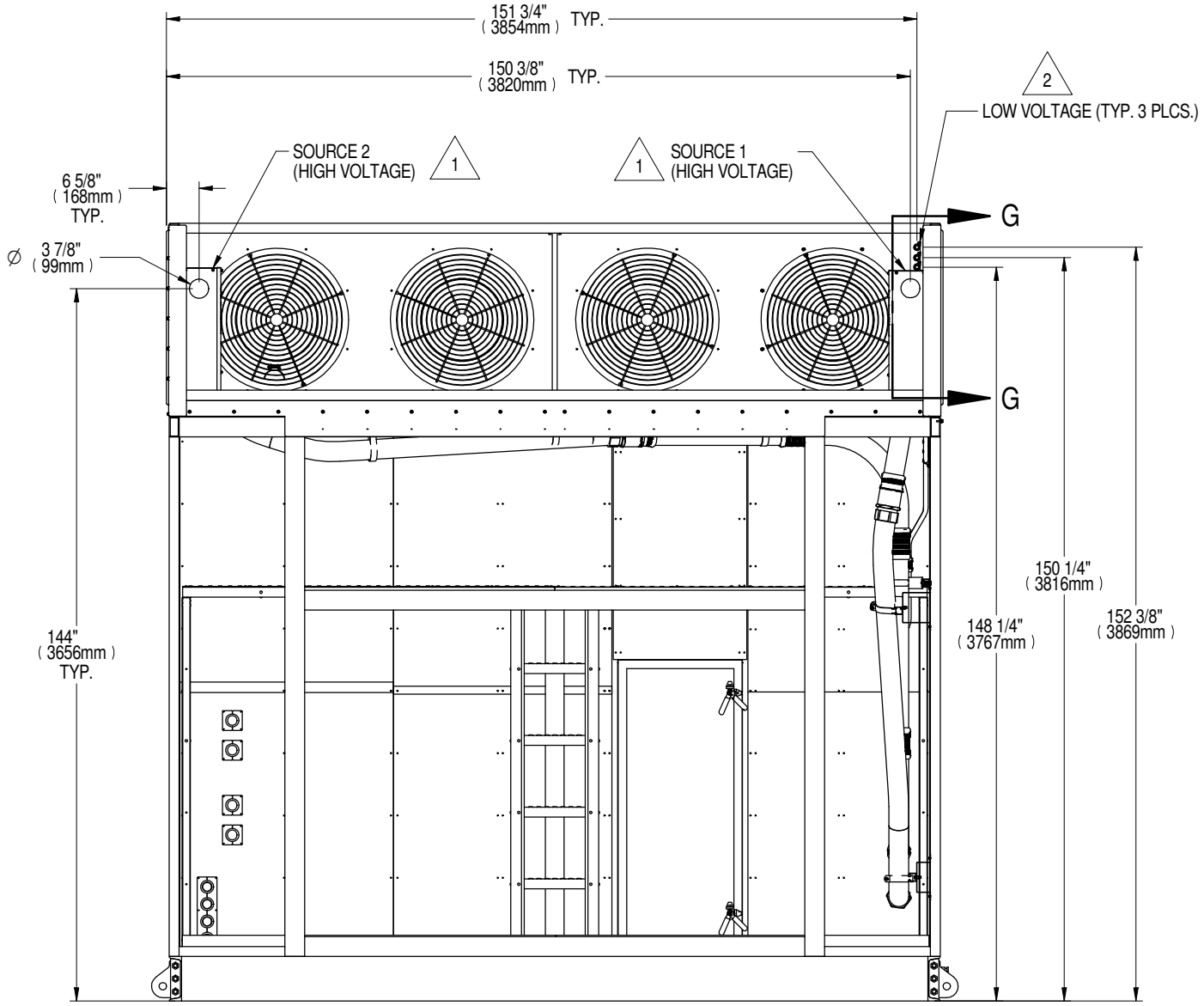

FRONT OF UNIT (PARTS NOT SHOWN FOR CLARITY)

NOTES:

1. KNOCKOUT IS PROVIDED FOR 3.5" (89MM) NOM. CONDUIT FOR THE CUSTOMER CONNECTIONS. SEE PAGE 14 FOR DETAIL F.

2. LOW VOLTAGE CONDUIT IS PROVIDED WITH FACTORY INSTALLED PULL-STRINGS.

ELECTRICAL FIELD CONNECTIONS

OPTIONAL DUAL POWER INPUT WITH TWO HV CONDUITS AND THREE LV CONDUITS FOR CUSTOMER CONNECTIONS - PLENUM BOX DETAIL

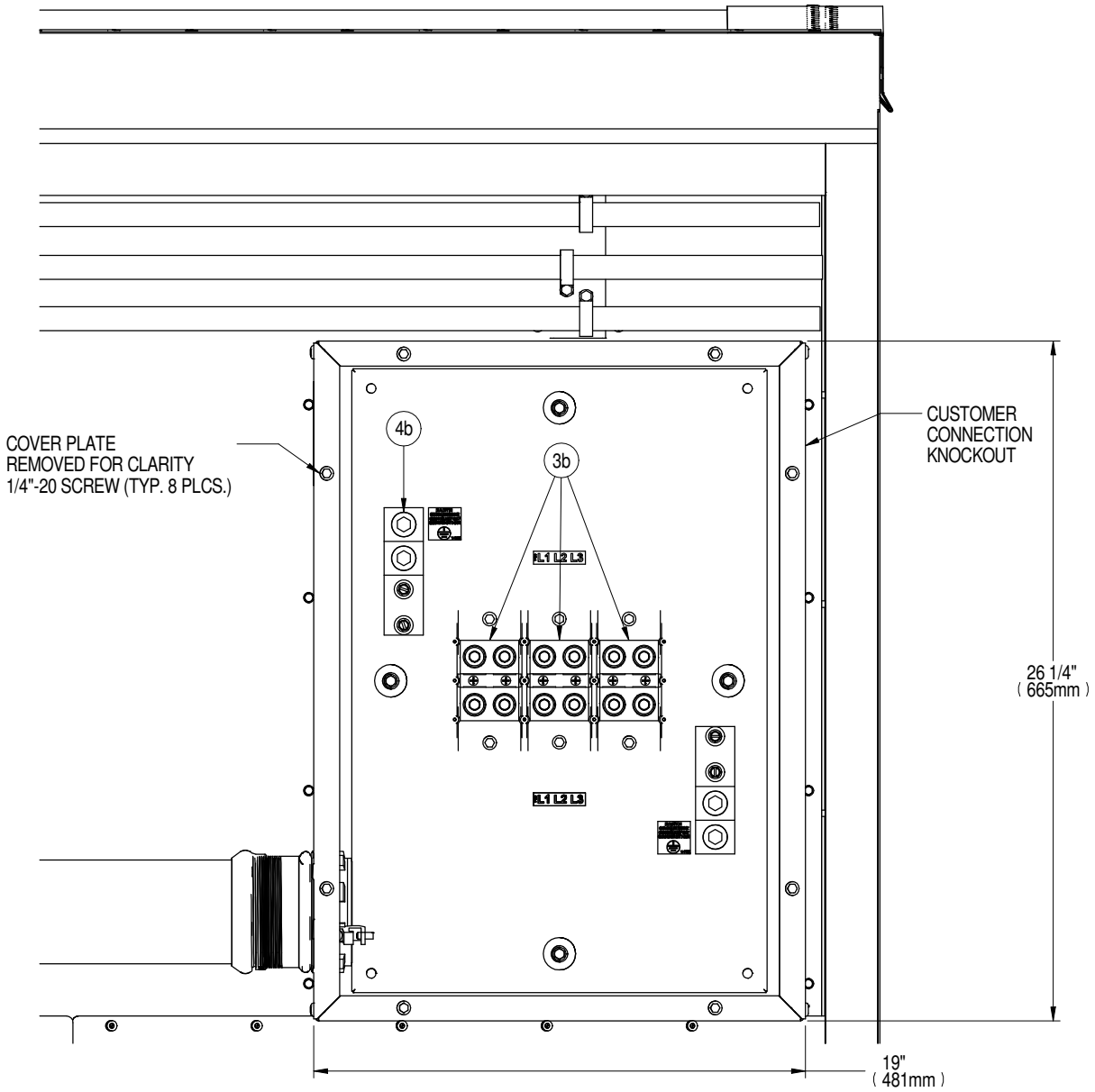

SECTION G-G
SOURCE 1 PLENUM BOX

ELECTRICAL FIELD CONNECTIONS
DP400/500

STANDARD ELECTRICAL CONNECTIONS

1. **HIGH VOLTAGE ENTRANCES**- This area will be used for the high voltage entrance (120V or more). Enclosure is provided with factory installed power entry kits to be completed by installer in the field. Power entry kits are not provided with holes or knockouts, which must be done by the installer in the field. The fittings used must have the proper environmental rating per code.

   NOTE: The unit requires a 4-wire connection (3-phase + ground) for each power supply.

   ACCEPTABLE CUSTOMER POWER DISTRIBUTION SYSTEMS
   i. Wye with solidly grounded neutral.
   ii. Wye with high resistance (or impedance) ground.
   iii. Delta with corner ground (EMC Filter of VFD's must be removed; see DPN001946).

   UNACCEPTABLE CUSTOMER POWER DISTRIBUTION SYSTEMS
   iv. Delta without ground or with floating ground.
   v. Delta with grounded center tap.

2. **LOW VOLTAGE ENTRANCE** - This area will be used for the low voltage and communication fittings. Enclosure is not provided with holes or knockouts, which must be done by the installer in the field. The fittings used must have the proper environmental rating per code.
3. **SOURCE 1 MAIN UNIT POWER CONNECTION** - Terminals are located on top of the locking disconnect switch. Three phase service not provided by Vertiv.
   a. Terminal lugs that accept a single conductor with a wire range of 2AWG-600KCMIL and wire tightening torque of 375 in-lb are factory installed.
4. **EARTH GROUND CONNECTION FOR SOURCE 1 MAIN UNIT POWER** - Terminal for field supplied Source 1 earth grounding wire. Earth grounding required for Liebert units. 6AWG-350KCMIL wire range, 375 in-lb wire tightening torque.
5. **SOURCE 2 MAIN UNIT POWER CONNECTION** – Terminals are located on top of the locking disconnect switch. Three phase service not provided by Vertiv.
   a. Terminal lugs that accept a single conductor with a wire range of 2AWG-600KCMIL and wire tightening torque of 375 in-lb are factory installed.
   b. For single power input units, source 2 is used as single connection.
6. **EARTH GROUND CONNECTION FOR SOURCE 2 MAIN UNIT POWER** - Terminal for field supplied Source 2 earth grounding wire. Earth grounding required for Liebert units. 6AWG-350KCMIL wire range, 375 in-lb wire tightening torque.
7. **FIELD SUPPLIED 120V UTILITY POWER AND SERVICE OUTLET** - Terminals for the connection of a field supplied 120V 20A utility power to feed the lighting, electrical enclosure fans and heaters, and a field supplied 120V 20A utility power to feed the service electrical outlet. 22-8AWG wire range, 14.2lb-in tightening torque. Factory configured requiring one feed (40A Max), or two jumpers can be removed, changing the configuration to two individual supplies (2- 20 Amp circuits).
8. **EARTH GROUNDING CONNECTION FOR FIELD SUPPLIED 120V UTILITY POWER AND SERVICE OUTLET** - Terminal for field supplied 120V earth grounding wire. Earth grounding required for Liebert units. 14-4AWG wire range, 14-10AWG – 20 in-lb, 8AWG – 25 in-lb, 6- 4AWG – 35 in-lb.

ELECTRICAL FIELD CONNECTIONS
DP400/500

LOW VOLTAGE TERMINAL CONNECTIONS

9. **REMOTE SHUTDOWN** - Replace existing jumper between terminals 37 & 38 with field supplied normally closed switch having a minimum 1 AMP, 24VAC rating. Use field supplied Class 1 wiring.
10. **CUSTOMER ALARM INPUT**S - Terminals for field supplied, normally open contacts, having a minimum 1 AMP, 24VAC rating, between terminals 24 and 50, 51, 55, & 56. Use field supplied Class 1 wiring.
11. **COMMON ALARM** - On any alarm, normally open dry contact is closed across terminals 75 & 76 for remote indication. 1 AMP, 24VAC max load. Use field supplied Class 1 wiring.
12. **EXTRA REMOTE UNIT SHUTDOWN** - Two additional contact pairs available for unit shutdown (labeled as 37B & 38B, 37C & 38C). Replace jumpers with field supplied normally closed switch having a minimum 1 AMP, 24VAC rating. Use field supplied Class 1 wiring.
13. **EXTRA COMMON ALARM** - On any alarm, two additional normally open contacts are closed across terminals 94 & 95 and 96 & 97 for remote indication. 1 AMP, 24VAC max load. Use field supplied Class 1 wiring.
14. **MAIN FAN AUXILIARY SWITCH** - On closure of the main fan contactor, normally open dry contact is closed across terminals 84 & 85 for remote indication. 1 AMP, 24VAC max load. Use field supplied Class 1 wiring.
15. **REMOTE ANALOG INPUTS** - Terminals for field supplied normally open contacts, having a minimum of 1 AMP, 24VAC rating, between terminals 41, 42, 43, & 44. Use field supplied Class 1 wiring.
    a. **REMOTE SENSOR FAN CONTROL** - Allows fan speed control to be driven by a remote sensor capable of transmitting a 4- 20Ma, 0-5V, or 0-10V signal. Applications for this control method include, but are not limited to, underfloor static pressure.
16. **SURGE PROTECTION ALARM** - When surge protection device needs replacement, normally open dry contact is closed across terminals 11 & 12 for remote indication. 1 AMP, 24VAC max load. Use field supplied Class 1 wiring.

ADDITIONAL INFORMATION

17. **SUPPLY AIR SENSOR (SAS)** - A factory-provided, installed, and commissioned supply air sensor ships with the unit for sensor location in the field by others. The sensor is terminated on the Liebert iCOM™ unit controller terminal strip and the associated cable wiring is coiled within the unit for shipment located near the supply air connection. It is the responsibility of others to uncoil and locate the sensor in accordance with acceptable best practices and any local codes (50ft provided).
18. **VFD REMOTE KEYPAD** - Allows remote control of evaporator fan VFD's (one keypad for each VFD, located in low voltage Main Controls EP).

NOTE: All low voltage terminal connections are spring-cage with a wire range of 28-12AWG.

ELECTRICAL FIELD CONNECTIONS
DP400/500

STANDARD COMMUNICATION CONNECTIONS

19. **RS485 BMS CONNECTION** - Terminal TB3-1 is TX/RX+. Terminal TB3-2 is TX/RX-. Use shielded cable with 120ohm characteristic impedance. (Supplied by other).
20. **CANBUS REMOTE SENSOR CONNECTION(P67)** - Remove the inserted plug from this connector and attach the remote sensor cable to power and communicate with Liebert remote Temperature/humidity sensors. Use shielded cable with 120ohm characteristic impedance. (Supplied by other)
    a. **SUPPLY AIR AGGREGATOR SENSOR** - Is a control option that allows the use of the 1 NTC sensor that is already provided as a standard with the unit and the ability to ADD up to an additional 5 - 2T sensors to be used together to measure the supply temperature for a total of up to 6 supply sensors. The ability to use multiple sensors to measure the supply temperature provides iCOM™ the ability to control using the Maximum or Average of all the supply sensors. This is especially useful in application of ducted systems and non-raised floor application because of the ability to have additional sensors strategically placed to measure supply temperature and they provide benefits in raised floor applications.
    b. **2T SENSOR** - Is a control option that allows temperature data from multiple sensors to be averaged together when used in Teamwork 1 Mode. In this mode, one unit is selected as the “master”. When cascade control is enabled, selected unit or units will operate continuously, standby unit will cycle on when additional cooling is required. If Lead/Lag control is enabled, Standby unit will automatically start upon detection of a Lead unit. The Lead unit will automatically rotate every 24 hours (Adj) to ensure equal run time between all units if auto rotate is enabled.
21. **ETHERNET BMS CONNECTION(P74)** - RJ-45 connection for connecting to BMS Ethernet network. Use Class 5 shielded cable (Supplied by other).
22. **ETHERNET UNIT TO UNIT CONNECTION (ETHERNET SWITCH)**- RJ-45 connection for connecting to other units. Use Class 5 shielded cable (Supplied by other).

NOTE: All low voltage terminal connections are spring-cage with a wire range of 28-12AWG.
NOTE: All communication cables should be kept separate from high-voltage wiring.

OPTIONAL ELECTRICAL CONNECTIONS

(Contact factory for availability)

23. **FIELD SUPPLIED 120V CONTROL POWER -** Terminals for the connection of a field supplied 120V 20A control power to feed the equipment controls. 22-8AWG wire range, 14.2lb-in tightening torque.
24. **EARTH GROUNDING CONNECTION FOR FIELD SUPPLIED 120V CONTROL POWER** - Terminal for field supplied 120V earth grounding wire. Earth grounding required for Liebert units. 14-4AWG wire range, 14-10AWG – 20 in-lb, 8AWG – 25 in-lb, 6-4AWG – 35 in-lb.
25. **HEAT TRACE** - Terminals for field supplied connection of heat trace used to heat the condensate water line. Power is supplied from the 120V Utility Power (item 7).

NOTE: Terminal connections (item 25) are spring-cage with a wire range of 28-12AWG.

LIEBERT® DSE PACKAGED SOLUTION

ELECTRICAL FIELD CONNECTIONS

DP400/500

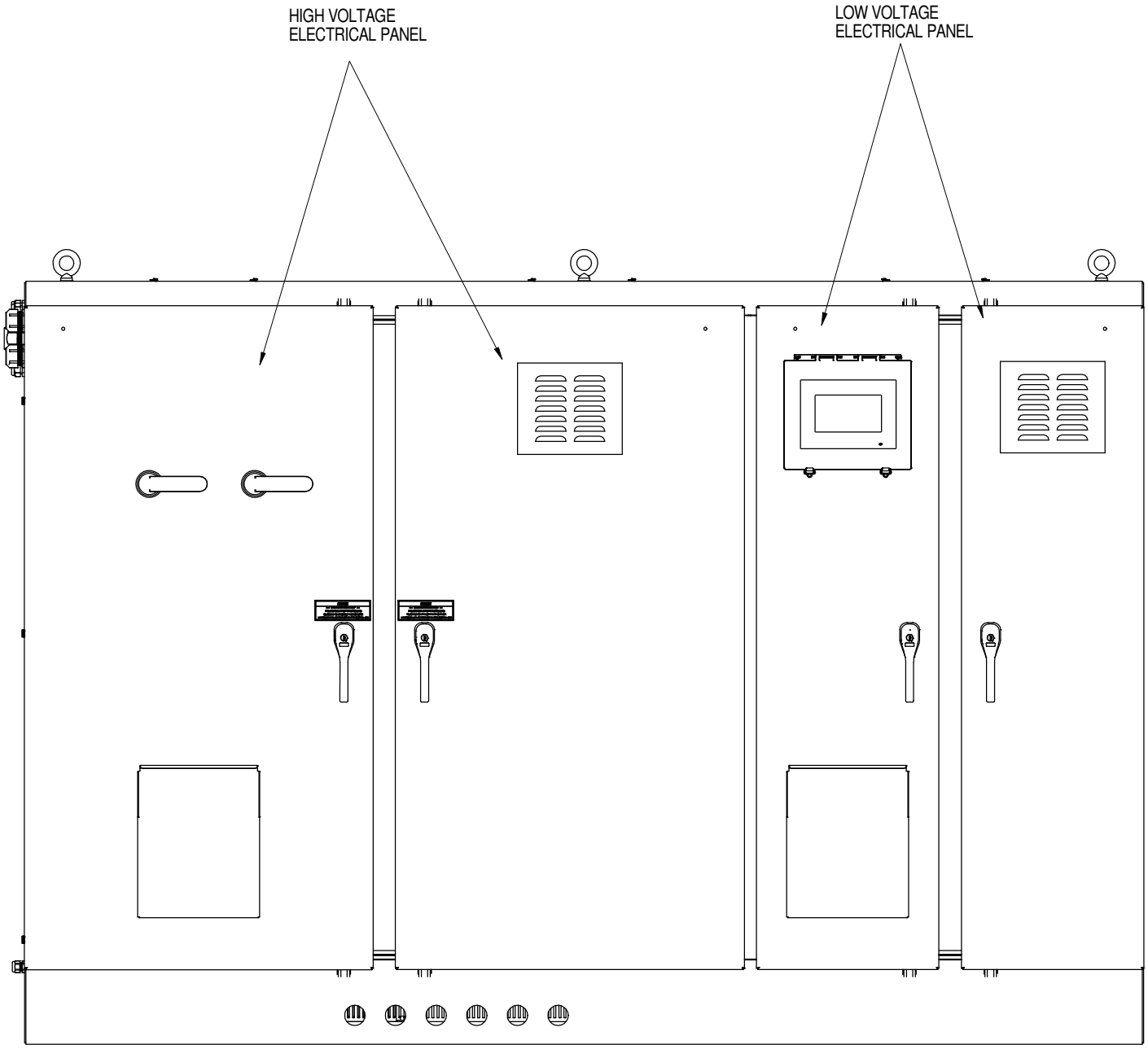

FRONT OF ELECTRICAL PANEL

ELECTRICAL FIELD CONNECTIONS

DP400/500

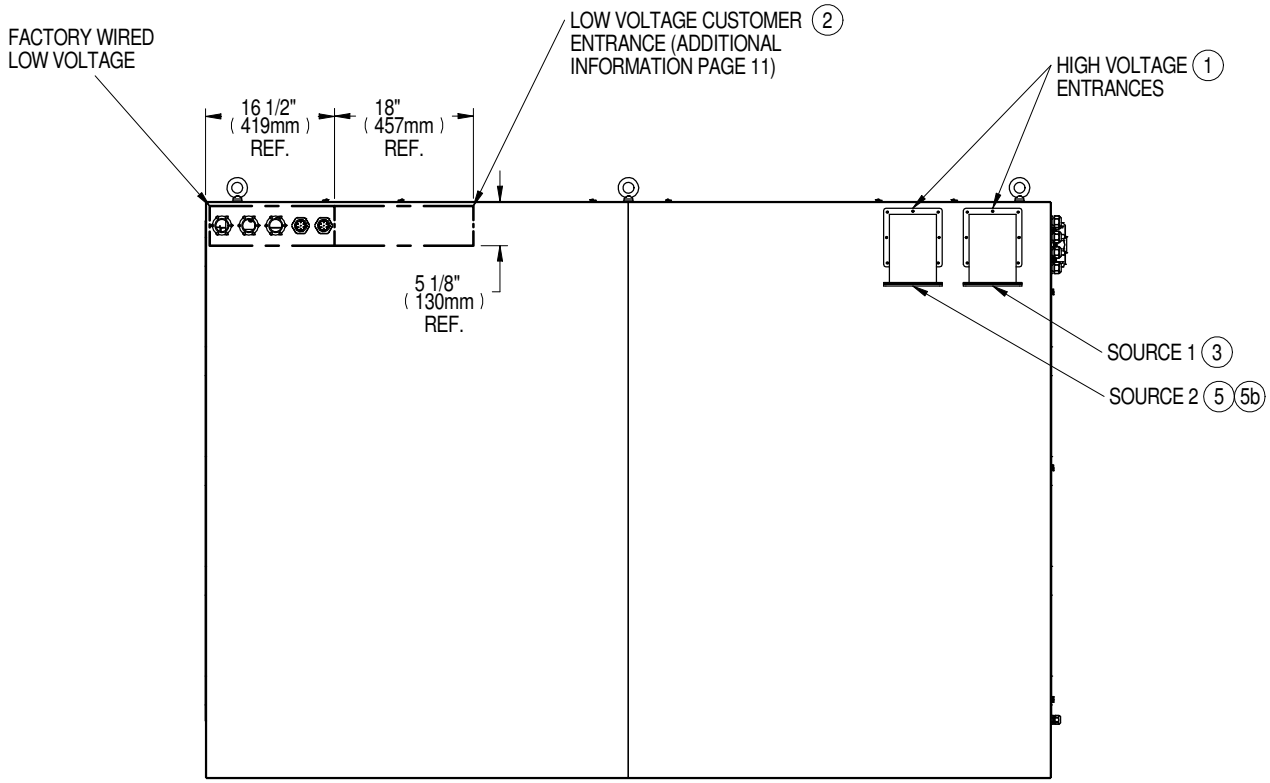

REAR OF ELECTRICAL PANEL

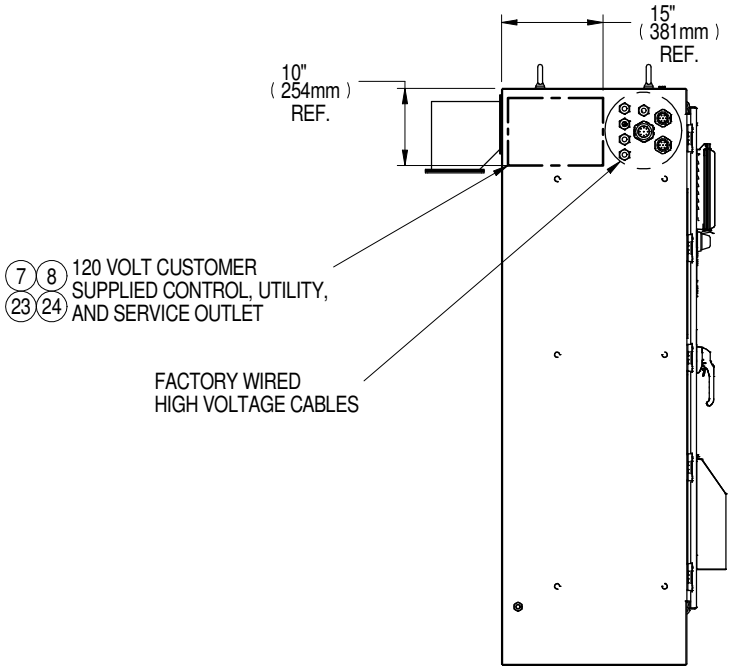

LEFT SIDE OF ELECTRICAL PANEL

ELECTRICAL FIELD CONNECTIONS

DP400/50

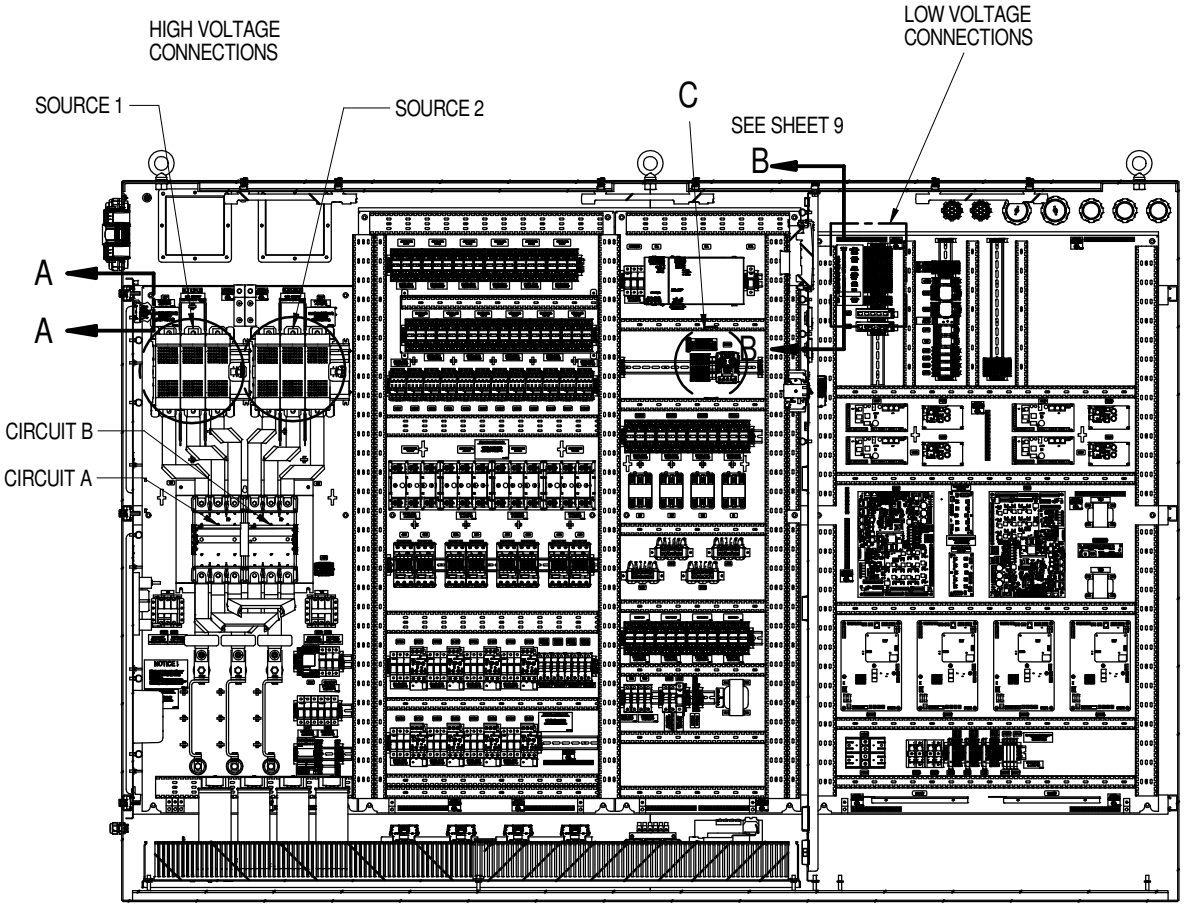

FRONT OF ELECTRICAL PANEL

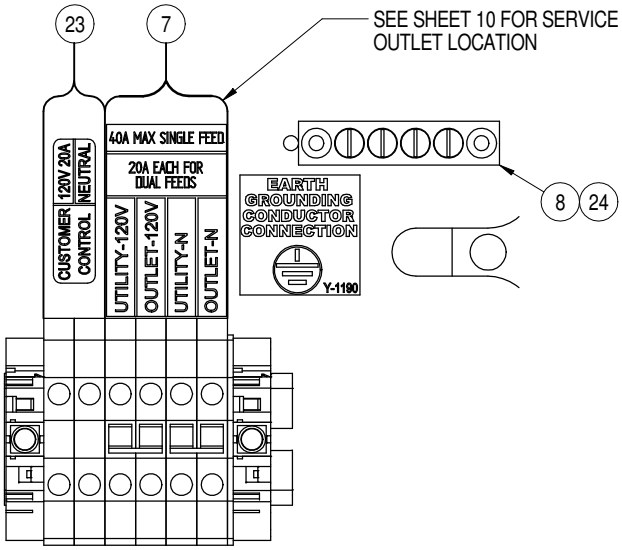

SECTION A-A

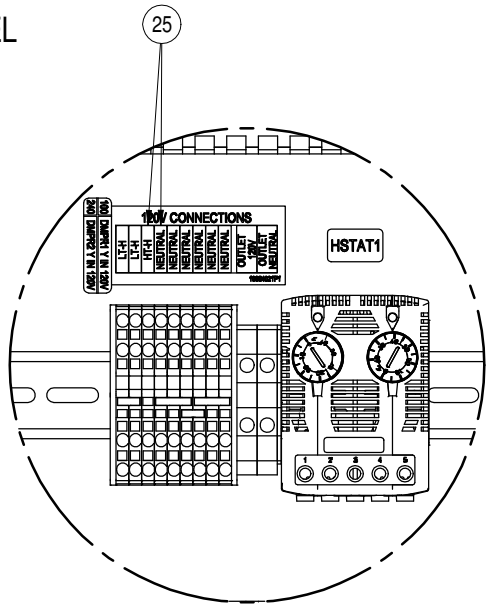

DETAIL C

ELECTRICAL FIELD CONNECTIONS

DP400/500

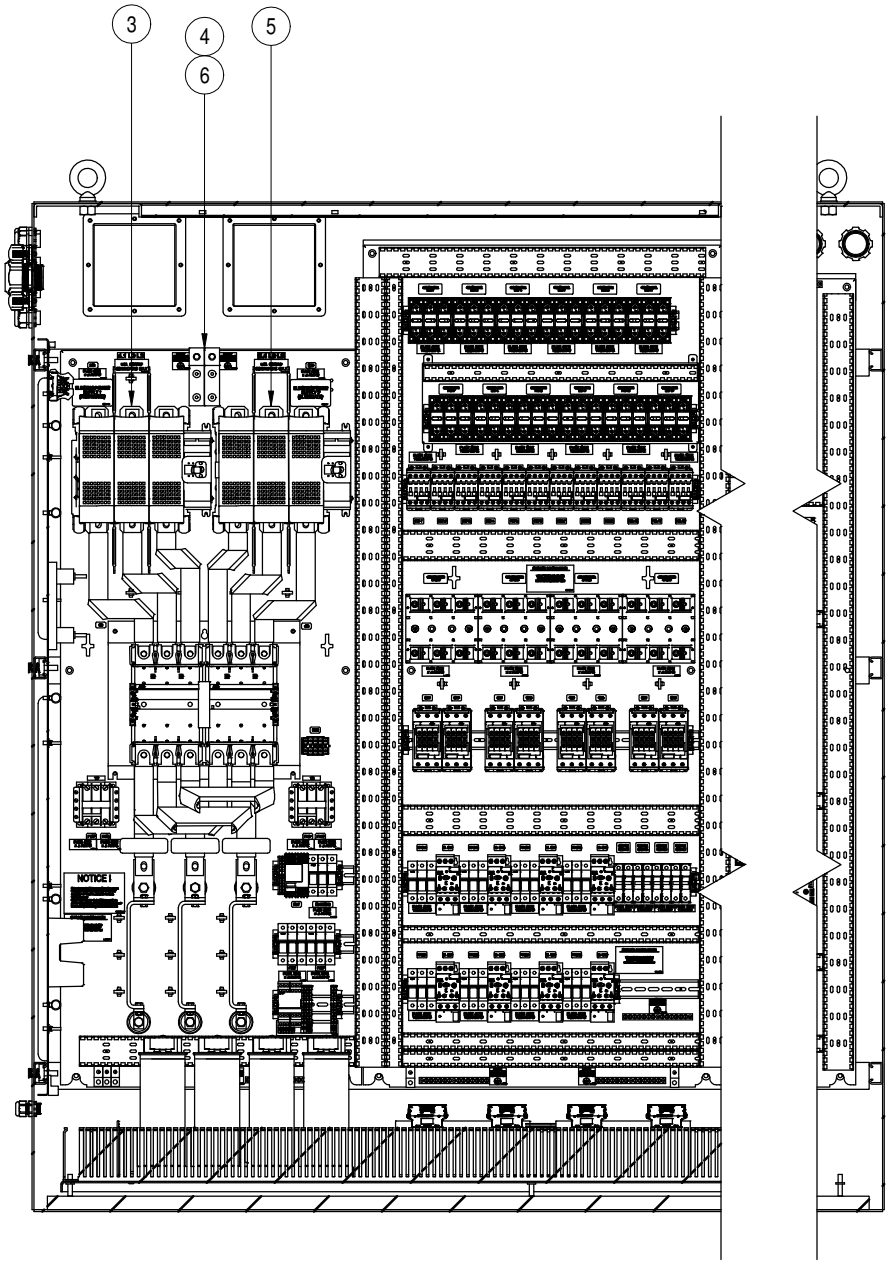

FRONT OF ELECTRICAL PANEL
HIGH VOLTAGE

ELECTRICAL FIELD CONNECTIONS

DP400/500

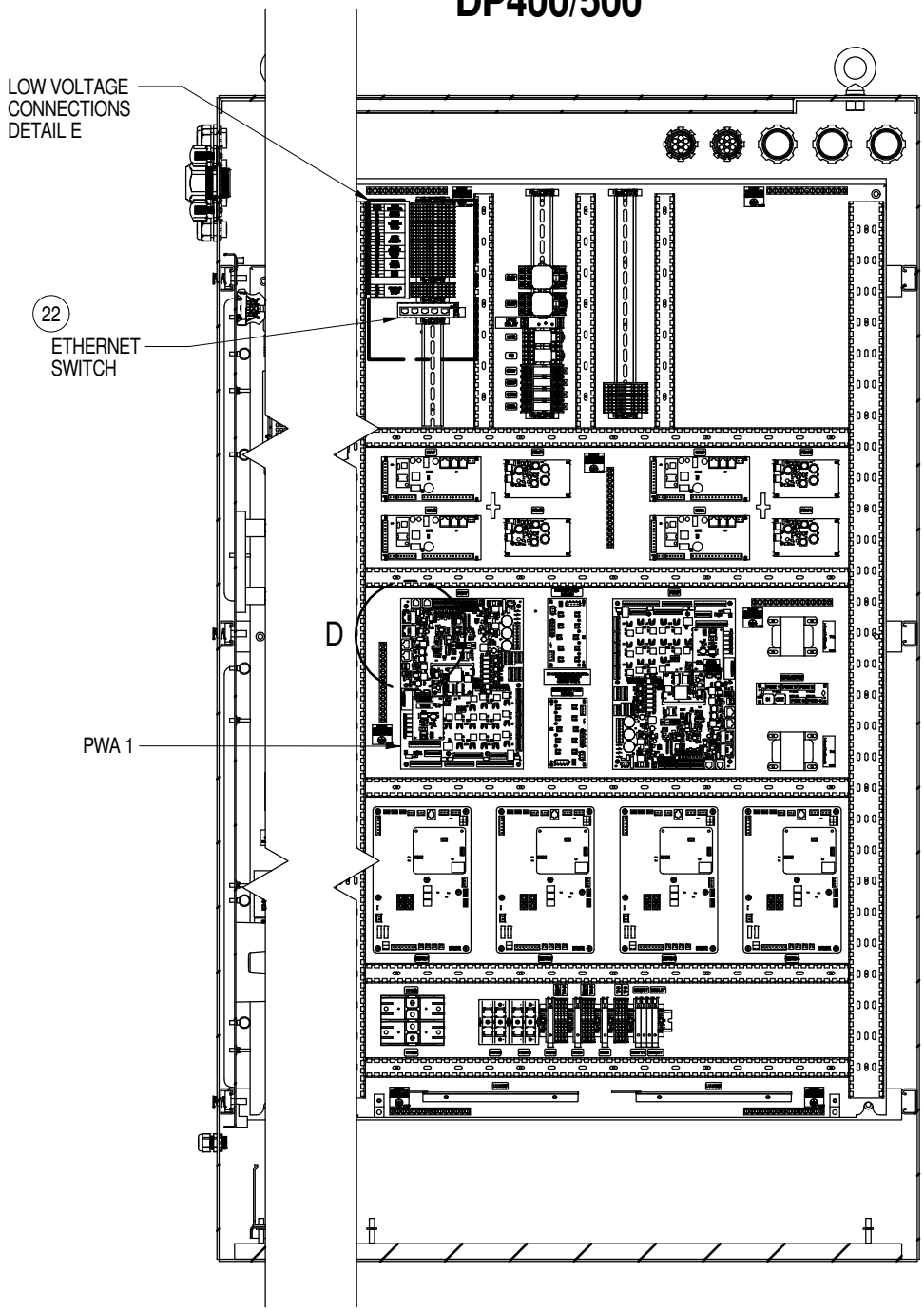

FRONT OF ELECTRICAL PANEL
LOW VOLTAGE

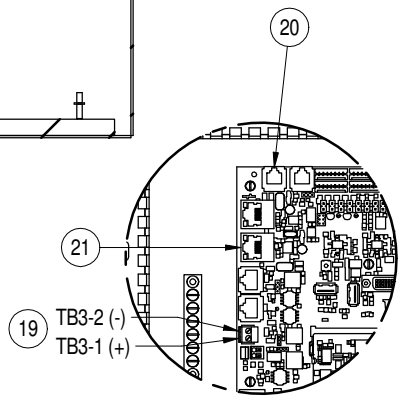

DETAIL D

ELECTRICAL FIELD CONNECTIONS

DP400/500

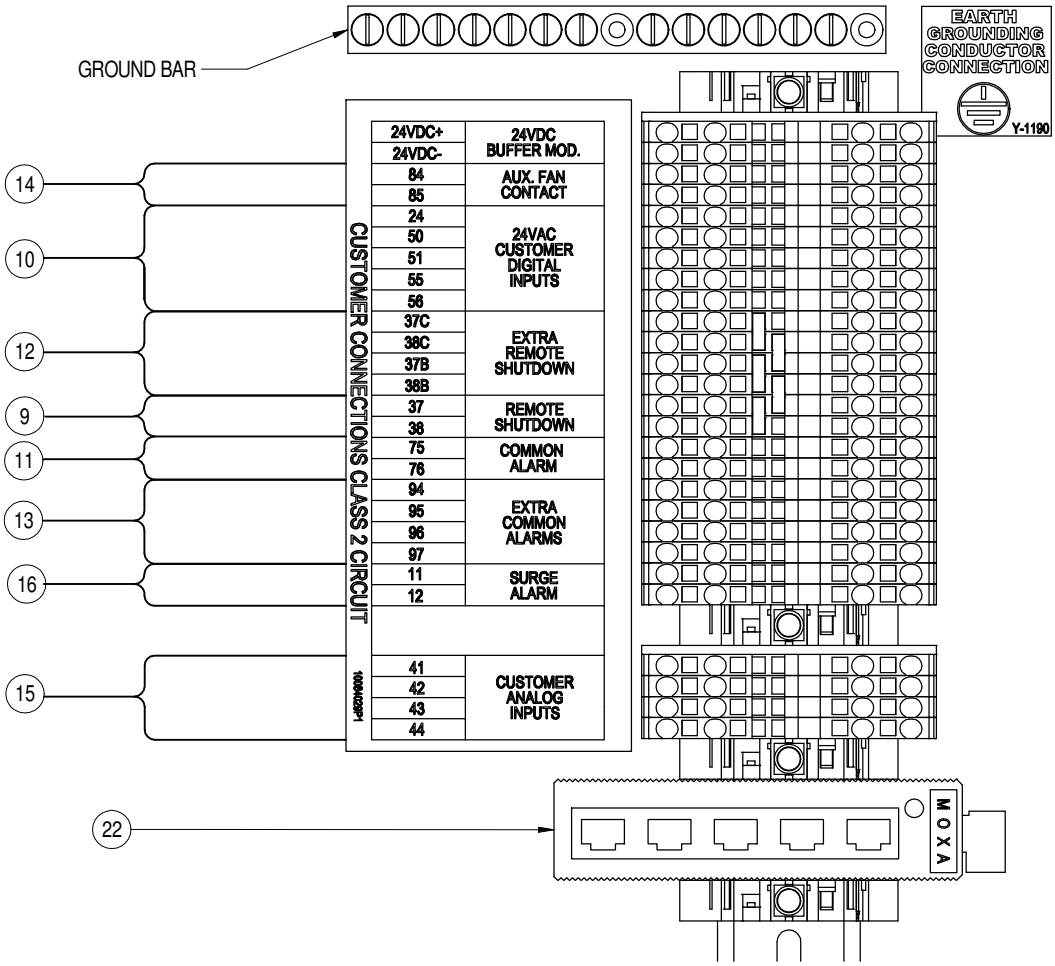

DETAIL E
LOW VOLTAGE CUSTOMER CONNECTIONS

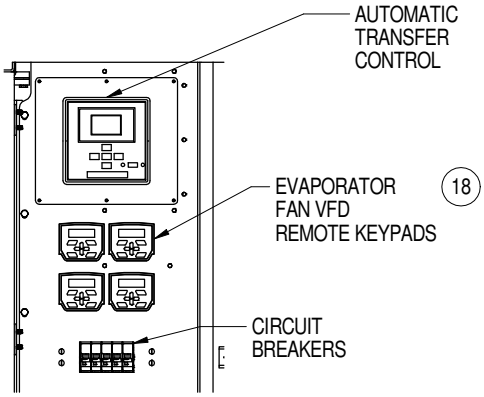

SECTION B-B

ELECTRICAL FIELD CONNECTIONS

DP400/500

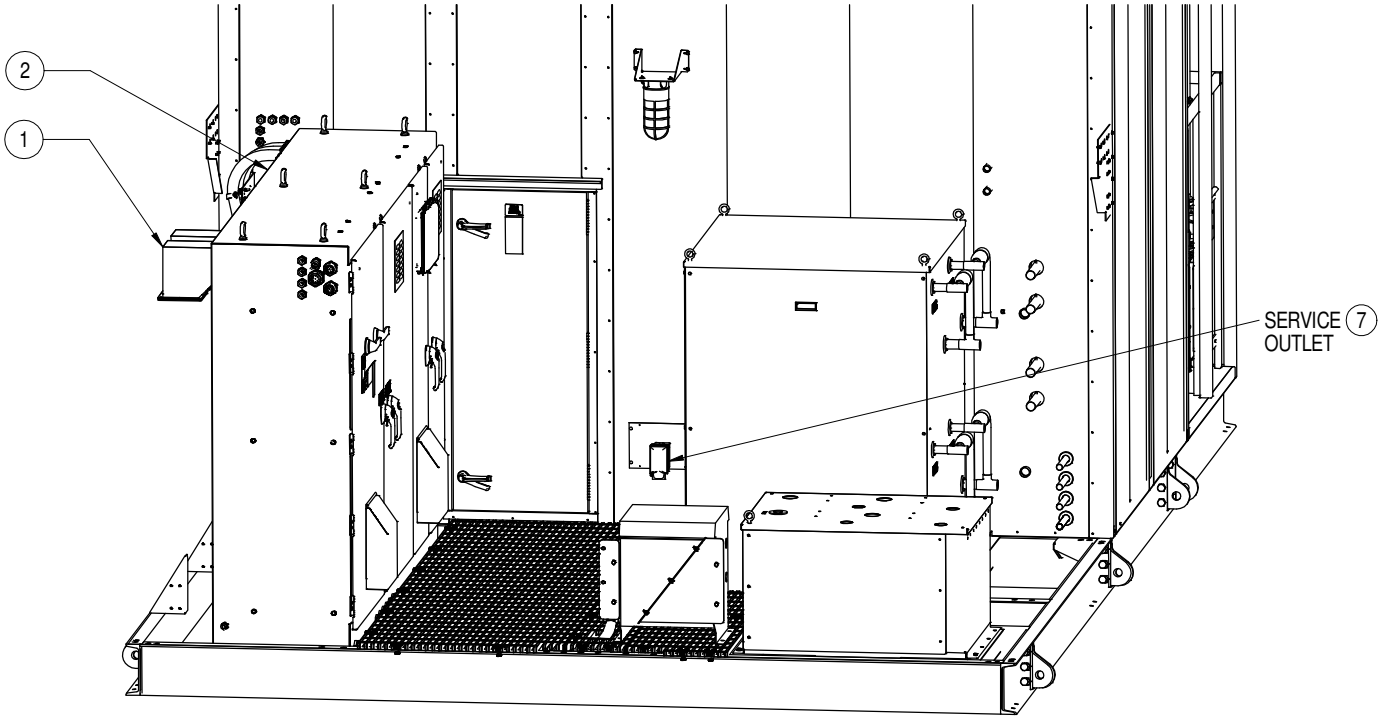

REAR OF THE DP400 (PARTS NOT SHOWN FOR CLARITY)
CONVENIENCE OUTLET LOCATION

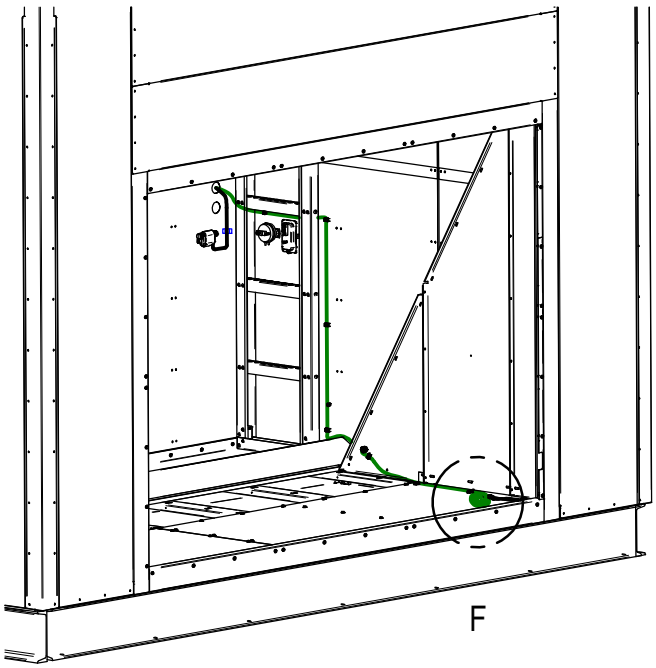

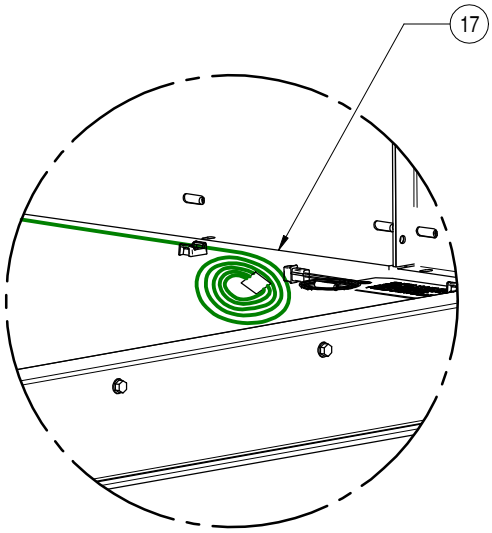

DETAIL F

FRONT OF THE DP400 (PARTS NOT SHOWN FOR CLARITY)
SUPPLY AIR SENSOR CONNECTION LOCATION

ELECTRICAL FIELD CONNECTIONS

DP400/500 HIGH VOLTAGE ENTRANCE FIELD CONNECTIONS

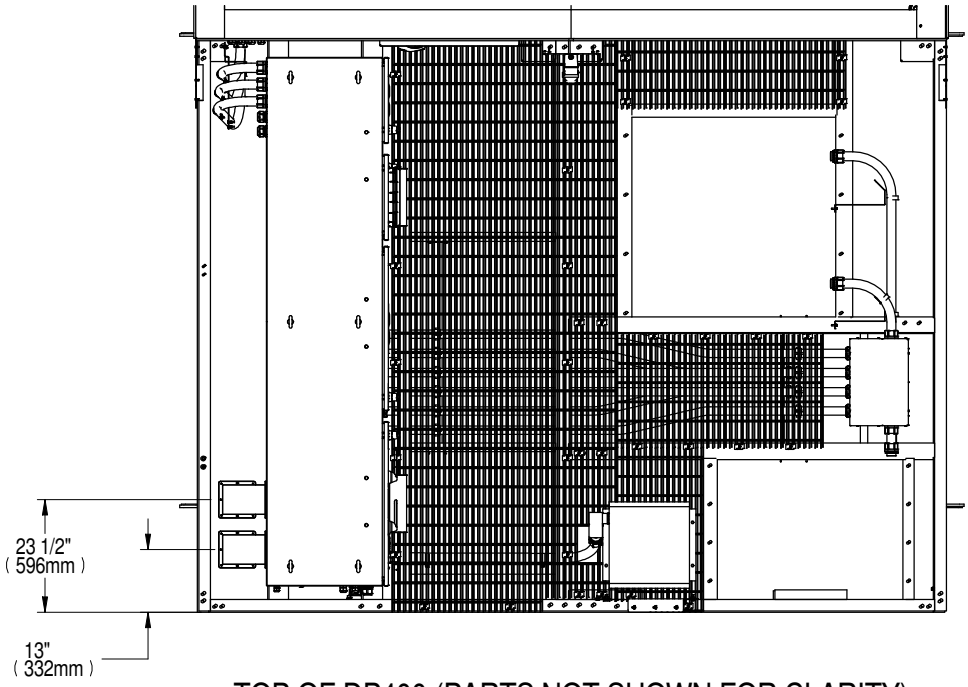

TOP OF DP400 (PARTS NOT SHOWN FOR CLARITY)

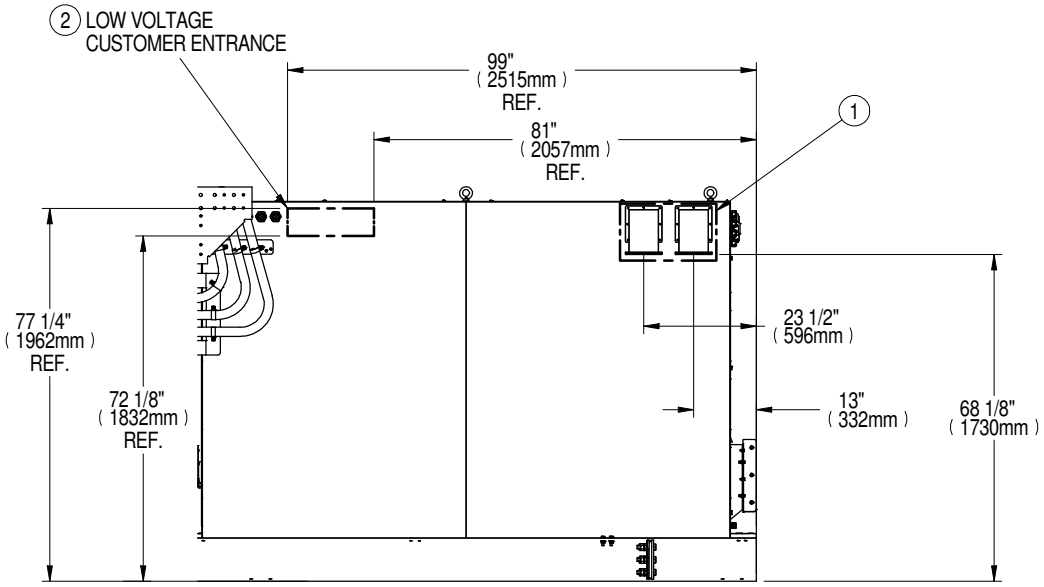

SIDE OF DP400 (PARTS NOT SHOWN FOR CLARITY)

ELECTRICAL FIELD CONNECTIONS

OPTIONAL DUAL POWER INPUT WITH TWO HV CONDUITS AND THREE LV CONDUITS FOR CUSTOMER CONNECTIONS

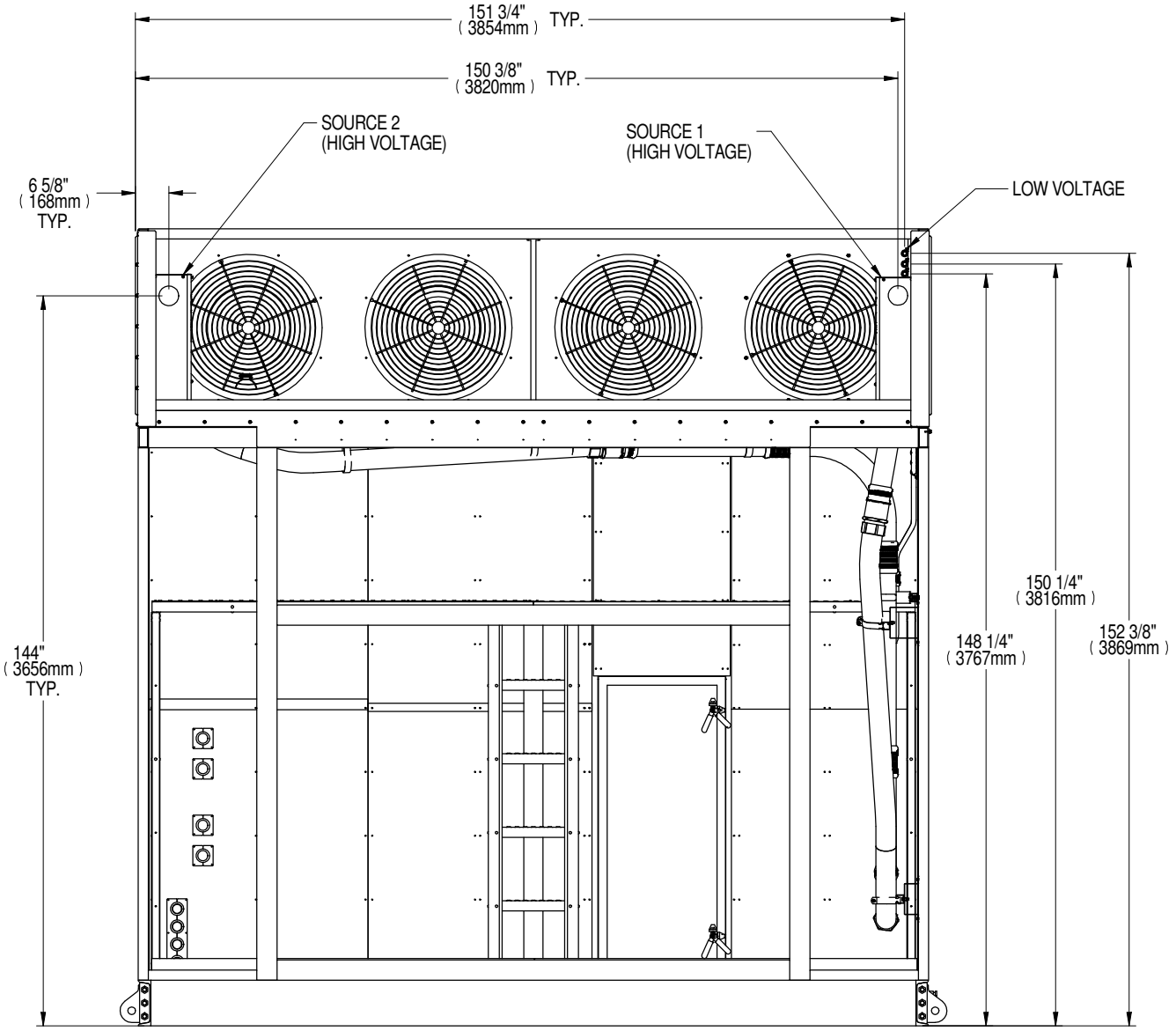

FRONT OF UNIT (PARTS NOT SHOWN FOR CLARITY)

ELECTRICAL DATA
UNITS WITH R454B

VERTIV™ CoolPhase Flex, Electrical Data, Three-Phase

Model	Voltage	Control Power (Model Digit 22)	FLA	WSA	OPD
DH400 R454B Refrigerant High Ambient Condenser Fans	460V / 60Hz	Factory Provided	304.6	309.8	350
FLA = Full Load Amps; WSA = Wire Size Amps; OPD = Maximum Overcurrent Protection Device. Digit 22 = Control Power: S = Unit Power Quick Start & Capacitive Buffer (Factory Provided)					

ELECTRICAL DATA
UNITS WITH R410A

VERTIV™ CoolPhase Flex, Electrical Data, Three-Phase

Model	Voltage	Control Power (Model Digit 22)	FLA	WSA	OPD
DH400 R410A Refrigerant High Ambient Condenser Fans	460V / 60Hz	Factory Provided	302.6	307.8	350
FLA = Full Load Amps; WSA = Wire Size Amps; OPD = Maximum Overcurrent Protection Device. Digit 22 = Control Power: S = Unit Power Quick Start & Capacitive Buffer (Factory Provided)					

ELECTRICAL DATA
UNITS WITH R454B

VERTIV™ CoolPhase Perimeter, Product Version 2.0, Electrical Data, Three-Phase

Model	Voltage	Control Power (Model Digit 22)	FLA	WSA	OPD
DP400 R454B Refrigerant Standard Condenser Fans	460V / 60Hz	Factory Provided	283.2	288.4	300
		Customer/External Provided	278.8	284.0	300
	575V / 60Hz	Factory Provided	223.5	227.6	250
		Customer/External Provided	220.1	224.2	225
DP400 R454B Refrigerant High Ambient Condenser Fans	460V / 60Hz	Factory Provided	303.6	308.8	350
		Customer/External Provided	299.2	304.4	350
	575V / 60Hz	Factory Provided	239.8	243.9	250
		Customer/External Provided	236.4	240.5	250
DP500 R454B Refrigerant Standard Condenser Fans	460V / 60Hz	Factory Provided	320.8	327.2	350
		Customer/External Provided	316.4	322.8	350
	575V / 60Hz	Factory Provided	245.9	250.7	300
		Customer/External Provided	242.5	247.3	250
DP500 R454B Refrigerant High Ambient Condenser Fans	460V / 60Hz	Factory Provided	341.2	347.6	350
		Customer/External Provided	336.8	343.2	350
	575V / 60Hz	Factory Provided	262.2	267.0	300
		Customer/External Provided	258.8	263.6	300

FLA = Full Load Amps; WSA = Wire Size Amps; OPD = Maximum Overcurrent Protection Device.

Digit 22 = Control Power: 0 = Powered from Main Input Feed (Factory Provided), S = Unit Power Quick Start & Capacitive Buffer (Factory Provided), A = Powered via Separate Customer Supplied 120V Feed (Customer/External Source)

ELECTRICAL DATA
PACKAGED UNITS WITH R410A

DSE Packaged, Product Version 2.0, Electrical Data, Three-Phase

Model	Voltage	Control Power (Model Digit 22)	FLA	WSA	OPD
DP400 R410A Refrigerant Standard Condenser Fans	460V / 60Hz	Factory Provided	281.6	286.8	300
		Customer/External Provided	277.2	282.4	300
	575V / 60Hz	Factory Provided	223.5	227.6	250
		Customer/External Provided	220.1	224.2	225
DP400 R410A Refrigerant High Ambient Condenser Fans	460V / 60Hz	Factory Provided	302.0	307.2	350
		Customer/External Provided	297.6	302.8	350
	575V / 60Hz	Factory Provided	239.8	243.9	250
		Customer/External Provided	236.4	240.5	250
DP500 R410A Refrigerant Standard Condenser Fans	460V / 60Hz	Factory Provided	331.2	337.9	350
		Customer/External Provided	326.8	333.5	350
	575V / 60Hz	Factory Provided	281.9	287.8	300
		Customer/External Provided	278.5	284.4	300
DP500 R410A Refrigerant High Ambient Condenser Fans	460V / 60Hz	Factory Provided	351.6	358.3	400
		Customer/External Provided	347.2	353.9	400
	575V / 60Hz	Factory Provided	298.2	304.1	350
		Customer/External Provided	294.8	300.7	350

FLA = Full Load Amps; WSA = Wire Size Amps; OPD = Maximum Overcurrent Protection Device.

Digit 22 = Control Power: 0 = Powered from Main Input Feed (Factory Provided), S = Unit Power Quick Start & Capacitive Buffer (Factory Provided), A = Powered via Separate Customer Supplied 120V Feed (Customer/External Source)

ELECTRICAL DATA
PACKAGED UNITS WITH R410A

DSE Packaged, Product Version 1, Electrical Data, Three-Phase

Model	Voltage	Control Power (Model Digit 22)	FLA	WSA	OPD
DP400 R410A Refrigerant Standard Condenser Fans	460V / 60Hz	Factory Provided	285.4	290.7	300
		Customer/External Provided	283.2	288.5	300
	575V / 60Hz	Factory Provided	227.8	232.0	250
		Customer/External Provided	226.1	230.3	250
DP400 R410A Refrigerant High Ambient Condenser Fans	460V / 60Hz	Factory Provided	305.8	311.1	350
		Customer/External Provided	303.6	308.9	350
	575V / 60Hz	Factory Provided	244.1	248.4	250
		Customer/External Provided	242.4	246.7	250
DP500 R410A Refrigerant Standard Condenser Fans	460V / 60Hz	Factory Provided	335.0	341.7	350
		Customer/External Provided	332.8	339.5	350
	575V / 60Hz	Factory Provided	286.2	292.1	300
		Customer/External Provided	284.5	290.4	300
DP500 R410A Refrigerant High Ambient Condenser Fans	460V / 60Hz	Factory Provided	355.4	362.1	400
		Customer/External Provided	353.2	359.9	400
	575V / 60Hz	Factory Provided	302.5	308.4	350
		Customer/External Provided	300.8	306.7	350

FLA = Full Load Amps; WSA = Wire Size Amps; OPD = Maximum Overcurrent Protection Device.

Digit 22 = Control Power: 0 = Powered from Main Input Feed (Factory Provided), S = Unit Power Quick Start & Capacitive Buffer (Factory Provided), A = Powered via Separate Customer Supplied 120V Feed (Customer/External Source)

COOLPHASE FLEX

RIGGING INSTRUCTIONS
400kW HYBRID PERIMETER UNIT

Note:
1. Inspect unit for damages.
2. Clear area of all unnecessary personnel.
3. Clear area of any debris, unrelated tools, or foreign objects.
4. Use indicated lifting lugs to lift the unit. Use spreader bars (provided by others) and/or shimmed blocks to prevent external damage.
5. Unit must be lifted level. Tilting can cause damage to the equipment inside. Use shims or blocks for leveling when placing the unit on the ground before lifting.
6. Approximate Shipping Weight:

Model	Capacity	Shipping Wt.
DH400F	400kW	28,000 lbs. (12,700 kg)
DH500F	500kW	29,500 lbs. (17,917 kg)

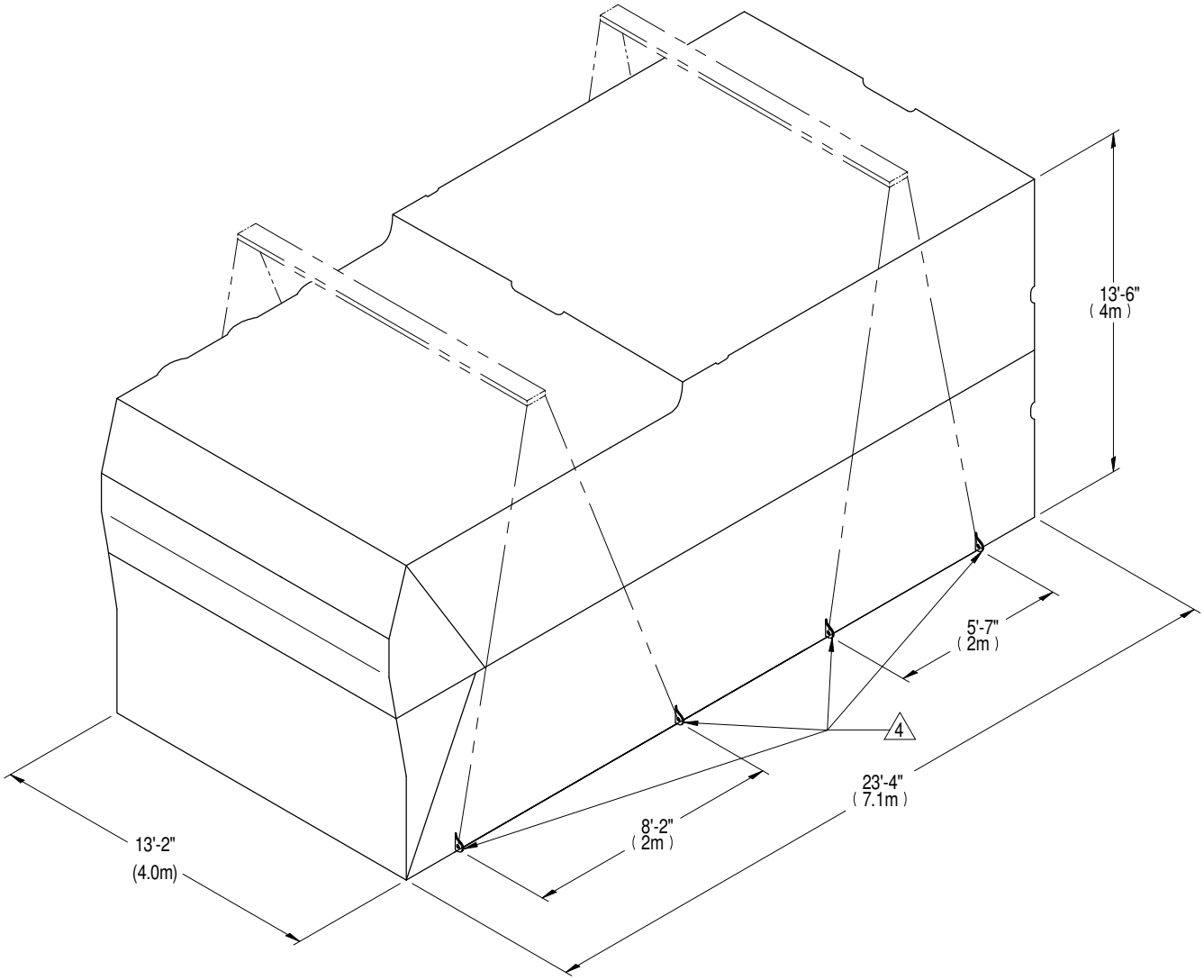

COOLPHASE FLEX

LIQUID COOLING CONVERSION
400kW HYBRID PERIMETER UNIT

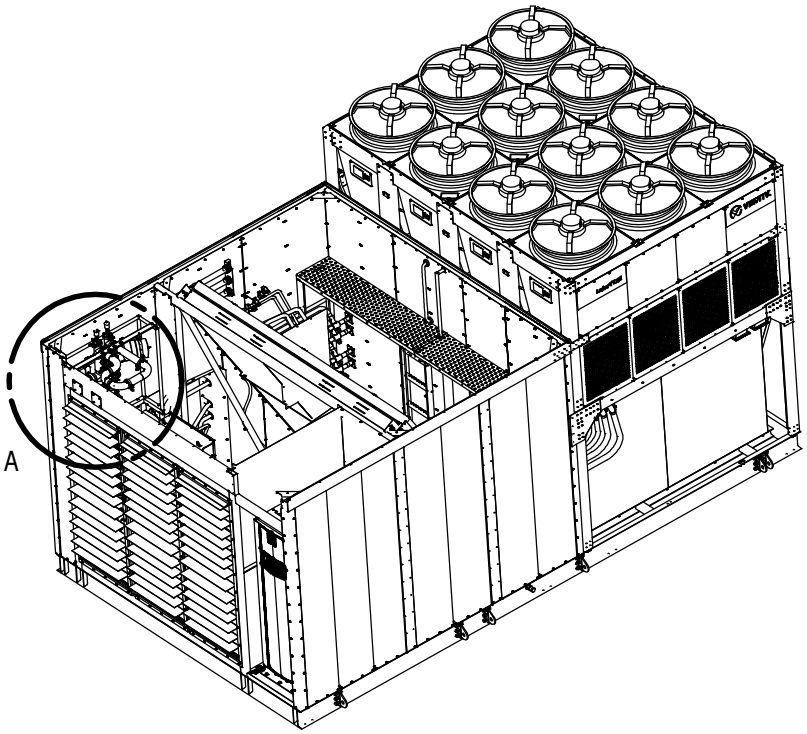

FACTORY CONFIGURATION

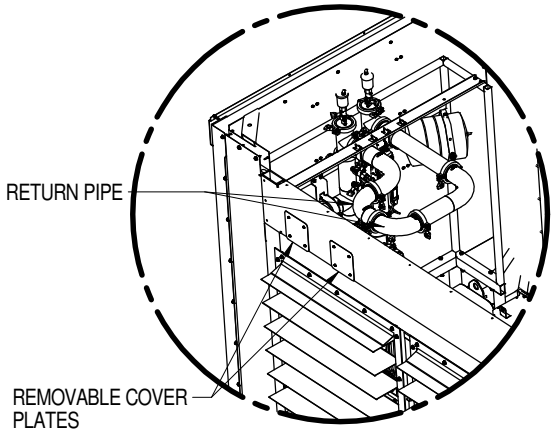

DETAIL A

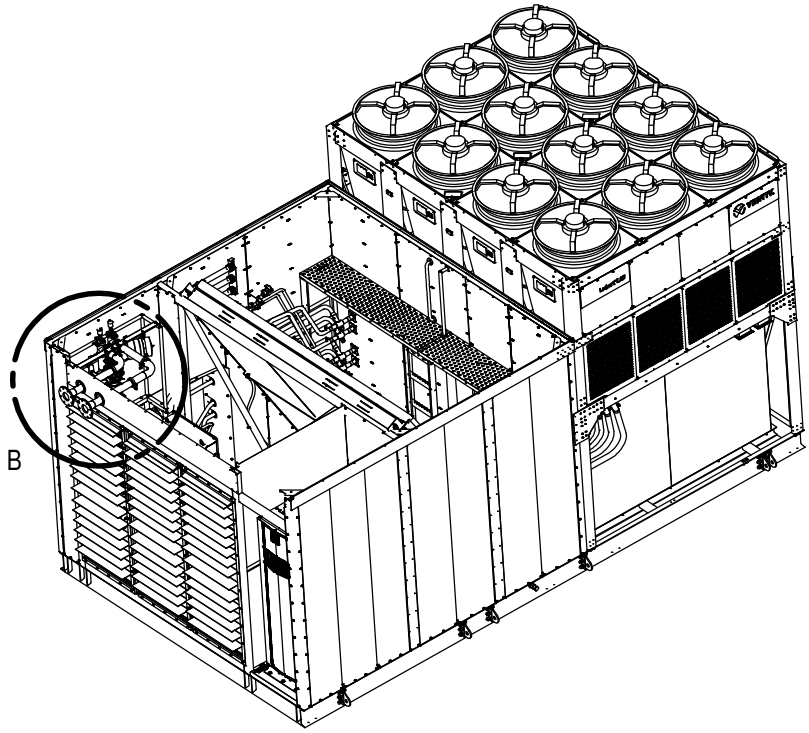

LIQUID COOLED CONFIGURATION

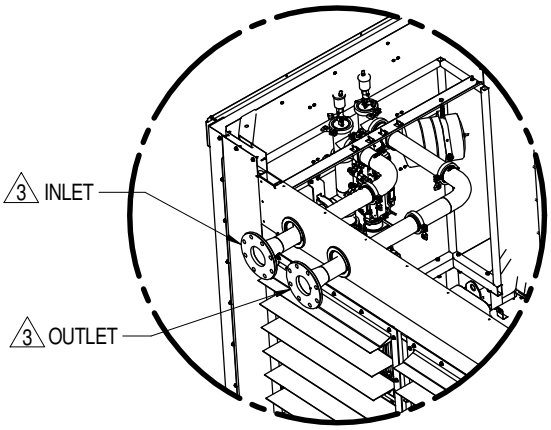

DETAIL B

Notes:

1. Parts hidden for clarity
2. Detail B shows to completed installation of liquid cooling field install kit.

3. See page 2 for detail view of flanged connection.

COOLPHASE FLEX

LIQUID COOLING CONVERSION
400kW HYBRID PERIMETER UNIT

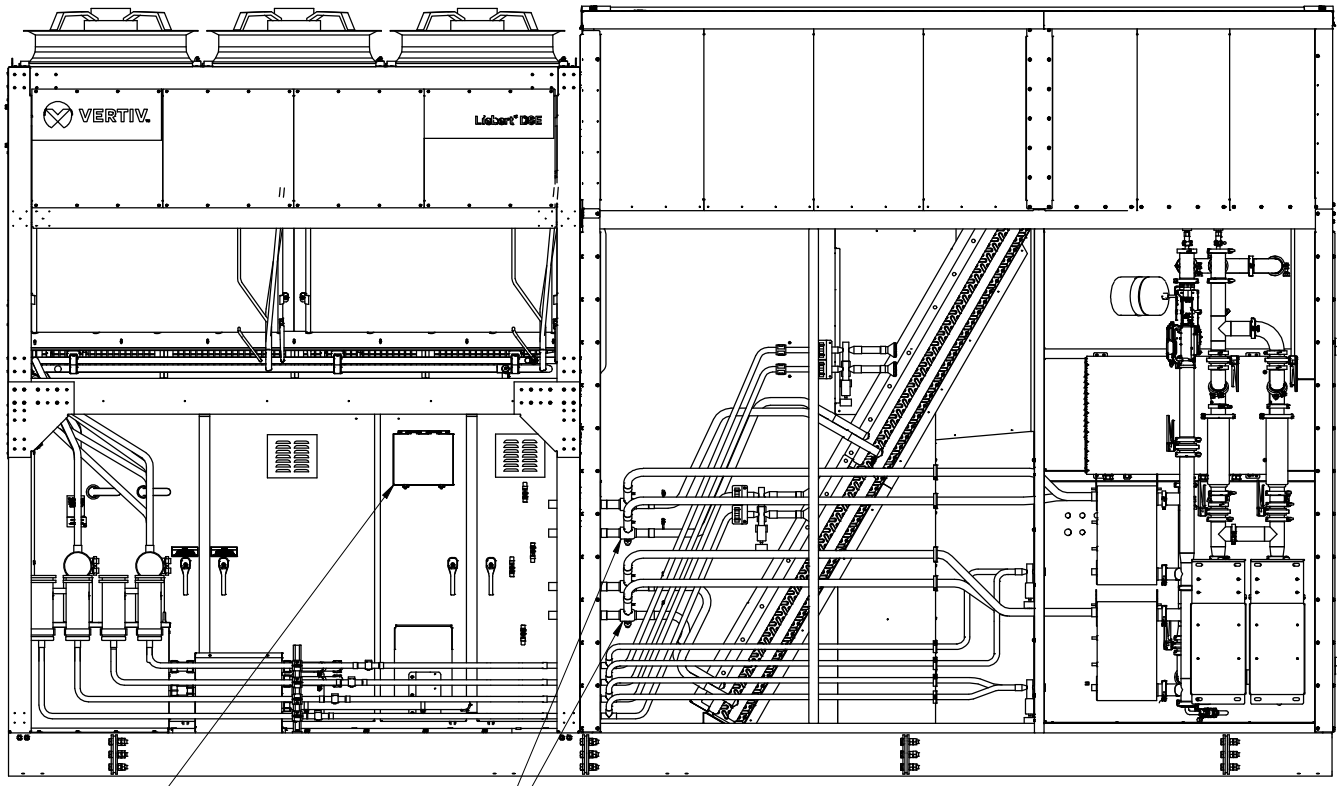

LIEBERT® iCOM (CUTOUT FOR CLARITY)

3-WAY BALL VALVES (TYP. 4 PLCS.)

SIDE OF UNIT

Notes:

1. Parts hidden for clarity
2. Set ball valve to liquid cooling mode.
3. Adjust refrigerant charge for liquid cooling conversion.
4. Change iCOM to liquid cooling mode.
5. Refer to manual for details.

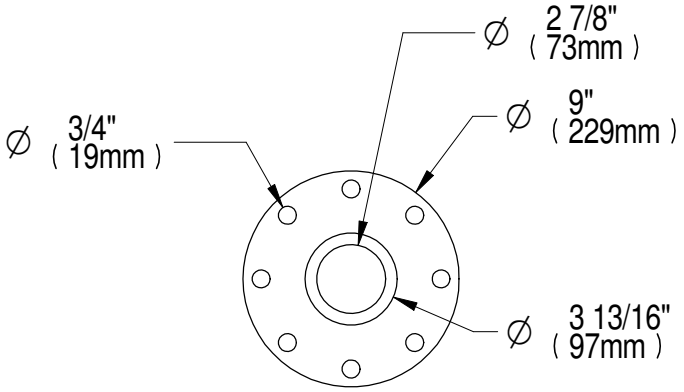

LIQUID COOLING CUSTOMER CONNECTION FLANGE

Connect with Vertiv on Social Media

https://www.facebook.com/vertiv/

https://www.instagram.com/vertiv/

https://www.linkedin.com/company/vertiv/

https://www.x.com/Vertiv/

Vertiv.com | Vertiv Headquarters, 505 N. Cleveland Ave., Westerville, OH 43082, USA

© 2026 Vertiv Group Corp. All rights reserved. Vertiv™ and the Vertiv logo are trademarks or registered trademarks of Vertiv Group Corp. All other names and logos referred to are trade names, trademarks or registered trademarks of their respective owners. While every precaution has been taken to ensure accuracy and completeness here, Vertiv Group Corp. assumes no responsibility, and disclaims all liability, for damages resulting from use of this information or for any errors or omissions.

SL-80316_REVC_10-26