PowerDirect Rack
50 VDC Power System

Installation and User Manual

Specification Number: 1PSS5033
Model Number: PSS5033

The information contained in this document is subject to change without notice and may not be suitable for all applications. While every precaution has been taken to ensure the accuracy and completeness of this document, Vertiv assumes no responsibility and disclaims all liability for damages resulting from use of this information or for any errors or omissions. Refer to other local practices or building codes as applicable for the correct methods, tools, and materials to be used in performing procedures not specifically described in this document.

The products covered by this instruction manual are manufactured and/or sold by Vertiv. This document is the property of Vertiv and contains confidential and proprietary information owned by Vertiv. Any copying, use or disclosure of it without the written permission of Vertiv is strictly prohibited.

Names of companies and products are trademarks or registered trademarks of the respective companies. Any questions regarding usage of trademark names should be directed to the original manufacturer.

Technical Support Site

If you encounter any installation or operational issues with your product, check the pertinent section of this manual to see if the issue can be resolved by following outlined procedures.

Visit https://www.vertiv.com/support/ for additional assistance.

TABLE OF CONTENTS

Admonishments Used in this Document ..... **v**
Important Safety Instructions ..... **vi**
Safety Admonishments Definitions vi
General Safety vi
Personal Protective Equipment (PPE) vi
Hazardous Voltage vii
Maintenance and Replacement Procedures vii
Ventilation Openings vii
Handling Equipment Containing Static Sensitive Components vii
Input Voltages vii
Lockout/Tagout (LOTO) vii
AC Input Voltages vii
DC Input Voltages (less than 60 VDC) vii
DC Input Voltages (greater than or equal to 60 VDC) viii
Output Voltages viii
Lockout/Tagout (LOTO) viii
AC Output Voltages viii
DC Output Voltages (less than 60 VDC) viii
DC Output Voltages (greater than or equal to 60 VDC) viii
Battery Voltages viii
Battery Voltages (less than 60 VDC) viii
Battery Voltages (greater than or equal to 60 VDC) viii
Battery (if equipped) ix
Static Warning ..... **x**
1 Customer Documentation Package **1**
2 System Description **1**
3 Installation Acceptance Checklist **2**
4 Installing the System **3**
4.1 General Requirements 3
4.2 Inspecting the Equipment 3
4.3 Installing the Rack Mounting Rail Kit into an IT Rack 3
4.4 Installing the DC Shelf(s) into an IT Rack 5
5 Making Electrical Connections **6**
5.1 Important Safety Instructions 6
5.2 Wiring Considerations 6
5.3 Power System Frame Grounding Connection 6
5.4 50 VDC Output Connection 8
5.5 AC_Loss Interface Connection 9
5.5.1 AC_Loss Signal 9
5.6 Parallel Shelves Connection 10
5.7 AC Input and AC Input Equipment Grounding Connections 11
5.7.1 AC Input Cable Assembly (NEMA AC Input) 12

5.7.2 AC Input Cable Assembly with 60309 Plug 13
5.8 Controller Front Panel RJ45 Connectors 15
5.9 Controller Indicator Light 16
5.10 Controller Power Input/Output 16
6 Installing the PSUs and PMM 17
6.1 Installing PSUs 17
6.2 Installing the PMM 18
7 Initially Starting, Configuring, and Checking System Operation 19
7.1 Important Safety Instructions 19
7.2 Initial Startup Preparation 19
7.3 Initially Starting the System 19
8 Operating Procedures 21
8.1 PMM and PSUs 21
9 Maintenance 21
9.1 System Maintenance Procedures 21
9.2 Adding a PSU (R505500E4) to a DC Shelf 21
10 Troubleshooting and Repair 21
10.1 Contact Information 21
10.2 Controller and PSUs 21
10.3 System Troubleshooting Information 21
10.4 Replacement Information 22
10.4.1 Replacement Assemblies 22
10.5 Replacement Procedures 22
10.5.1 Important Safety Instructions 22
10.5.2 Replacing a PMM 22
10.5.3 Replacing a PSU 22

Admonishments Used in this Document

DANGER! Warns of a hazard the reader ***will*** be exposed to that will ***likely*** result in death or serious injury if not avoided. (ANSI, OSHA)

WARNING! Warns of a potential hazard the reader ***may*** be exposed to that ***could*** result in death or serious injury if not avoided. This admonition is not used for situations that pose a risk only to equipment, software, data, or service. (ANSI)

CAUTION! Warns of a potential hazard the reader ***may*** be exposed to that ***could*** result in minor or moderate injury if not avoided. (ANSI, OSHA) This admonition is not used for situations that pose a risk only to equipment, data, or service, even if such use appears to be permitted in some of the applicable standards. (OSHA)

ALERT! Alerts the reader to an action that ***must be avoided*** in order to protect equipment, software, data, or service. (ISO)

ALERT! Alerts the reader to an action that ***must be performed*** in order to prevent equipment damage, software corruption, data loss, or service interruption. (ISO)

FIRE SAFETY! Informs the reader of fire safety information, reminders, precautions, or policies, or of the locations of fire-fighting and fire-safety equipment. (ISO)

SAFETY! Informs the reader of general safety information, reminders, precautions, or policies not related to a particular source of hazard or to fire safety. (ISO, ANSI, OSHA)

Proprietary and Confidential © 2025 Vertiv Group Corp.

Important Safety Instructions

Safety Admonishments Definitions

Definitions of the safety admonishments used in this document are listed under “Admonishments Used in this Document” on page v.

General Safety

WARNING! YOU MUST FOLLOW APPROVED SAFETY PROCEDURES.

Performing the following procedures may expose you to hazards. These procedures should be performed by qualified technicians familiar with the hazards associated with this type of equipment. These hazards may include shock, energy, and/or burns. To avoid these hazards:

a) The tasks should be performed in the order indicated.

b) Remove watches, rings, and other metal objects.

c) Prior to contacting any uninsulated surface or termination, use a voltmeter to verify that no voltage or the expected voltage is present. Check for voltage with both AC and DC voltmeters prior to making contact.

d) Wear eye protection. When handling batteries, use gloves.

e) Use certified and well-maintained insulated tools. Use double insulated tools appropriately rated for the work to be performed.

f) Exercise extreme caution not to inadvertently contact or have any tool inadvertently contact an input, output, or battery terminal or exposed wire connected to an input, output, or battery terminal. NEVER allow a metal object, such as a tool, to contact more than one termination or battery terminal at a time, or to simultaneously contact a termination or battery terminal and a grounded object. Even a momentary short circuit can cause sparking, explosion, and injury.

g) After handling of the enclosure or any such component, such as batteries, cables, busbars, etc., always wash hands immediately after.

h) For systems operating with 400 VDC power, do not work on an energized system without full arc flash and PPE protection.

Personal Protective Equipment (PPE)

DANGER! ARC FLASH AND SHOCK HAZARD.

Appropriate PPE and tools required when working on this equipment. An appropriate flash protection boundary analysis should be done to determine the “hazard/risk” category, and to select proper PPE.

Only authorized and properly trained personnel should be allowed to install, inspect, operate, or maintain the equipment.

Do not work on LIVE parts. If required to work or operate live parts, obtain appropriate Energized Work Permits as required by the local authority, per NFPA 70E “Standard for Electrical Safety in the Workplace”.

Hazardous Voltage

DANGER! HAZARD OF ELECTRICAL SHOCK.
More than one disconnect may be required to de-energize the system before servicing. The DC bus may be powered by DUAL power sources – rectifiers and DC batteries. To properly work on the system, de-energize by disconnecting BOTH power sources. Even with the batteries turned off by using a local battery (circuit breaker) disconnect, batteries are still "LIVE" and hazardous, including a voltage >50 VDC, and a source of high short circuit current.

Maintenance and Replacement Procedures

ALERT! When performing any step in the procedures that requires removal or installation of hardware, use caution to ensure no hardware is dropped and left inside the unit; otherwise, service interruption or equipment damage may occur.

ALERT! Performing maintenance and/or troubleshooting procedures may interrupt power to the loads, if battery reserve is not sufficient.

NOTE! *When performing any step in the procedures that requires removal of existing hardware, retain all hardware for use in subsequent steps, unless otherwise directed.*

Ventilation Openings

ALERT! PREVENT EQUIPMENT DAMAGE, MAINTAIN VENTILATION
To optimize the service life of this equipment, make sure there are no obstructions in front of the ventilation openings.

Handling Equipment Containing Static Sensitive Components

ALERT! Installation or removal of equipment containing static sensitive components requires careful handling. Before handling any equipment containing static sensitive components, read and follow the instructions provided under "Static Warning" on page x.

Input Voltages

Refer to the input rating on the nameplate attached to the system.

Lockout/Tagout (LOTO)

DANGER! Follow local lockout/tagout procedures to ensure upstream branch circuit breakers remain de-energized during installation. DO NOT apply input power to the system until all electrical connections have been completed and checked.

AC Input Voltages

For Systems Operating with AC Input Voltage

DANGER! This system operates from AC input voltage capable of producing fatal electrical shock. AC input power must be completely disconnected from all branch-circuit's wiring used to provide power to the system before any AC electrical connections are made.

DC Input Voltages (less than 60 VDC)

For Systems Operating with DC Input Voltage less than 60 VDC

DANGER! This system operates from DC input voltage. Although the DC voltage is not hazardously high, the DC input can deliver large amounts of current. DC input power must be completely disconnected from all branch-circuit's wiring used to provide power to the system before any DC electrical connections are made.

DC Input Voltages (greater than or equal to 60 VDC)

For Systems Operating with DC Input Voltage greater than or equal to 60 VDC

DANGER! This system operates from DC input voltage. The DC voltage IS hazardously high. The DC input can deliver large amounts of current. DC input power must be completely disconnected from all branch-circuit's wiring used to provide power to the system before any DC electrical connections are made.

Output Voltages

Refer to the output rating on the nameplate attached to the system.

Lockout/Tagout (LOTO)

DANGER! Follow local lockout/tagout procedures to ensure branch circuit protection devices remain de-energized during installation at loads, as required.

AC Output Voltages

For Systems Producing AC Output Voltage

DANGER! This system produces AC power. The AC output voltage is capable of producing fatal electrical shock.

DC Output Voltages (less than 60 VDC)

For Systems Producing DC Output Voltage less than 60 VDC

DANGER! This system produces DC power. Although the DC voltage is not hazardously high, the system can deliver large amounts of current.

DC Output Voltages (greater than or equal to 60 VDC)

For Systems Producing DC Output Voltage greater than or equal to 60 VDC

DANGER! This system produces DC power. The DC voltage IS hazardously high. The system can deliver large amounts of current.

Battery Voltages

For systems operating from and/or connected to battery.

Battery Voltages (less than 60 VDC)

For Systems Having a Battery Source less than 60 VDC

DANGER! This system has a battery source connected to it. Although the battery voltage is not hazardously high, the battery can deliver large amounts of current.

Battery Voltages (greater than or equal to 60 VDC)

For Systems Having a Battery Source greater than or equal to 60 VDC

DANGER! This system has a battery source connected to it. The battery voltage IS hazardously high. The battery can deliver large amounts of current.

Proprietary and Confidential © 2025 Vertiv Group Corp.

Battery (if equipped)

Refer to the battery manufacturer documentation for specific battery safety instructions. The following are general guidelines.

DANGER! An OFF battery switch / breaker does not isolate the batteries, nor do the batteries have a protective fuse. Thus, handle accordingly and use only insulated tools when working around batteries or any DC potential.

WARNING! Correct polarity must be observed when connecting battery leads.

WARNING! Special safety precautions are required for procedures involving handling, installing, and servicing batteries. Observe all battery safety precautions in this document and in the battery instruction manual. These precautions should be followed implicitly at all times.

WARNING! A battery can present a risk of electrical shock and high short circuit current. Servicing of batteries should be performed or supervised only by properly trained and qualified personnel knowledgeable about batteries and the required precautions.

The following precautions should be observed when working on batteries:

- Follow the recommended PPE requirements per the SDS for the battery to be used.
- A battery can present harmful chemicals. Refer to the battery installation manuals and MSDS supplied with the batteries. Work in a ventilated area and follow all safety procedures.
- Batteries are an energy source that can produce high amounts of electrical current.
- Remove watches, rings, and other metal objects.
- Eye protection should be worn to prevent injury from accidental electrical arcs. When handling batteries, use gloves.
- Use certified and well-maintained insulated tools. Use double insulated tools appropriately rated for the work to be performed. Ensure that wrenches with more than one working end have only one end exposed.
- Do not lay tools or metal parts on top of batteries.
- Verify that no current will flow when the battery is connected or disconnected by opening battery disconnects (if available) or adjusting the system to match battery voltage.
- Risk of explosion if battery is replaced with an incorrect type or if polarity is reversed. Recommended to replace batteries with the same manufacturer and type, or equivalent.
- Dispose of used batteries according to the instructions provided with the batteries. Do not dispose of batteries in a fire. They may explode.
- Batteries may generate explosive gases during normal operation. Systems containing batteries should never be installed in an airtight room or space. Only install in a ventilated environment. Do not smoke.
- Batteries may contain sulfuric acid. If battery acid enters your eye, immediately flush your eye with running cold water for at least 15 minutes. Get medical attention immediately. If battery acid contacts skin or clothing, wash immediately with soap and water.
- Do not open or mutilate batteries.
- ALWAYS FOLLOW THE BATTERY MANUFACTURER'S RECOMMENDATIONS AND SAFETY INSTRUCTIONS.

Proprietary and Confidential © 2025 Vertiv Group Corp.

Static Warning

This equipment contains static sensitive components. The warnings listed below must be observed to prevent damage to these components. Disregarding any of these warnings may result in personal injury or damage to the equipment.

1. Strictly adhere to the procedures provided in this document.
2. Before touching any equipment containing static sensitive components, discharge all static electricity from yourself by wearing a wrist strap grounded through a one megohm resistor. Some wrist straps have a built-in one megohm resistor; no external resistor is necessary. Read and follow wrist strap manufacturer's instructions outlining use of a specific wrist strap.
3. Do not touch traces or components on equipment containing static sensitive components. Handle equipment containing static sensitive components only by the edges that do not have connector pads.
4. After removing equipment containing static sensitive components, place the equipment only on static dissipative surfaces such as conductive foam or ESD bag. Do not use ordinary Styrofoam or ordinary plastic.
5. Store and ship equipment containing static sensitive components only in static shielding containers.
6. If necessary to repair equipment containing static sensitive components, wear an appropriately grounded wrist strap, work on a conductive surface, use a grounded soldering iron, and use grounded test equipment.

Proprietary and Confidential © 2025 Vertiv Group Corp.

1 Customer Documentation Package

This document (UM1PSS5033 I*nstallation and User Instructions)* for the Vertiv™ PowerDirect Rack 50 VDC Power System: Model PSS5033, Spec. No. 1PSS5033.

The complete Customer Documentation Package consists of…

Document Number	Document Description	How Provided
UM1PSS5033	Power System Installation and User Instructions	PDF File
SAG1PSS5033	System Application Guide	PDF File
UM1PMM1S0	System Controller User Instructions	PDF File
UM1R505500E4	Power Supply Unit Instructions	PDF File

2 System Description

The Vertiv™ PowerDirect Rack Model PSS5033 50 VDC Power System is an integrated power system containing power supply units (PSU), a DC shelf and system controller PMM.

50 VDC @ up to 132 kW (Up to eight (8) shelves (4+4 Redundancy Configuration) can be configured in a single system)

The capacity of a single shelf is 33 kW / 50 VDC.

Refer to SAG1PSS5033 (System Application Guide) for additional information.

Safety Requirements

System Rated input Voltage and Current

- Three phase input:

  Three phase WYE: 29.9 A Maximum @ 346 VAC / 200 VAC to 480 VAC / 277 VAC, per Input

- Single phase: 89.7 A @ 230 VAC to 240 VAC, per input

DC Shelf

The DC shelf houses up to six (6) PSUs. Up to eight (8) shelves (4+4 Redundancy Configuration) can be configured in a single system. Each shelf in the system also houses the controller.

System Controller

The PMM is a power monitoring module, which collects PSU/BBUs signals and report the collected data to an external management unit as a Modbus server. PMM sits on Open Rack V3 Power and Battery Shelves. It is connected to the PSUs or BBUs in the shelf through the system back board and connected to the centralized system or cascaded expansion shelf through the front RJ45 connectors.

PSUs

The system contains PSUs which provide load power and battery recharge current (when applicable) during normal operating conditions. Refer to the Power Supply Unit Instructions (UM1R505500E4) for more information.

Proprietary and Confidential © 2025 Vertiv Group Corp.

Figure 2.1 Vertiv™ PowerDirect Rack 50 VDC Power System Overview Illustration

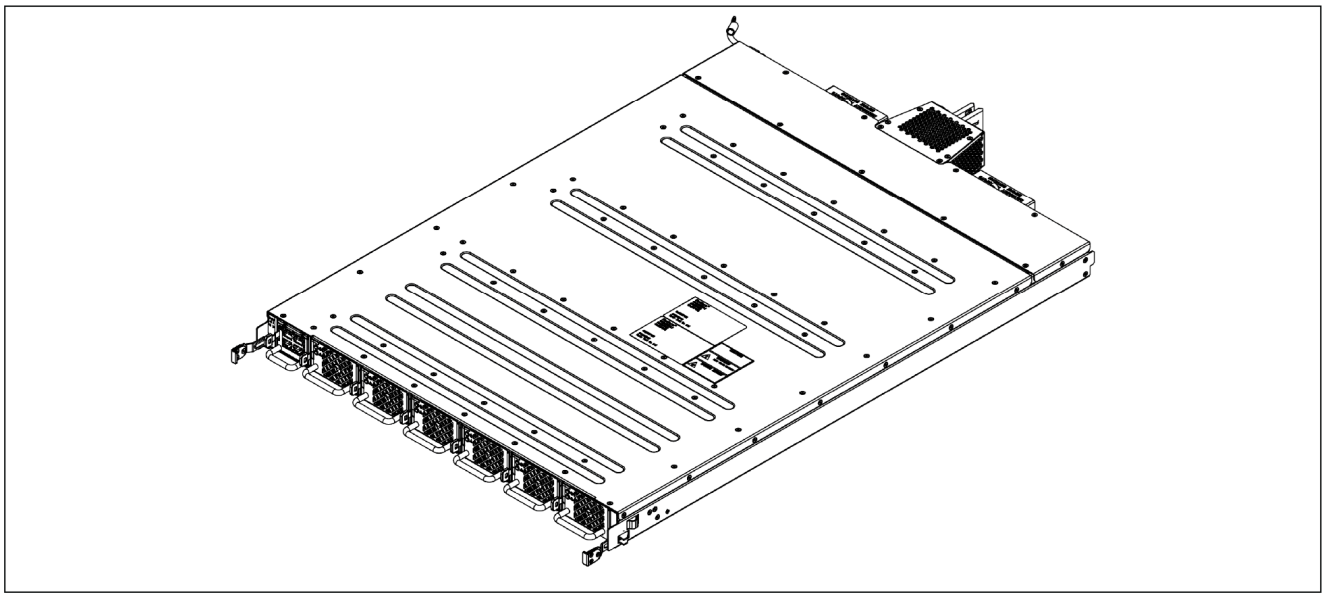

3 Installation Acceptance Checklist

Provided in this section is an Installation Acceptance Checklist. This checklist helps ensure proper installation and initial operation of the system. As the procedures presented in this document are completed, check the appropriate box on this list. If the procedure is not required to be performed for your installation site, also check the box in this list to indicate that the procedure was read. When installation is done, ensure that each block in this list has been checked. Some of these procedures may have been factory performed for you.

NOTE! *The system should not be powered up until the end of this checklist.*

NOTE! *Some of these procedures may have been performed at the factory for you.*

Installing the System

- ❑ Equipment Inspection Completed
- ❑ Shelf Busbar clip fully mated with rack busbar
- ❑ DC Shelf(s) Mounted in a Rack

Making Electrical Connections

- ❑ Power System Frame Grounding Connection Made
- ❑ 50 VDC Output Connection Made
- ❑ AC_Loss Interface Connection Made (if being used with a battery backup system)
- ❑ Parallel Shelves Connection Made between PMMs
- ❑ AC Input and AC Input Equipment Grounding Connections Made

Installing the PSUs

- ❑ PSUs Installed, as required

Initially Starting, Configuring, and Checking System Operation

- ❑ System Started, Configured, and Checked

4 Installing the System

4.1 General Requirements

- This product is intended only for installation in a restricted access location on or above a non-combustible surface.
- This product must be located in a controlled environment with access to craft persons only.
- This product is intended for installation in data centers or network telecommunication facilities (CO, vault, hut, or other environmentally controlled electronic equipment enclosure).
- This product is intended to be installed in a data center facility and be connected to a rack management unit, and the rack management unit directly monitors the status of the PSU through the PMM.
- PSU and DC shelf ventilating openings must not be blocked and temperature of air entering these must not exceed rated operating ambient temperature range.
- DC shelves are installed on the rails in the rack.

4.2 Inspecting the Equipment

General

1. Check the packing slip to make sure all components ordered were received. Report any missing items to the carrier and your local sales representative immediately.
2. Inspect the equipment and shipping container(s) for any signs of damage or mishandling.
3. As the equipment is unpacked, visually examine the system for transit damage.
4. Do not attempt to install the system if damage is apparent.
5. If any damage is noted, follow local practices for reporting and handling damaged goods.

4.3 Installing the Rack Mounting Rail Kit into an IT Rack

Install rack mounting rail kit into a 21-inch frame of a version 3 HPR OCP (Open Compute Project) IT rack as follows. Refer to Figure 4.1, Figure 4.2, and Figure 4.3 as this procedure is performed.

Procedure

1. Find the related OpenU marking number of the desired location on the rack.
2. Install one side of the mounting rail kit by orienting the rail as shown in Figure 4.2.
3. Align the two tabs of the mounting rail to the corresponding cutout in the IT rack frame according to the desired OpenU number.
4. Slide the mounting rail in until the mounting rail tabs fit into the corresponding cutouts in the rack. Pull the mounting rail latching clip towards the center of the rack while sliding the mounting rail into position. Release the mounting rail latching clip to secure the rail to the rack. See Figure 4.3.

5. Repeat the procedure for the other side mounting rail.

Figure 4.1 Mounting Rails

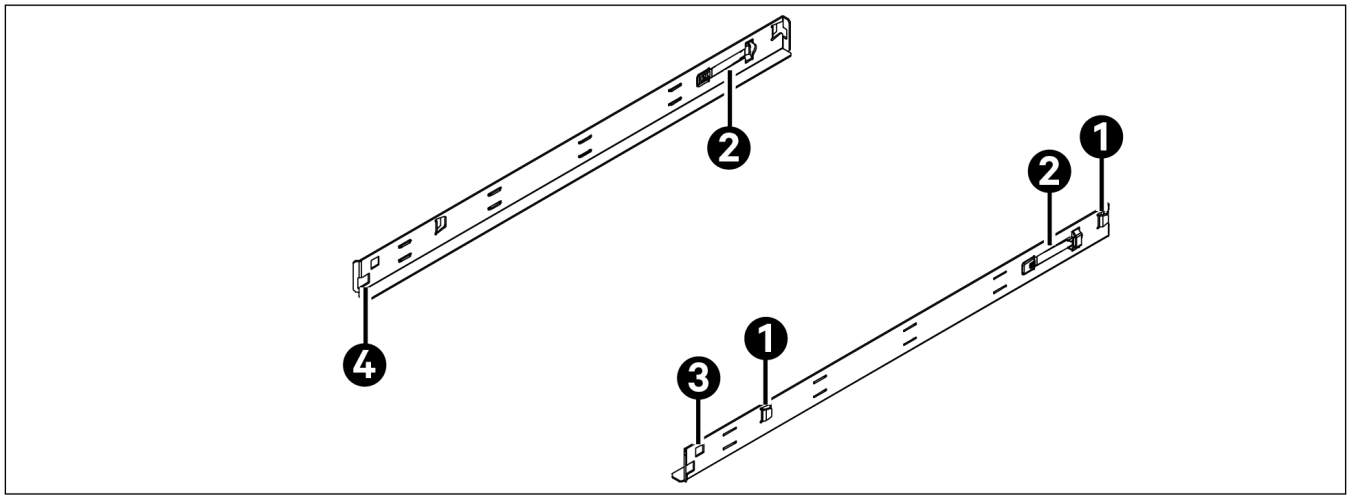

Item	Description
1	Mounting Rail Tab
2	Mounting Rail Latching Clip
3	Cutout for Vertical Retention Clip
4	Cutout for Shelf Latch

Figure 4.2 Installing Mounting Rail Kit

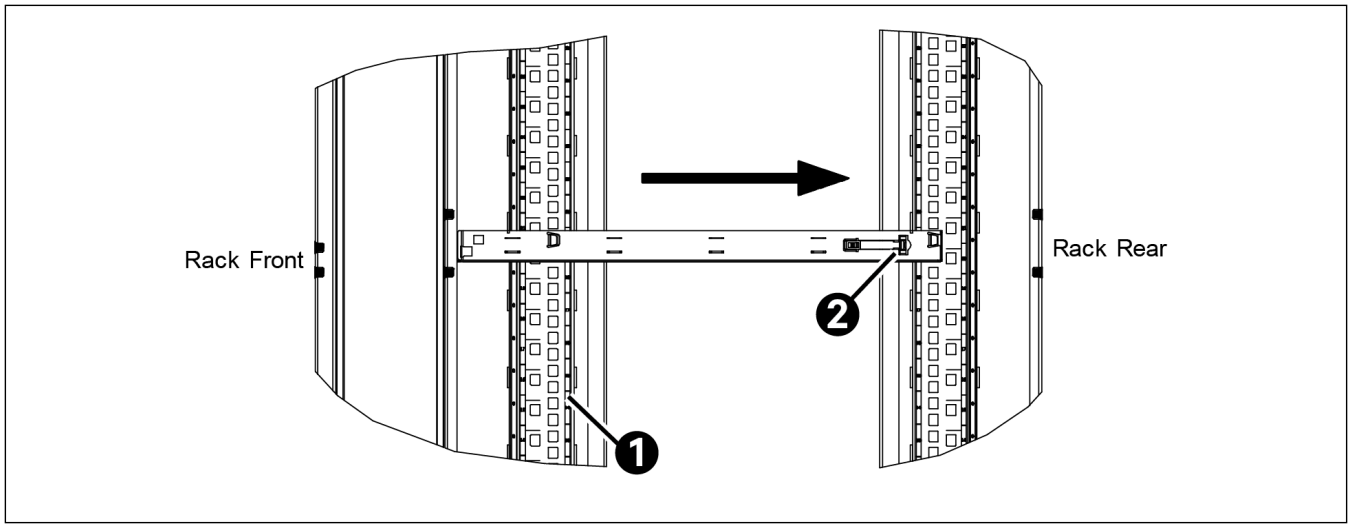

Item	Description
1	OpenU Marking Number
2	Raise Mounting Rail Clip and Push in Mounting Rail

Figure 4.3 Mounting Rails Installed View

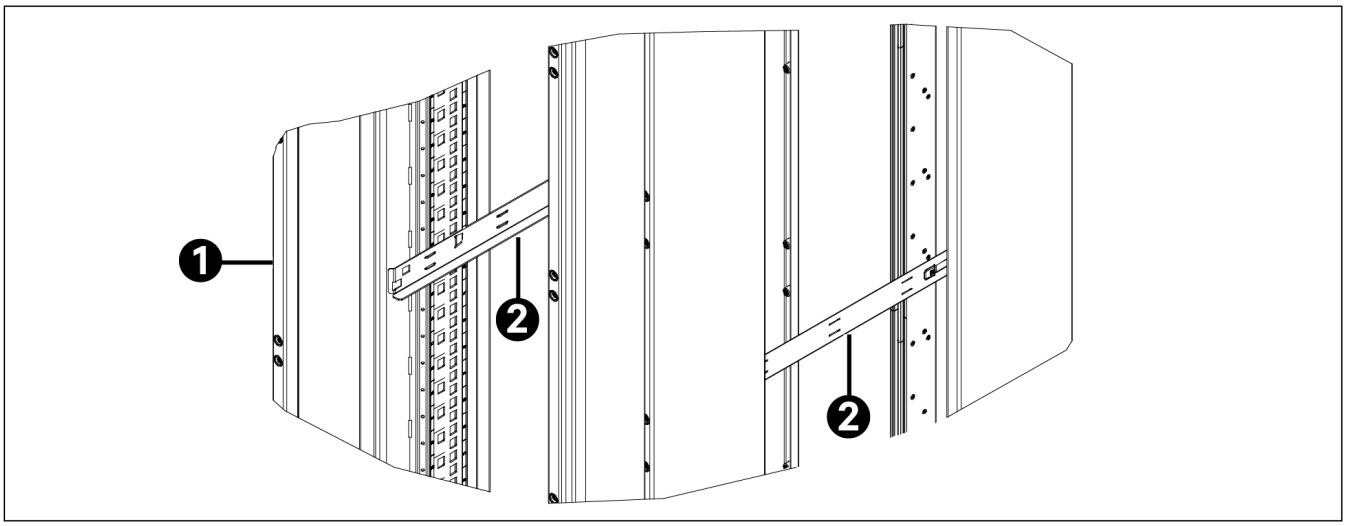

Item	Description
1	Rack
2	Mounting Rails

4.4 Installing the DC Shelf(s) into an IT Rack

Install the DC shelf(s) into a 21-inch mounting frame of a Orv3 HPR Rack as follows.

Procedure

1. Partially slide the DC shelf into the front of the rack, resting the bottom of the DC shelf on the rack mounting rails.
2. Slide the mounting levers located on each side of the DC shelf in towards the center of the shelf. Slide the DC shelf completely into the rack. Release the mounting levers to secure the DC shelf to the rack.
3. Verify that the shelf's DC output connector mates properly with the vertical DC busbar set in the rear of the rack.

5 Making Electrical Connections

5.1 Important Safety Instructions

DANGER! Adhere to the “Important Safety Instructions” starting on page vi.

- The maximum investigated branch circuit rating is: 40A (3W+N+PE), 125A (2W+PE).
- The DC shelf is built in.

5.2 Wiring Considerations

All wiring and branch circuit protection should follow the current edition of the American National Standards Institute (ANSI) approved National Fire Protection Association's (NFPA) National Electrical Code (NEC), and applicable local codes. For operation in countries where the NEC is not recognized, follow applicable codes.

For wire size, branch circuit protection and general wiring recommendations; refer to System Application Guide SAG1PSS5033.

5.3 Power System Frame Grounding Connection

For system frame grounding requirements, refer to the current edition of the American National Standards Institute (ANSI) approved National Fire Protection Association's (NFPA) National Electrical Code (NEC), applicable local codes, and your specific site requirements. For operation in countries where the NEC is not recognized, follow applicable codes.

A customer's frame grounding network lead is factory connected to the M5 frame ground screw located at the rear of each DC shelf. See Figure 5.1. Connect the end of this cable to a suitable ground.

Figure 5.1 Power System Frame Grounding Connection

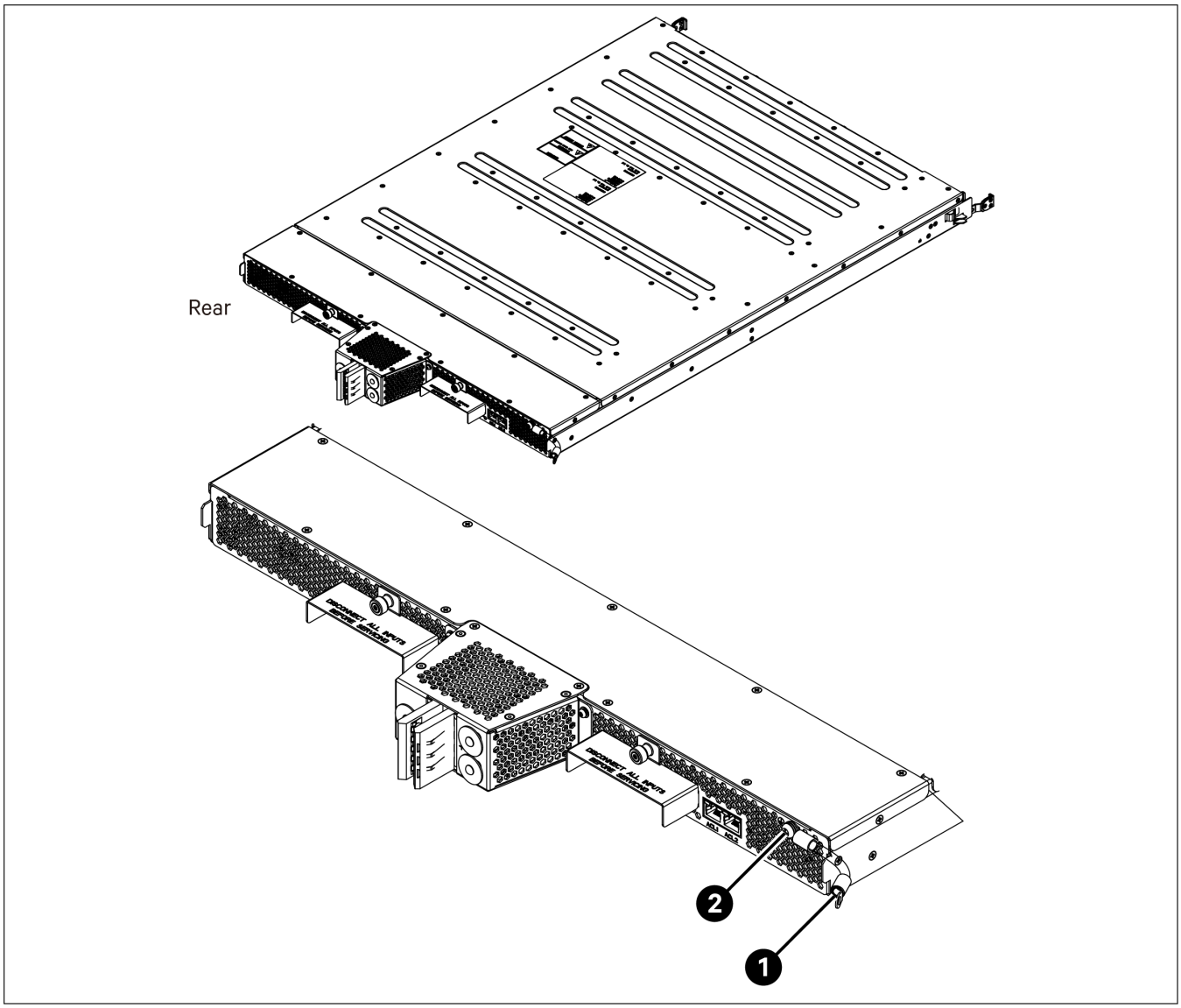

Item	Description
1	A customer's frame grounding network lead is factory connected to the M5 ground screw. The ground wire diameter is 8 AWG (6 mm^2).
2	⏚ Shelf Frame Grounding Connection M5 Screw. Torque: 2 Nm (17.7 in-lbs.)

5.4 50 VDC Output Connection

Important Safety Instructions

DANGER! Adhere to the “Important Safety Instructions” starting on page vi.

WARNING! Observe proper polarity when making output connections.

General

DC output is provided via a DC output connector located on the back of the DC shelf as shown in Figure 5.2. This connector is compatible to mate with the vertical DC busbar set in an Open Compute Project version 3 HPR rack.

Figure 5.2 50 VDC Output Connections

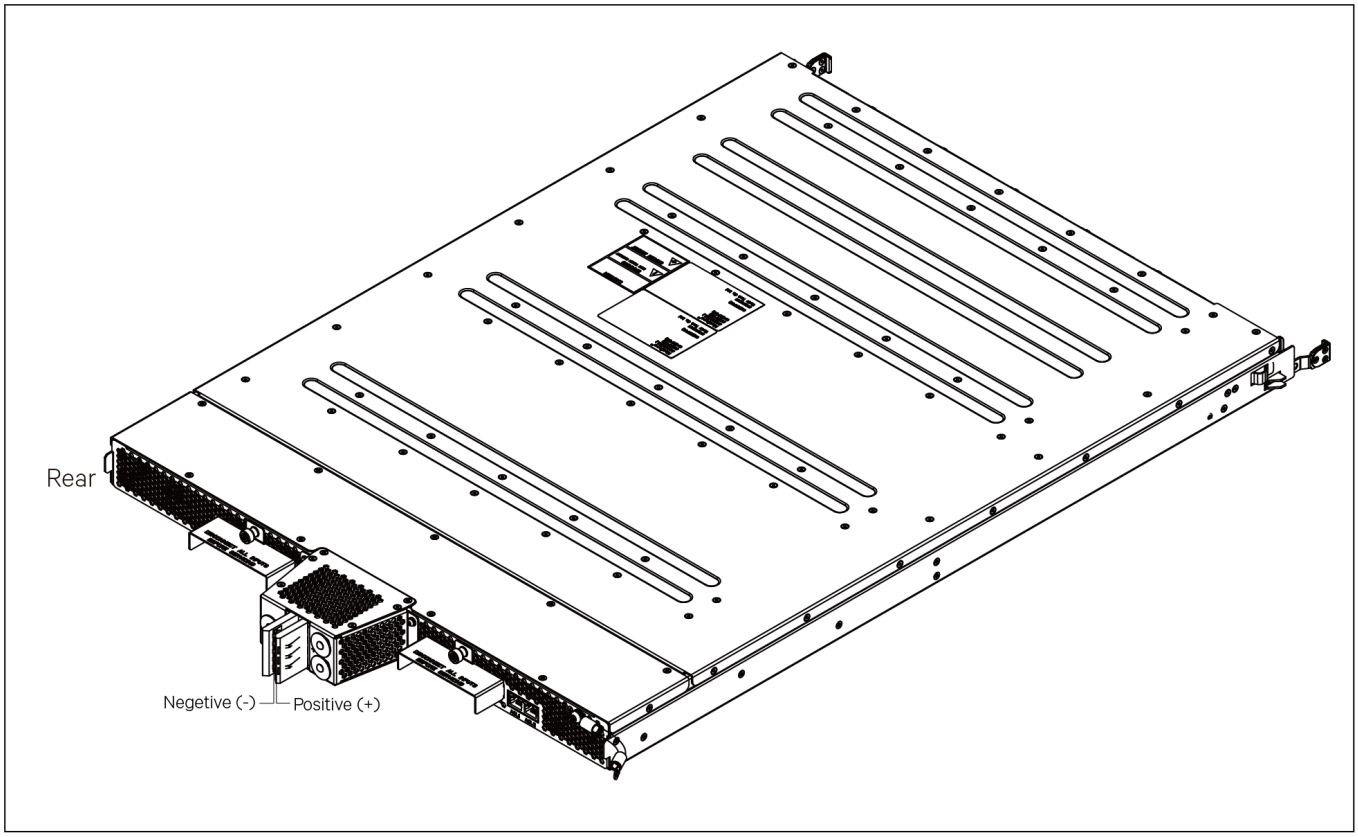

5.5 AC_Loss Interface Connection

AC_Loss Interface is used for PSU-BBU transition. It connects from Power Shelf to BBU Shelf.

5.5.1 AC_Loss Signal

AC_Loss signals are provided with the 5.5kW PSU (Power Supply Unit) and BBU (Battery Backup Unit) and shelves to enable control during AC loss events. Each PSU has an output AC_Loss signal, while each BBU has two input AC_Loss signals. Upon detection of AC loss, the PSUs will assert the AC_Loss signal after a validation delay of 4-5ms.

When a BBU receives either one of the active AC_Loss signals, it will pull the Sync_Start_L signal low, allowing the BBU shelf to initiate immediate discharge. The output voltage of the BBU shelf shall ramp up to the normal setting range within 5ms.

Figure 5.3 AC_Loss &Pulse Management Signals

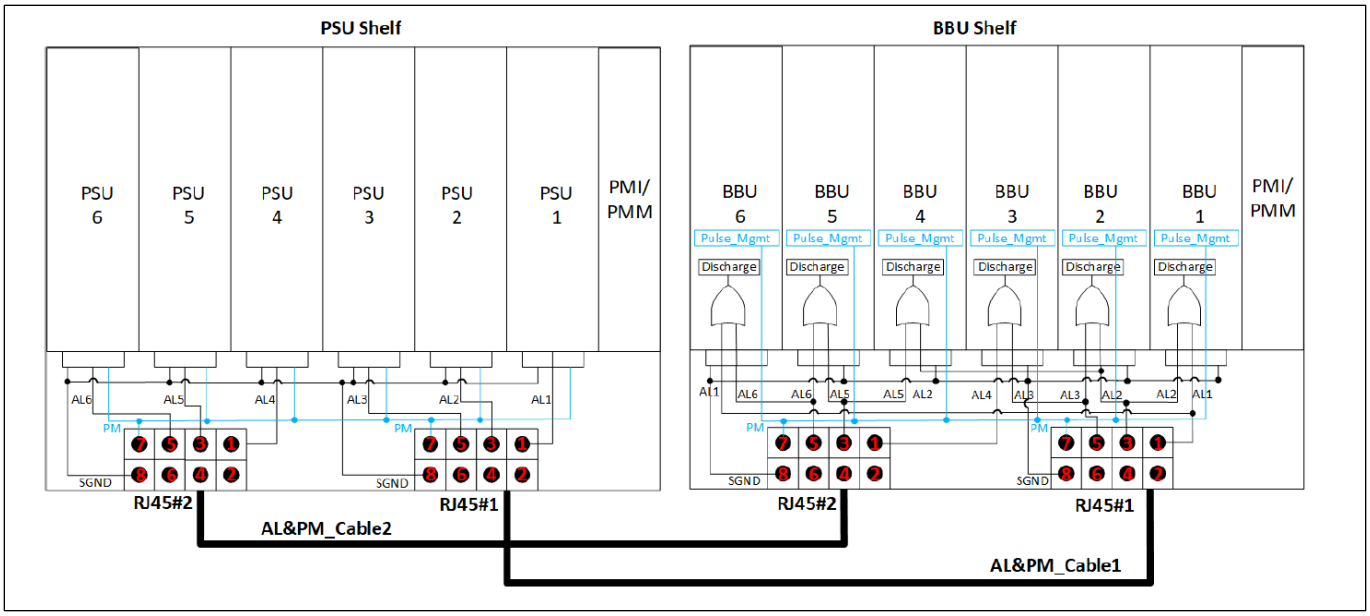

5.6 Parallel Shelves Connection

50 VDC @ up to 132 kW (up to eight shelves can be configured in a single system), the capacity of single shelf is 33 kW / 50 VDC. The following diagram shows three power shelves (the maximum shelf number is 8) and three BBU shelves connected in parallel.

Figure 5.4 Parallel Shelves Connection

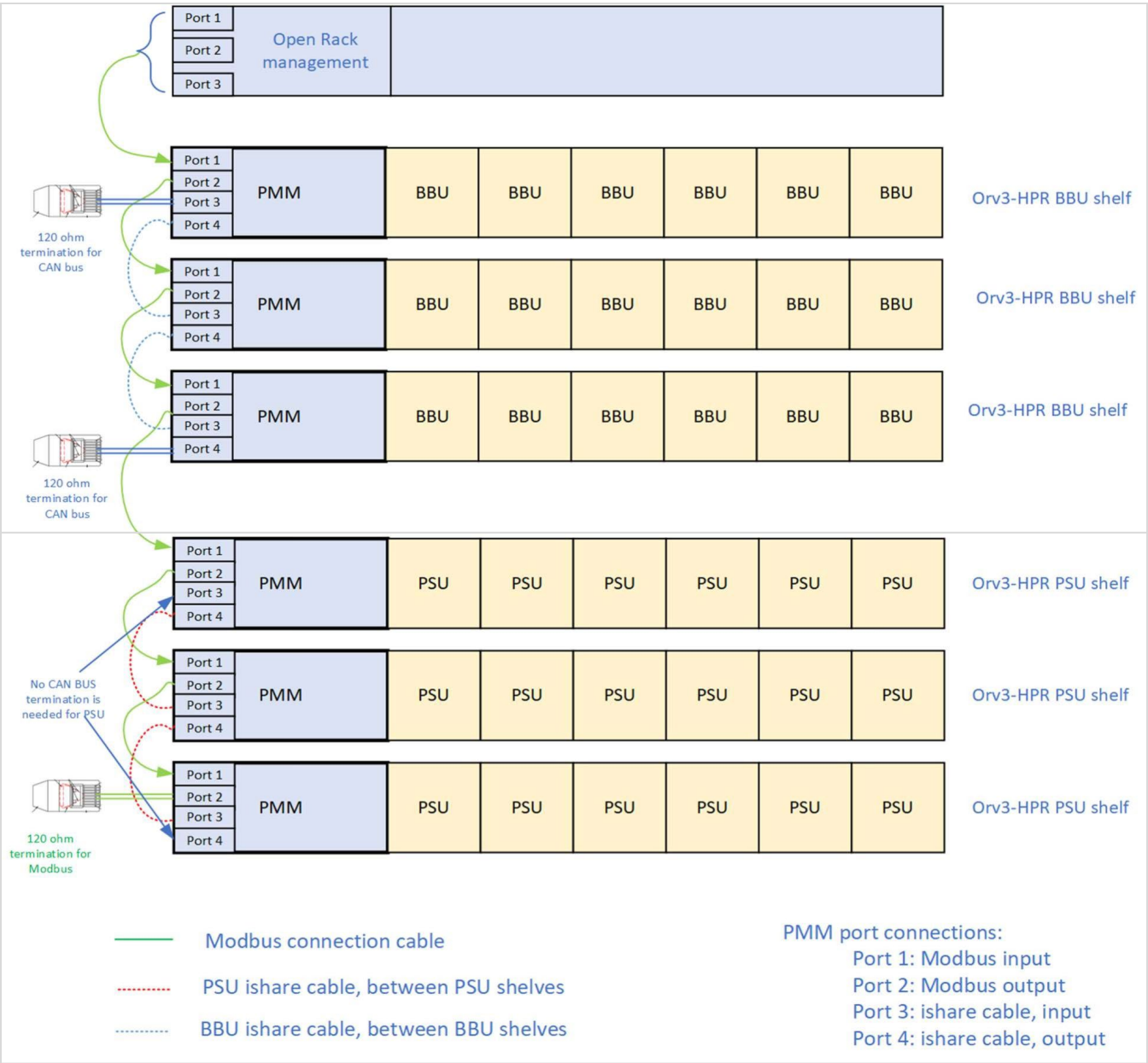

NOTE! *When using a single shelf, still need to configure Daisy Chain Jumper.*

NOTE! *There are two kinds of network cable (P/N 0411B749 and P/N 0411C205), the default configuration is to use short network cable (P/N 0411B749) for parallel operation. When the distance between two shelves in the rack exceeds 250 mm (9.84 inches), order long network cable (P/N 0411C205).*

5.7 AC Input and AC Input Equipment Grounding Connections

Important Safety Instructions

DANGER! Adhere to the “Important Safety Instructions” starting on page vi.

General

The DC shelf is designed to accept two separate AC power feeds. Each AC feed connects to three individual Power Supply Unit modules. There are a total of six Power Supply Units for the entire system. See Figure 5.5.

Figure 5.5 AC Input in the Shelf

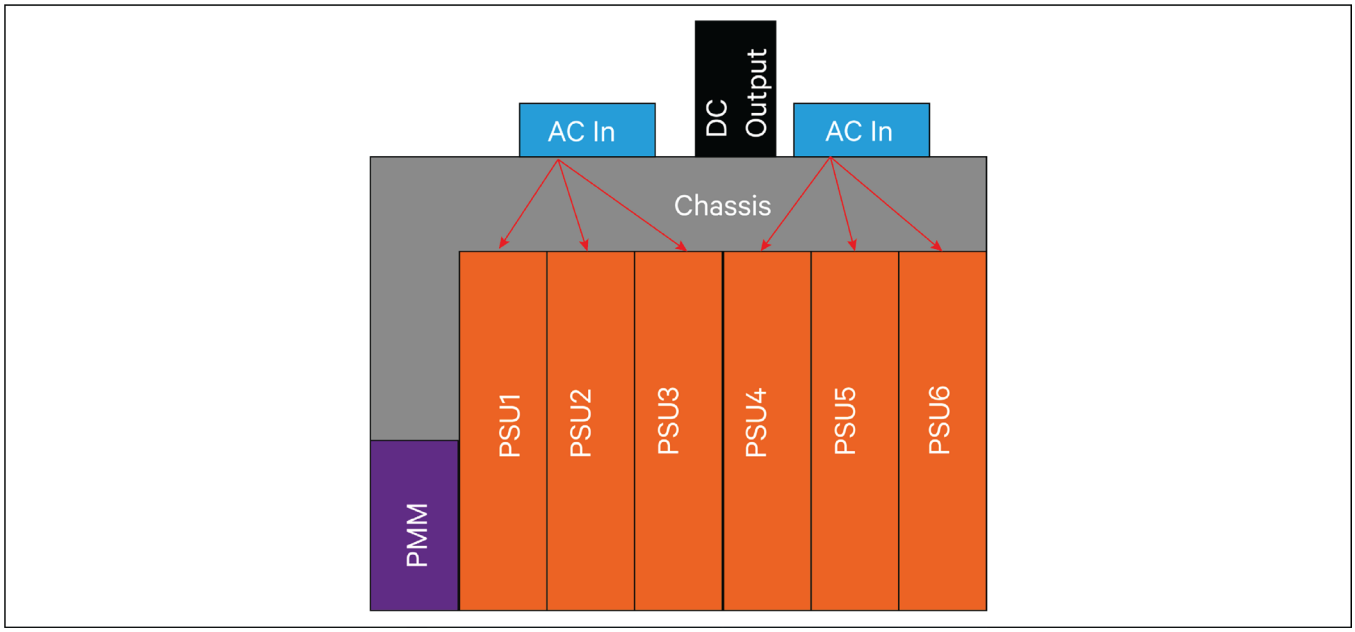

AC input is connected to the “AC Input 1” and “AC input 2” connectors. Various AC input cable options are available which provide an AC cord and mating connector. See Figure 5.6.

5.7.1 AC Input Cable Assembly (NEMA AC Input)

Figure 5.6 AC Input Cable Assembly with L22-30P plug

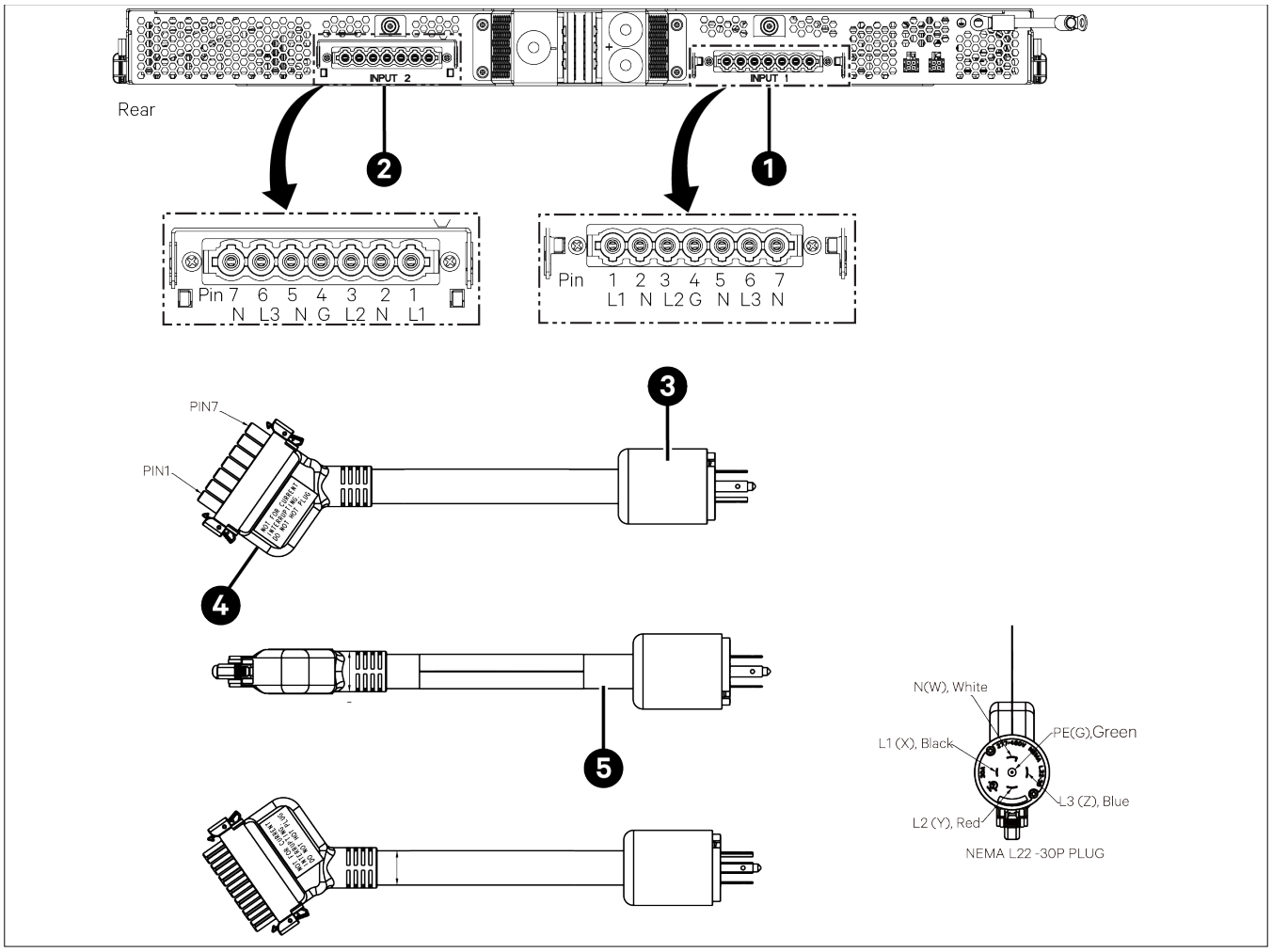

Item	Description	Item	Description
1	AC Input #1	4	7 Pin Female Connector
2	AC Input #2	5	TYPE W 5X 10 AWG Cable
3	NEMA L22-30P 30 A Plug	--	--

Refer to Table 5.1 for recommended AC input branch circuit protection.

Table 5.1 Recommended AC Input Branch Circuit Protection (Nominal 415 VAC / 240 VAC, Three Phase, 50 Hz / 60 Hz)

Input Voltage	Nominal Input Current	Overcurrent Protection [1]
415 VAC / 240 VAC	23.8 A	Size per AC Line Cord Plug Rating

[1]The AC input branch circuit protective device should be of the time delay or high inrush type.

5.7.2 AC Input Cable Assembly with 60309 Plug

See Figure 5.7 and Table 5.2.

Figure 5.7 AC Input Cable Assembly (wye/star connection)

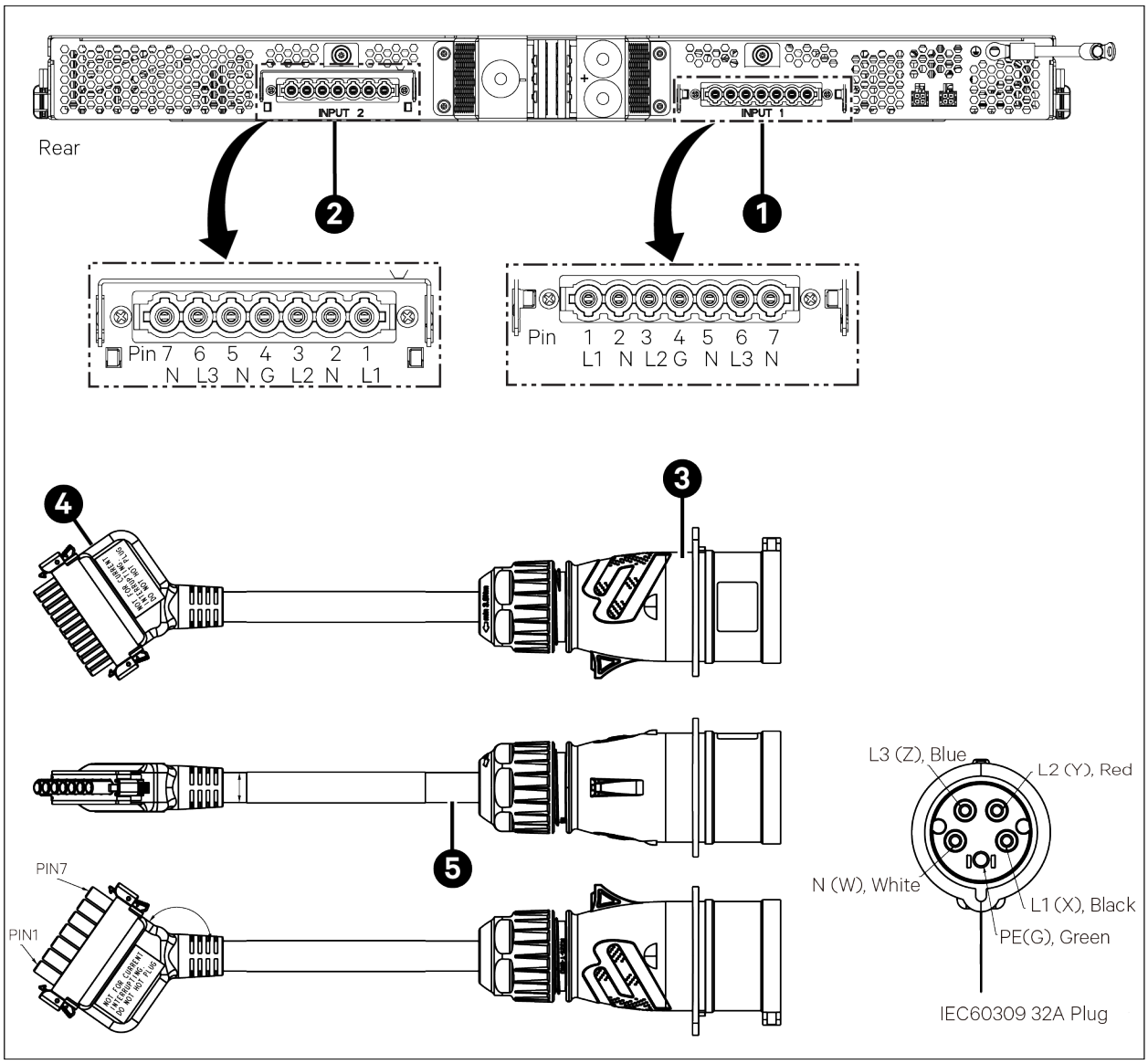

Item	Description	Item	Description
1	AC Input #1	4	7 Pin Female Connector
2	AC Input #2	5	TYPE W 5X 10 AWG Cable
3	IEC, 530P6, 32 A Plug	--	--

Refer to Table 5.2 for recommended AC input branch circuit protection.

Table 5.2 Recommended AC Input Branch Circuit Protection (Nominal 400 VAC / 230 VAC or 415 VAC / 240 VAC, Three Phase, 50 Hz / 60 Hz) AC Input Cable Assembly

Input Voltage	Nominal Input Current	Overcurrent Protection [1]
400 VAC / 230 VAC	24.9 A	Size per AC Line Cord Plug Rating
415 VAC / 240 VAC	23.8 A	Size per AC Line Cord Plug Rating

[1]The AC input branch circuit protective device should be of the time-delay or high inrush type.

5.8 Controller Front Panel RJ45 Connectors

General

In the front of the PMM, there is a single 4x RJ45 connector. This is a modular jack connector in a 2x2 configuration of RJ45s with two LEDs. Looking from the front, top left RJ45 is #1, top right is #2, bottom left is #3, bottom right is #4. RJ45 #1&2:

RJ45 Port #1 and Port #2 include electrical connections for Modbus communications, address pins, and alarm signals. The dual-port design allows for daisy-chain Modbus connections with multiple PSU shelves, BBU shelves, and RPUs on the same daisy chain.

RJ45 #3 and #4 include signals for internal rack control. Connections between different types of racks are not allowed. Pin 6 on #3 and #4 is used to monitor if the daisy chain cable is installed or missing.

Communication with rack monitor via Modbus. RJ45 #3&4: Intended for inter shelf control and multiple shelf parallel operation.

Figure 5.8: RJ45 Connectors

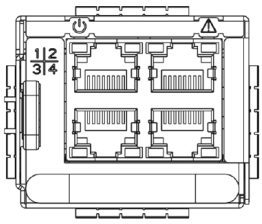

Table 5.3 RJ-45 Pin Configuration

RJ45 #1			RJ45 #2		
Pin	Wire Color	Function	Pin	Wire Color	Function
1	White/Orange	GND	1	White/Orange	GND
2	Orange	PLS	2	Orange	PLS
3	White/Green	CLS	3	White/Green	CLS
4	Blue	RS485A	4	Blue	RS485A
5	White/Blue	RS485B	5	White/Blue	RS485B
6	Green	RS485_Addr2	6	Green	RS485_Addr2
7	White/Brown	RS485_Addr1	7	White/Brown	RS485_Addr1
8	Brown	RS485_Addr0	8	Brown	RS485_Addr0
RJ45 #3			**RJ45 #4**		
Pin	Wire Color	Function	Pin	Wire Color	Function
1	White/Orange	ISHARE	1	White/Orange	ISHARE
2	Orange	GND	2	Orange	GND
3	White/Green	SYNC_START_L	3	White/Green	SYNC_START_L
4	Blue	CAN_H	4	Blue	CAN_H_OUT
5	White/Blue	CAN_L	5	White/Blue	CAN_L_OUT
6	Green	SYNC_STOP_L	6	Green	SYNC_STOP_L
7	White/Brown	SOH_L	7	White/Brown	SOH_L
8	Brown	Missing Daisy Chain Cable	8	Brown	GND

5.9 Controller Indicator Light

There are two LED indicator lights. Refer to Table 5.4 for details.

Table 5.4 LED Indicator Definition

States	Blue LED	Amber LED	Meaning
1	Off	Off	No power to PMM or PMM Power Failure
2	Solid on	Off	PMM operation normal
3	Solid on	x	PMM ready (not including wiring checking)
4	Blinking	x	PMM FW upgrade
5	Blinking or solid on	Blink (0.25s/0.25s)	ISHARE cable not detected (Not apply to the first shelf) (priority 3, see note)
6	Solid on	Blink (0.5s/0.5s)	No valid PMM Modbus address. (Serial link doesn't receive valid data and A2=0) (priority 2)
7	Solid on	Solid on	PMM in unknow shelf type (priority 1)
8	Off	Solid on	PMM permanent failure (but power is ok to drive the LED) (priority 0, highest) ** (phase in before PVT)

NOTE! *When there are two or more failures happening at the same time, use the LED to indicate the failure with the highest priority. Priority 0 represents the highest priority.*

5.10 Controller Power Input/Output

Power Input:

Voltage: 36 VDC to 60 VDC

Current: <0.5A

Power Output:

Voltage: 3 VDC to 3.6 VDC

Current: <0.1A

6 Installing the PSUs and PMM

6.1 Installing PSUs

CAUTION! The PSU contains double pole fusing; parts of the equipment that remain energized might represent a hazard during servicing after operation of the fuse.

The PSU is hot swappable. It can be removed and installed with the system operating and without affecting the output bus.

Procedure

NOTE! *Refer to Figure 6.1 as this procedure is performed.*

1. Unpack the PSU.
2. Partially slide the PSU into the shelf.
3. Push the spring latch handle located on the front of the PSU to the right (this will retract the securing latch located on the side of the PSU).
4. Slide the PSU completely into the shelf and release the spring latch handle (the securing latch located on the side of the PSU will pop into a notch in the shelf to secure the PSU to the shelf).
5. After the PSUs are physically installed in the mounting shelf(s), they are ready for operation immediately after power is supplied to them.
6. If the system is operating, ensure that there are no local or remote alarms active on the system.

Figure 6.1 Installing PSU

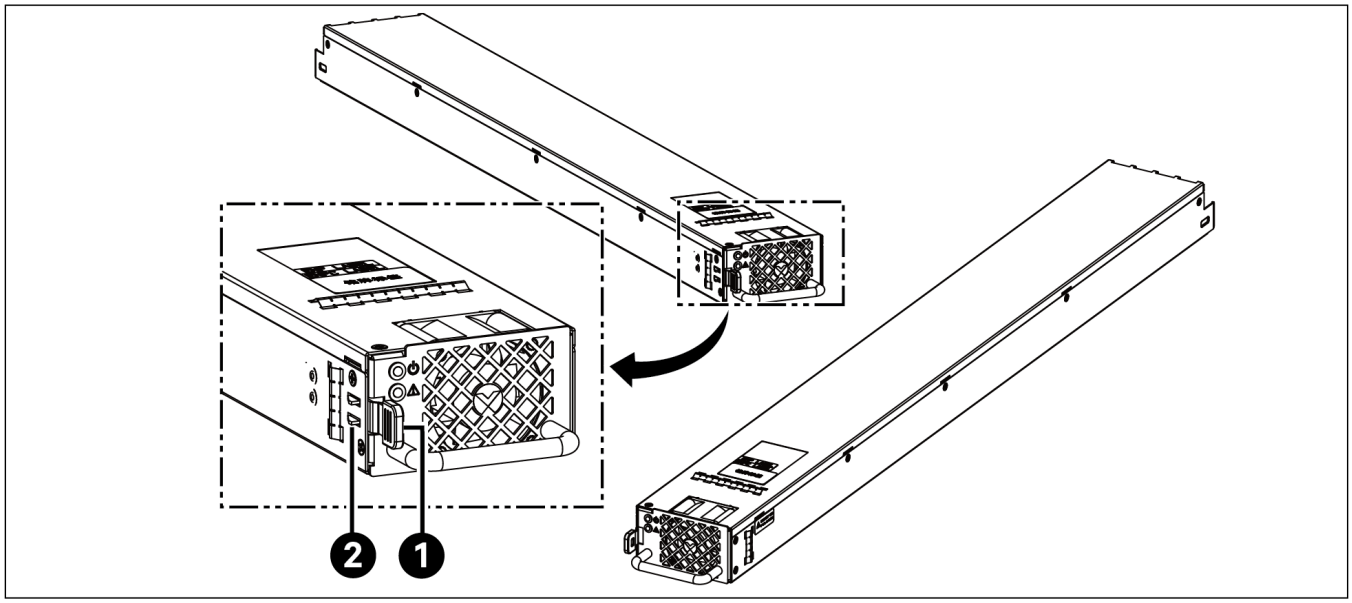

Item	Description
1	Spring Latch Handle
2	Securing Latch

6.2 Installing the PMM

The PMM is hot swappable. It can be removed and installed with the system operating and without affecting the output bus.

Procedure

1. Unpack the PMM.
2. Partially slide the PMM into the shelf.
3. Push the spring latch handle located on the front of the PMM to the right (this will retract the securing latch located on the side of the PMM).
4. Slide the PMM completely into the shelf and release the spring latch handle (the securing latch located on the side of the PMM will pop into a notch in the shelf to secure the PMM to the shelf).
5. If the system is operating, wait for the PMM to finish booting and verify that the system operates normally.
6. If the system is operating, ensure that there are no local or remote alarms active on the system.

Figure 6.2 Installing the Controller (PMM)

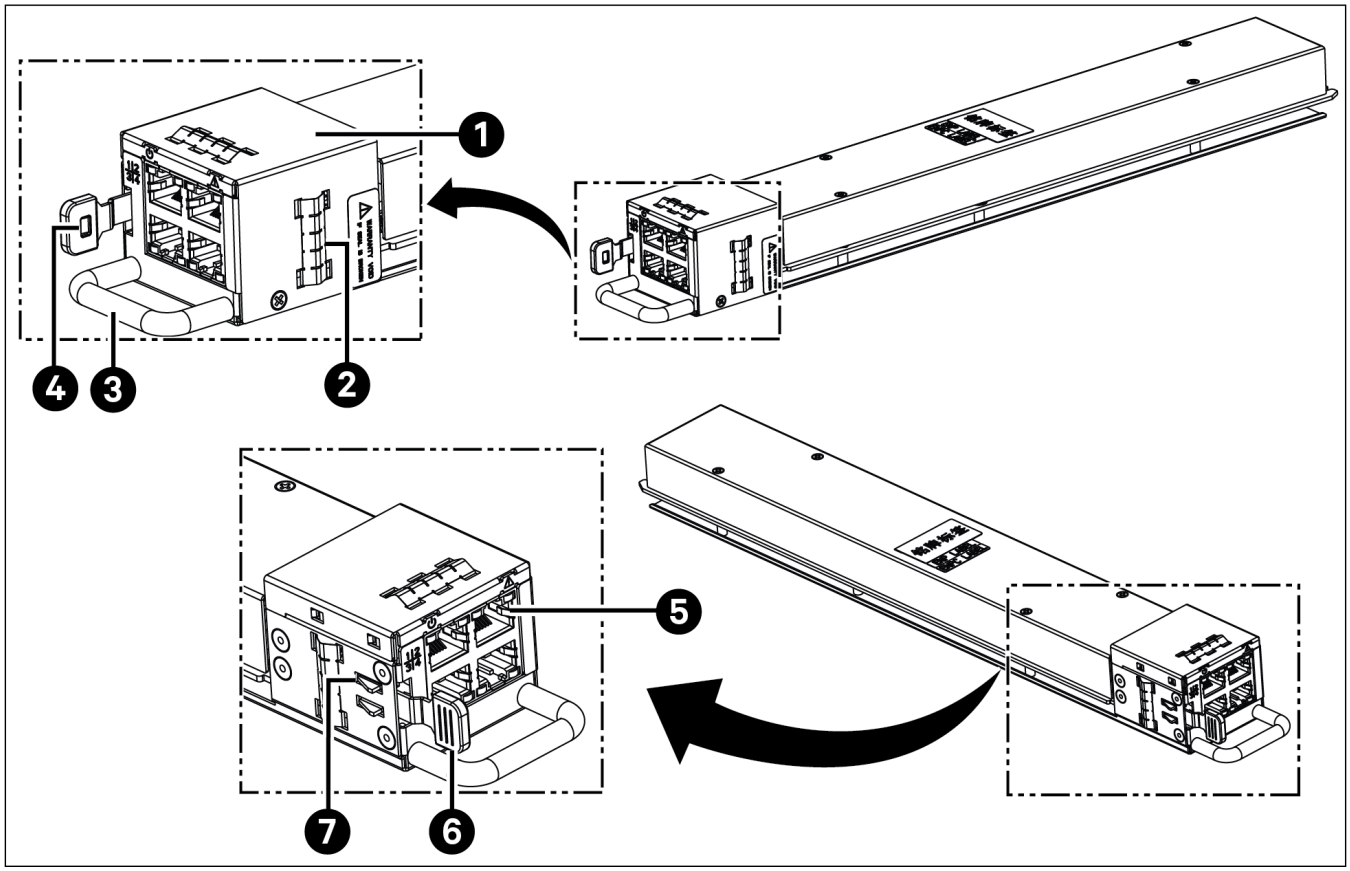

Item	Description	Item	Description
1	Shell	5	RJ45 Connector
2	EMI Gaskets	6	Spring Latch Handle
3	Handle	7	Securing Latch
4	Latch	--	--

7 Initially Starting, Configuring, and Checking System Operation

7.1 Important Safety Instructions

CAUTION! Performing various steps in the following procedures may cause a service interruption and/or result in the extension of alarms. Notify any appropriate personnel before starting these procedures. Also, notify personnel when these procedures are completed.

7.2 Initial Startup Preparation

- Ensure that all blocks, except the last one, in the “Installation Acceptance Checklist” starting on page 2 have been checked.
- Ensure that PSU mounting positions are filled by a PSU or a blank panel as required.
- Ensure that PMM mounting positions are filled by a PMM or a blank panel as required.
- Verify all PSUs and the PMM are fully seated and secured to the DC shelf.
- Refer to the separate PMM User Manual for complete controller operating information.

7.3 Initially Starting the System

NOTE! *After power is initially applied to the system it takes several seconds for the PSUs to begin producing power and the PMM initialization routine takes several minutes.*

Procedure

1. Apply AC and/or DC input power to the DC shelf by closing ALL external AC disconnects or protective devices that supply input power to the DC shelf.
2. PSUs start.
3. Refer to the separate PMM User Manual (UM1PMM1S0) and set the PMM as required for your application.
4. Observe the status of the indicators located on the PSUs (see Figure 7.1). If the system is operating normally, the status of these is as shown in Table 7.1.
5. Verify there are no external alarms.

Figure 7.1 PSUs Indicators

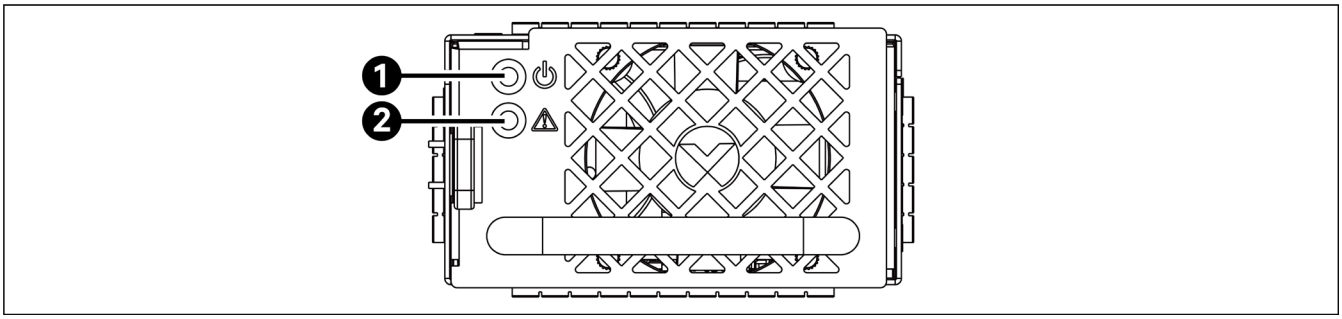

Item	Description
1	Power Indicator (Blue)
2	Protection Indicator (Amber)

Table 7.1 PSU Status and Alarm Indicators

Component	Indicator		Normal State
PSUs	Power Indicator	Blue	On
	Protection Indicator	Amber	Off

Figure 7.2 PMM Indicator

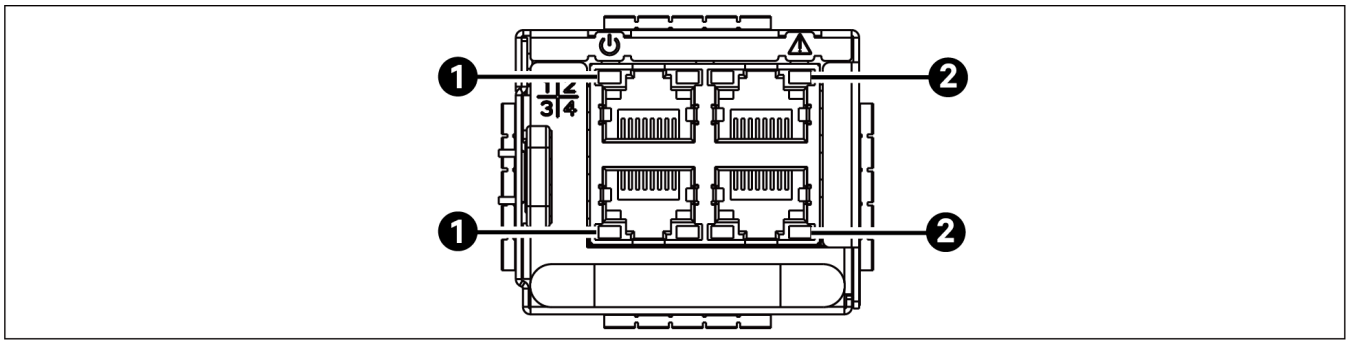

Item	Description
1	Blue LED
2	Amber LED

For the LED indicator definition, refer to Table 5.4.

NOTE! *When there are two or more failures happening at the same time, use the LED to indicate the failure with the highest priority. Priority 0 represents the highest priority.*

Final Steps

Procedure

If any controller configuration settings were changed, refer to the separate Controller User Manual (UM1PMM1S0) and save a copy of the configuration file. This file can be used to restore the controller settings, if required, at a later date.

NOTE! *Provided on a USB drive furnished with the system is a controller configuration drawing (C-drawing) and the controller configuration files loaded into the controller as shipped*

8 Operating Procedures

8.1 PMM and PSUs

General

For operation instructions on these units, refer to the following documents.

- PMM Instructions (UM1PMM1S0)
- Power Supply Unit Instructions (UM1R505500E4)

Local Indicators

Refer to the separate instruction manuals listed above.

9 Maintenance

9.1 System Maintenance Procedures

It is recommended to perform the maintenance procedures listed in Table 9.1 every 6-months to ensure continual system operation.

Table 9.1 Maintenance Procedures to be Performed at 6-Month Intervals

Procedure	Referenced In
Check ventilation openings for obstructions such as dust, papers, etc.	--
Inspect and tighten all installer's connections.	See "Making Electrical Connections" starting on page 6.

9.2 Adding a PSU (R505500E4) to a DC Shelf

To increase system current capacity, a PSU can easily be added to an existing DC shelf that contains an empty PSU mounting position. Refer to "Installing PSUs" on page 17.

10 Troubleshooting and Repair

10.1 Contact Information

Go to https://www.vertiv.com/support/ for local support information.

10.2 Controller and PSUs

For troubleshooting and repair instructions on these units, refer to the following documents.

- PMM Instructions (UM1PMM1S0)
- Power Supply Unit Instructions (UM1R505500E4)

10.3 System Troubleshooting Information

This system is designed for ease in troubleshooting and repair. The various indicators as described in the controller and PSU instructions are designed to isolate failure to a specific element. Once the faulty element has been identified, refer to "Replacement Information" on page 22 and "Replacement Procedures" on page 22.

10.4 Replacement Information

10.4.1 Replacement Assemblies

When a trouble symptom is localized to a faulty Power Supply Unit module or PMM; that particular device should be replaced in its entirety. No attempt should be made to troubleshoot or repair individual components on any Power Supply Unit module or PMM.

10.5 Replacement Procedures

10.5.1 Important Safety Instructions

DANGER! Adhere to the “Important Safety Instructions” starting on page vi.

10.5.2 Replacing a PMM

Refer to the separate PMM User Manual (UM1PMM1S0) for a replacement procedure.

10.5.3 Replacing a PSU

Refer to the Power Supply Unit Instructions (UM1R505500E4) for a replacement procedure. Refer also to “System Troubleshooting Information” on page 21.

The PSU being replaced is assigned by the PMM the lowest available identification number. If desired, you can change the identification number. Refer to the separate PMM User Manual (UM1PMM1S0) for a procedure.

Connect with Vertiv on Social Media

https://www.facebook.com/vertiv/

https://www.instagram.com/vertiv/

https://www.linkedin.com/company/vertiv/

https://www.x.com/vertiv/

Proprietary and Confidential © 2025 Vertiv Group Corp.

Vertiv.com | Vertiv Headquarters, 505 N Cleveland Ave, Westerville, OH 43082, USA

© 2025 Vertiv Group Corp. All rights reserved. Vertiv™ and the Vertiv logo are trademarks or registered trademarks of Vertiv Group Corp. All other names and logos referred to are trade names, trademarks or registered trademarks of their respective owners. While every precaution has been taken to ensure accuracy and completeness here, Vertiv Group Corp. assumes no responsibility, and disclaims all liability, for damages resulting from use of this information or for any errors or omissions.

UM1PSS5033 _REVB

Proprietary and Confidential © 2025 Vertiv Group Corp.