NetSure™ 7100 Energy 500A/750A/1000A DC Power System

Installation and User Manual

The information contained in this document is subject to change without notice and may not be suitable for all applications. While every precaution has been taken to ensure the accuracy and completeness of this document, Vertiv assumes no responsibility and disclaims all liability for damages resulting from use of this information or for any errors or omissions. Refer to other local practices or building codes as applicable for the correct methods, tools, and materials to be used in performing procedures not specifically described in this document.

The products covered by this instruction manual are manufactured and/or sold by Vertiv. This document is the property of Vertiv and contains confidential and proprietary information owned by Vertiv. Any copying, use, or disclosure of it without the written permission of Vertiv is strictly prohibited.

Names of companies and products are trademarks or registered trademarks of the respective companies. Any questions regarding the usage of trademark names should be directed to the original manufacturer.

Technical Support Site

If you encounter any installation or operational issues with your product, check the pertinent section of this manual to see if the issue can be resolved by following outlined procedures.

Visit https://www.vertiv.com/support/ for additional assistance.

For the latest technical documentation scan this QR code or visit:

https://www.vertiv.com/en-emea/products-catalog/critical-power/dc-power-systems/vertiv-netsure-7100-energy--48v-dc-energy-management-solutions/

TABLE OF CONTENTS

Admonishments Used in this Document ..... **vi**
Important Safety Instructions ..... **vii**
Safety Admonishments Definitions vii
General Safety vii
Voltages vii
Hazardous Voltage vii
DC Voltage (Solar) vii
DC Voltage (Independent DC Power Port) vii
AC Input Voltages viii
DC Output (Load and Battery) Voltage viii
Battery viii
Personal Protective Equipment (PPE) viii
Handling Equipment Containing Static Sensitive Components viii
Maintenance and Replacement Procedures viii
Static Warning ..... **ix**
1 General Information and Installation Acceptance Checklist **1**
1.1 Customer Documentation Package 1
1.2 System Description 1
1.2.1 19” Multi-Function Subrack 1
1.2.2 23” Multi-Function Subrack 2
1.2.3 Load Distribution 2
1.2.4 Rectifier 2
1.2.5 Solar Converter 2
1.2.6 Independent DC Power Port 2
1.2.7 -58 VDC 2
1.2.8 Vertiv™ NetSure™ 7100 Energy 500A 3
1.2.9 Vertiv™ NetSure™ 7100 Energy 750A 3
1.2.10 Vertiv™ NetSure™ 7100 Energy 1000A 3
1.2.11 NCU Controller 3
1.2.12 CAN Bus Extension 3
1.2.13 RS232, RS485, and Fuel Sensor Connector 3
1.2.14 IB2, IB4, EIB, and DC SPD Board 3
1.2.15 Load Disconnect, including the Optional Two or Three-Stage Priority 4
1.2.16 Solar Input with PV SPD 4
1.2.17 19” Subrack variants 5
1.2.18 23” Subrack Variants 7
1.3 23” Subrack with Solar Input Unit with PV SPD in NetSure™ Cabinet 10
1.4 Installation Acceptance Checklist 11
2 Physically Installing the Power System **12**
2.1 General Requirements 12
2.2 Vertiv indoor cabinets and Battery Racks 12
2.3 Mounting a NetSure™ Standalone Cabinet (if provided) 13
2.3.1 Installing Optional Foot Kit (if required) 13
2.3.2 Anchoring to the Floor 15
2.3.3 Anchoring to the Wall 16
2.4 Mounting a Standalone Subrack in a Customer-Provided Cabinet 17

© 2026 Vertiv Group Corp. All Rights Reserved.

2.5 Mounting a Standalone Subrack on a Battery Rack 19
2.5.1 Installing the Battery Rack 19
2.5.2 Installing the Subrack on the Battery Rack 19
2.6 Installing VRLA Batteries in a Battery Rack 20
2.7 Installing Load Distribution or Battery Disconnect Circuit Breakers 20
2.8 Mounting the optional Solar Input Shelf with PV SPD 21
2.8.1 Wiring of Solar Input Shelf with PV SPD 21
2.8.2 Mounting the Optional Back Covers for the Solar Input Shelf with PV SPD 22
3 Setting Switch Options 24
3.1 Circuit Board Locations 24
3.2 Switch Settings on Optional EIB and IB2 Interface Board 24
4 Making Electrical Connections 26
4.1 Important Safety Instructions 26
4.2 Wiring Considerations 26
4.3 Earthing Connections 26
4.4 Cable Routing Guidelines 28
4.4.1 Subrack in NetSure™ Cabinet 28
4.4.2 Standalone Subrack 28
4.5 DC Solar and AC Mains Connections 29
4.5.1 DC Solar Input 29
4.5.2 AC Input 30
4.6 Load / Battery Branches Current Limits 32
4.7 Wires Guidelines 32
4.8 Load Connections 33
4.9 Battery Connections 36
4.9.1 Important Safety Instructions 36
4.10 Independent DC Power Port Connections 36
4.11 External Alarm, Reference, Monitoring, and Control Connections 37
4.11.1 Connection Locations 37
4.11.2 Connections to the CAN Bus, RS485_1, RS485_2, and RS232 37
4.11.3 Connection of Fuel Level Sensors 38
4.11.4 Temperature Sensors Connections 38
4.11.5 Optional IB4 Interface Board Connections 39
4.11.6 Optional IB2 Interface Board Connections 39
4.11.7 Optional EIB Interface Board Connections 40
4.12 Ethernet Connection to the NCU (if required) 43
5 Initially Starting and Checking the System 44
6 Operating Procedures 44
6.1 Controllers, Rectifiers, and Converters 44
6.2 Independent DC Power Port 44
6.3 Local Controls and Indicators 44
6.4 Batteries 44
7 Maintenance 45
7.1 System Maintenance Procedures 45
7.2 Adding a Rectifier/Converter Module to the System 45
7.3 Adding a Load Distribution or Battery Disconnect Circuit Breaker 45
8 Troubleshooting and Repair 47

© 2026 Vertiv Group Corp. All Rights Reserved.

8.1 Controllers and Rectifiers 47
8.2 NCU Controller Configuration 47
8.3 System Troubleshooting Information 47
8.3.1 Troubleshooting Alarm Conditions on the NCU Controller 47
8.3.2 Checking the NCU Current Limit Point after Adding or Removing a Rectifier/Converter 47
8.3.3 Clearing a Rectifier/Converter Communications Fail Alarm after Removing a Rectifier/Converter 47
8.3.4 Clearing a Rectifier/Converter Lost Alarm 47
8.4 Replacement Information 48
8.4.1 Replacement Assemblies 48
8.5 Replacement Procedures 48
8.5.1 Rectifier Module Replacement 48
8.5.2 Solar Converter Module Replacement 48
8.5.3 NCU Controller Replacement 48
8.5.4 Load Distribution or Battery Disconnect Circuit Breakers Replacement 48
8.5.5 PV Input Circuit Breaker and PV SPD Replacement 50
8.5.6 Circuit Board Replacement Procedures 50
8.5.7 Load Circuit Breaker Alarm Board Replacement 51
8.5.8 Optional -48 V DC SPD Board Replacement 52
8.5.9 Optional IB2 and EIB Interface Boards Replacement 54
8.5.10 Optional IB4 Board Replacement 55

© 2026 Vertiv Group Corp. All Rights Reserved.

Admonishments Used in this Document

DANGER! Warns of a hazard the reader ***will*** be exposed to that will ***likely*** result in death or serious injury if not avoided. (ANSI, OSHA)

WARNING! Warns of a potential hazard the reader ***may*** be exposed to that ***could*** result in death or serious injury if not avoided. This admonition is not used for situations that pose a risk only to equipment, software, data, or service. (ANSI)

CAUTION! Warns of a potential hazard the reader ***may*** be exposed to that ***could*** result in minor or moderate injury if not avoided. (ANSI, OSHA) This admonition is not used for situations that pose a risk only to equipment, data, or service, even if such use appears to be permitted in some of the applicable standards. (OSHA)

ALERT! Alerts the reader to an action that ***must be avoided*** in order to protect equipment, software, data, or service. (ISO)

ALERT! Alerts the reader to an action that ***must be performed*** in order to prevent equipment damage, software corruption, data loss, or service interruption. (ISO)

FIRE SAFETY! Informs the reader of fire safety information, reminders, precautions, or policies, or of the locations of fire-fighting and fire-safety equipment. (ISO)

SAFETY! Informs the reader of general safety information, reminders, precautions, or policies not related to a particular source of hazard or to fire safety. (ISO, ANSI, OSHA)

© 2026 Vertiv Group Corp. All Rights Reserved.

Important Safety Instructions

Safety Admonishments Definitions

Definitions of the safety admonishments used in this document are listed under “Admonishments Used in this Document” on page vi.

General Safety

DANGER! YOU MUST FOLLOW APPROVED SAFETY PROCEDURES.

Performing the following procedures may expose you to hazards. These procedures should be performed by qualified technicians familiar with the hazards associated with this type of equipment. These hazards may include shock, hazardous energy, and/or burns. To avoid these hazards:

a) The tasks should be performed in the order indicated.

b) Remove watches, rings, and other metal objects.

c) Prior to contacting any uninsulated surface or termination, use a voltmeter to verify that no voltage or the expected voltage is present. Check for voltage with both AC and DC voltmeters prior to making contact.

NOTE! *Always verify that your voltmeter is in good condition by testing it against a recognized supply.*

d) Wear eye protection.

e) Use certified and well-maintained insulated tools. Use double-insulated tools appropriately rated for the work to be performed.

f) This equipment is not suitable for use in locations where children are likely to be present.

g) This product is intended only for installation in a Restricted Access Location.

h) Only authorized and properly trained personnel (Skilled person) should be allowed to install, inspect, operate, or maintain the equipment.

i) Do not work on LIVE parts. If required to work or operate live parts, obtain appropriate Energized Work Permits as required by the local authority or by other national building codes and local regulations.

Voltages

Hazardous Voltage

DANGER! HAZARD OF ELECTRICAL SHOCK.
More than one disconnect may be required to de-energize the system before servicing.

DC Voltage (Solar)

DANGER! System supplied by high DC-voltage (70 VDC to 420 VDC). Exercise extreme caution not to inadvertently contact or have any tool contact an input terminal or exposed wire connected to the terminal.

DC Voltage (Independent DC Power Port)

DANGER! Correct polarity must be observed when connecting the external supply to the DC input. A DC input of low voltage can present a risk of high short circuit current. Installing/servicing should be performed or supervised only by properly trained and qualified personnel knowledgeable about low-voltage DC precautions.

© 2026 Vertiv Group Corp. All Rights Reserved.

DANGER! Follow local lockout/tagout procedures to ensure DC branch circuit protection devices remain de-energized during installation at loads, as required.

AC Input Voltages

DANGER! This system operates from an AC input voltage capable of producing fatal electrical shock. AC input power must be completely disconnected from the branch circuits' wiring used to provide power to the system before any AC electrical connections are made. Follow local lockout/tagout procedures to ensure upstream branch circuit breakers remain de-energized during installation. DO NOT apply AC input power to the system until all electrical connections have been completed and checked.

DC Output (Load and Battery) Voltage

DANGER! This system produces DC power. Although the DC Output (Load & Battery) voltage is not hazardously high, the converters can deliver large amounts of current. Exercise extreme caution not to inadvertently contact or have any tool contact an output terminal or exposed wire-copper. NEVER allow a metal object, such as a tool, to contact more than one termination at a time, or to simultaneously contact a termination and a grounded object. Even a momentary short circuit can cause sparking, explosion, and injury.

DANGER! Follow local lockout/tagout procedures to ensure DC branch circuit protection devices remain de-energized during installation at loads, as required.

Battery

WARNING! Correct polarity must be observed when connecting battery leads.

WARNING! Special safety precautions are required for procedures involving handling, installing, and servicing batteries. Observe all battery safety precautions in this manual and in the battery instruction manual. These precautions should be followed implicitly at all times.

WARNING! A battery can present a risk of electrical shock and high short-circuit current. Servicing of batteries should be performed or supervised only by properly trained and qualified personnel knowledgeable about batteries and the required precautions.

Personal Protective Equipment (PPE)

DANGER! ARC FLASH AND SHOCK HAZARD.
Appropriate PPE and tools are required when working on this equipment. An appropriate flash protection boundary analysis should be done to determine the “hazard/risk” category, and to select proper PPE.

Handling Equipment Containing Static Sensitive Components

ALERT! Installation or removal of equipment containing static-sensitive components requires careful handling. Before handling any equipment containing static-sensitive components, read and follow the instructions contained on the Static Warning Page.

Maintenance and Replacement Procedures

CAUTION! When performing any step in procedures that require the removal or installation of hardware, use caution to ensure no hardware is dropped and left inside the unit; otherwise, service interruption or equipment damage may occur.

NOTE! *When performing any step in procedures that require the removal of existing hardware, retain all hardware for use in subsequent steps, unless otherwise directed.*

© 2026 Vertiv Group Corp. All Rights Reserved.

Static Warning

This equipment contains static-sensitive components. The warnings listed below must be observed to prevent damage to these components. Disregarding any of these warnings may result in personal injury or damage to the equipment.

1. Strictly adhere to the procedures provided in this document.
2. Before touching any equipment containing static-sensitive components, discharge all static electricity from yourself by wearing a wrist strap grounded through a one-megaohm resistor. Some wrist straps have a built-in one-megaohm resistor; no external resistor is necessary. Read and follow the wrist strap manufacturer's instructions outlining the use of a specific wrist strap.
3. Do not touch traces or components on equipment containing static-sensitive components. Handle equipment containing static-sensitive components only by the edges that do not have connector pads.
4. After removing equipment containing static-sensitive components, place the equipment only on conductive or anti-static material such as conductive foam, conductive plastic, or aluminum foil. Do not use ordinary Styrofoam™ or ordinary plastic.
5. Store and ship equipment containing static-sensitive components only in static shielding containers.
6. If necessary to repair equipment containing static-sensitive components, wear an appropriately grounded wrist strap, work on a conductive surface, use a grounded soldering iron, and use grounded test equipment.

© 2026 Vertiv Group Corp. All Rights Reserved.

This page intentionally left blank.

© 2026 Vertiv Group Corp. All Rights Reserved.

1 General Information and Installation Acceptance Checklist

1.1 Customer Documentation Package

This document (10185212-01-UM) provides Installation and User Instructions for the NetSure™ 7100 Energy 500A/750A/1000A DC Power System.

The complete Customer Documentation Package consists of:

- Safety Rules: 10183324
- NetSure™ 7100 Energy DC Power System Installation and User Instructions: 10185212-01-UM
- NCU (NetSure™ Control Unit) User Instructions: 11KO7503JL
- Table of Set Values, NetSure™ Power System with NCU: 11QF2335LA
- R48-4300E3 Rectifier User Instructions: 1R484300E3UM
- S48-4300E4 Solar Converter User Instructions: 1S484300E4-User Manual
- Installation Test Instructions: 10183329
- Circuit Diagram: BMK22302-01-CD

1.2 System Description

The NetSure™ 7100 Energy DC Power System is a fully integrated and flexible energy management system supporting rectifiers and solar converters, providing intelligent control, metering, monitoring, and distribution. A fundamental principle is that all energy sources are always connected and available to recharge the battery; as such, there is no battery disconnect, and the controller is always on. With the exception of the NCU, discharging the battery is effectively halted by opening all load disconnects.

Energy (hybrid) solutions are often deployed where managing energy is important, including:

- On-Grid, where solar can be used to reduce the cost of operation.
- Bad Grid, where solar can be used to maintain the load and battery when power is out during the day.
- Off-Grid, cycling batteries with generators, often referred to as CDC (Charge Discharge Charge).
- Off-Grid, CDC with Solar, where solar is used to minimize the demand on the generator.
- Off-Grid, Solar only, where the load and battery are maintained using the energy from the sun.

With the Independent DC Port, the solution can also support other well-behaved DC sources, such as DC Generators, Hydrogen Fuel Cells, and Wind Turbines.

The power system consists of the following components:

1.2.1 19” Multi-Function Subrack

The system includes a 19” multi-function subrack as follows:

- **Multifunction Unit:** The multifunction unit (MFU) houses the battery and the load distribution portion of the power system, as well as the control and monitoring through the NCU controller. Optional parts include IB2, IB4, EIB, DC SPD boards, and circuit breakers for the Independent DC Port.
- **Extended Distribution Unit:** The Extended Distribution Unit is an available option that can house additional distribution breakers.

© 2026 Vertiv Group Corp. All Rights Reserved.

- **Module Mounting Shelves:** Used to plug in rectifiers and converters. Based on system type and desired expansion capacity, the system can include up to four (4) shelves. See Table 1.1. The rectifier/solar converter module mounting shelf houses up to five (5) rectifiers/solar converters per shelf, in any combination (based on the type of AC/DC connection).
- **Optional Solar Protection Shelf:** A 3U for five (5) S48-4300E4 is available to provide input protection, incoming circuit breaker, and SPD (default EN50539-11 PV Class II, Type 2/c). For more information, refer to Solar Input with PV SPD.

1.2.2 23” Multi-Function Subrack

The system includes a 23” multi-function subrack as follows:

- **Multifunction Unit:** The multifunction unit (MFU) houses the battery and the load distribution portion of the power system, as well as the control and monitoring through the NCU controller. Optional parts include IB2, IB4, EIB, DC SPD boards, and circuit breakers for the Independent DC Port.
- **Extended Distribution Unit:** The Extended Distribution Unit is an available option that can house additional distribution breakers.
- **Module Mounting Shelves:** Used to plug in rectifiers and converters. Based on system type and desired expansion, the system can include up to four (4) shelves. See Table 1.2.. The rectifier/solar converter module mounting shelf houses up to six (6) rectifiers/solar converters per shelf, in any combination (based on the type of AC/DC connection).
- **Optional Solar Protection Shelf:** A 3U for six (6) S48-4300E4 is available to provide input protection, incoming circuit breaker, and SPD (default EN50539-11 PV Class II, Type 2/c). For more information, refer to Solar Input with PV SPD.

The system supports 1 to 6 Protective battery branch circuits. For monitoring and control support, a 500 A shunt is included in a 500 A system, and a 1000 A shunt is included in a 750/1000 A system.

Battery Breakers from 80 to 300 A are available, either as Thermal Magnetic or Hydraulic Magnetic for predictable operations at high temperature.

1.2.3 Load Distribution

The DC load distribution provides control and protection of branch circuits with optional surge protection, circuit breakers, and the ability to provide up to three (3) levels of load disconnects (LVD) in a 500 A/750 A system and up to two (2) levels of load disconnects in a 1000 A system. For more information on disconnects, please refer to 1.2.15The use of several load disconnects allows the ability to extend the operation of critical services while managing the best cost in energy storage (battery).

1.2.4 Rectifier

The system supports Vertiv’s 7100 -48 VDC rectifier modules, including but not limited to the R48-4300E3, enabling support for the load and battery, either from the grid and/or an AC generator. Refer to the Rectifier User Instructions (1R484300E3UM) for more information.

1.2.5 Solar Converter

The system supports Vertiv’s 7100 S48-4300E4 solar converter modules, which provide energy to the load and battery. Refer to the Solar Converter Instructions (1S484300E4-User Manual) for more information.

1.2.6 Independent DC Power Port

An optional independent DC Power Port, which includes a shunt for monitoring and management, can be configured into the system. This port is used to connect well-behaved DC power/energy devices, such as wind turbines, DC generators, and fuel cells.

1.2.7 -58 VDC

Acknowledging the introduction of lithium batteries and batteries with embedded converters, the power system supports -58 VDC.

© 2026 Vertiv Group Corp. All Rights Reserved.

1.2.8 Vertiv™ NetSure™ 7100 Energy 500A

The primary bus, which supports the load and battery, is rated for a maximum of 500 A at 55°C. As it is possible to place-generate more than 500 A, given the configuration options, the load and battery must be configured by responsible personnel to never exceed the maximum current. Limiting can be implemented in different ways, including but not limited to Battery Current Limiting and limiting the Rectifiers and Converters themselves.

Please refer to Table 4.3 for the maximum current for specific branches at specific ambient temperatures. A maximum of six (6) rectifiers R48-4300E3 and six (6) solar converters S48-4300E4 are supported.

1.2.9 Vertiv™ NetSure™ 7100 Energy 750A

The primary bus, which supports the load and battery, is rated for a maximum of 750 A at 55°C. As it is possible to place-generate more than 750 A, given the configuration options, the load and battery must be configured by responsible personnel to never exceed the maximum current. Limiting can be implemented in different ways, including but not limited to Battery Current Limiting and limiting the Rectifiers and Converters themselves.

Please refer to Table 4.3 for the maximum current for specific branches at specific ambient temperatures. A maximum of nine (9) rectifiers R48-4300E3 and nine (9) solar converters S48-4300E4 are supported.

1.2.10 Vertiv™ NetSure™ 7100 Energy 1000A

The primary bus, which supports the load and battery, is rated for a maximum of 1000 A at 55°C. As it is possible to place-generate more than 1000 A, given the configuration options, the load and battery must be configured by responsible personnel to never exceed the maximum current. Limiting can be implemented in different ways, including but not limited to Battery Current Limiting and limiting the Rectifiers and Converters themselves.

Please refer to Table 4.3 for the maximum current for specific branches at specific ambient temperatures. A maximum of twelve (12) rectifiers R48-4300E3 and twelve (12) solar converters S48-4300E4 are supported.

1.2.11 NCU Controller

The system contains one (1) NetSure™ Control Unit (NCU) system controller. The controller provides power and energy system control (including load disconnect), rectifier-converter control communications, metering and monitoring functions, local/remote alarm functions with data-logging, plus advanced battery and energy management. Temperature sensors may also be designated to monitor ambient temperature and/or battery temperature. For lead batteries, the controller with the temperature sensor supports battery charge temperature compensation. For ease of use, the controller front end includes a color LCD display with a keypad for local access.

An expanded view (a large screen) can also be achieved using the Ethernet Port to use the web-interface connection with a local or remote laptop. This Ethernet (TCP/IP) port may also be used for remote management, using standard interfaces such as SNMP, and provides for NTP. Refer to the NCU Control Unit Instructions (11KO7503JL) for more information.

1.2.12 CAN Bus Extension

A CAN bus extension is available to connect to other Vertiv devices. Refer to Figure 4.7 for the location of the CAN bus.

1.2.13 RS232, RS485, and Fuel Sensor Connector

A connection board mounted above the controller extends functionality and communications, such as RS232 for modems, RS485 (Modbus RTU 485 Northbound and Southbound) for connecting with smart devices such as lithium batteries, and two fuel sensor ports to help monitor and manage fuel.

1.2.14 IB2, IB4, EIB, and DC SPD Board

Optional boards (IB2, IB4, EIB, and DC SPD) are available in the subrack. These boards are for additional protection, monitoring, and control. Refer to the Circuit Diagram (BMK22302-01-CD) for more information.

© 2026 Vertiv Group Corp. All Rights Reserved.

1.2.15 Load Disconnect, including the Optional Two or Three-Stage Priority

To prolong the service of critical loads during a long unplanned power outage, the DC distribution can be divided into a maximum of three (3) branches. In this way, load disconnection can be made in discrete steps, extending service without having to increase investment in batteries.

- 500A Power System - The solution can be configured with one (1) to three (3) load disconnects
- 750A Power System – The solution can be configured with two (2) to three (3) load disconnects
- 1000A Power System – The solution can be configured with two (2) load disconnects

400 A and 200 A disconnects are available, and their combination depends on the specific configuration. Two (2) of the disconnects are bi-stable, and if a third one is included, that one is mono-stable.

The 200 A disconnects can be equipped with shunts. When using three (3) disconnects, only two (2) shunts are installed on 200 A disconnects, and the current of the third disconnect is calculated.

1.2.16 Solar Input with PV SPD

1.2.15.1 Solar Input Shelf with PV SPD

The power system can be equipped with up to two (2) optional solar input shelves. These 3U shelves are available in 19” or 23” variants and are mounted below the power subrack.

Each input is protected with a PV input circuit breaker and PV SPD EN50539-11 PV Class II, Type 2/C, rated for the application. Options include thermal magnetic PV input circuit breakers for up to 55°C ambient temperature or hydraulic magnetic PV input circuit breakers for up to 65°C ambient temperature.

- Each 19” shelf supports five (5) Solar S48-4300E4 modules for 4 to 10mm² wires
- Each 23” shelf supports six (6) Solar S484300E4 modules for 4 to 10mm² wires

1.2.15.2 Solar Input Unit with PV SPD in NetSure™ Cabinet

Typically, the Solar Input Shelf is installed below the power system, but when a power subrack is installed in the Vertiv NetSure™ standalone cabinet, the PV input circuit breakers and PV SPDs are placed in the units above the power subrack. Refer to Figure 1.1. These options are available only for the 23” power subrack in these variants:

- 3U (+ 1U cabling) unit supporting six (6) Solar S48 modules
- 6U (+1U for cabling) unit supporting twelve (12) Solar S48 modules

© 2026 Vertiv Group Corp. All Rights Reserved.

1.2.17 19” Subrack variants

Table 1.1 NetSure™ 7100 Energy Power System 19” Subrack

Picture of Subrack	Variants of Subrack System
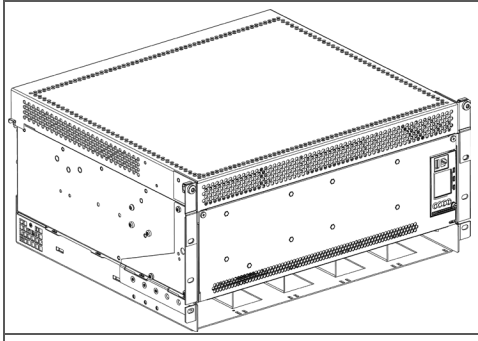	NetSure™ 7100 Energy 500A Subrack System with one rectifier/solar converter shelf, top cover, no XDU, and with top cover (5U)
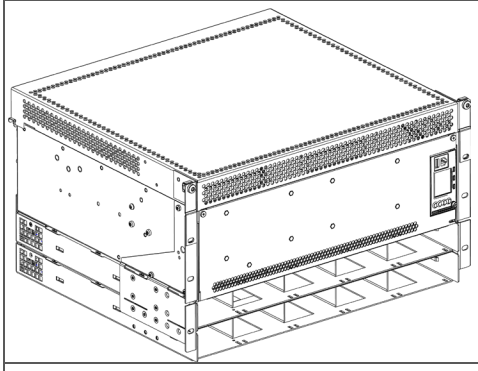	NetSure™ 7100 Energy 500A Subrack System with two rectifier/solar converter shelves, no XDU, and with top cover (6U)
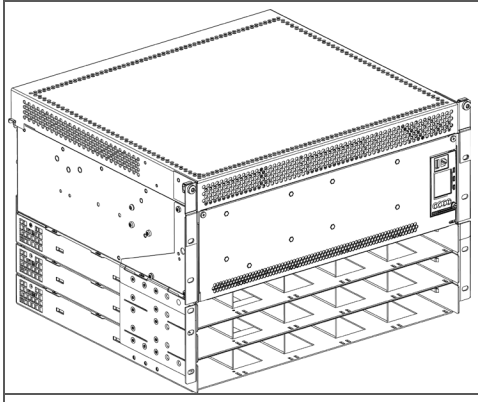	NetSure™ 7100 Energy 500A Subrack System with three rectifier/solar converter shelves, no XDU, and with top cover (7U)
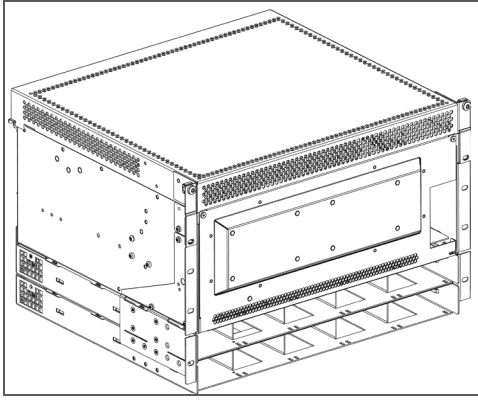	NetSure™ 7100 Energy 750A Subrack System with two rectifier/solar converter shelves, no XDU, and with top cover (7U)

© 2026 Vertiv Group Corp. All Rights Reserved.

Picture of Subrack	Variants of Subrack System
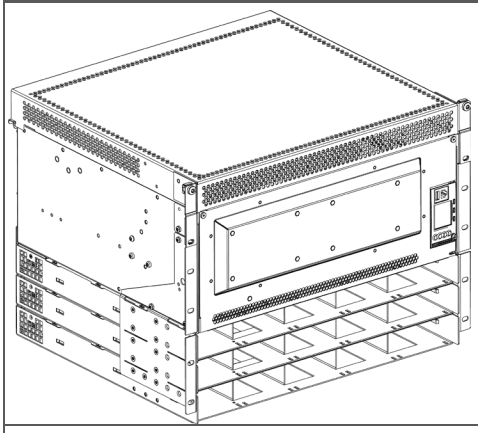	NetSure™ 7100 Energy 750A Subrack System with three rectifier/solar converter shelves, no XDU, and with top cover (8U)
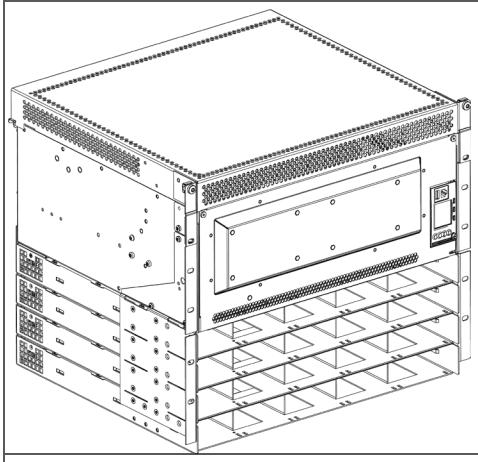	NetSure™ 7100 Energy 750A 7100 Subrack System with four rectifier/solar converter shelves, no XDU, and with top cover (9U)
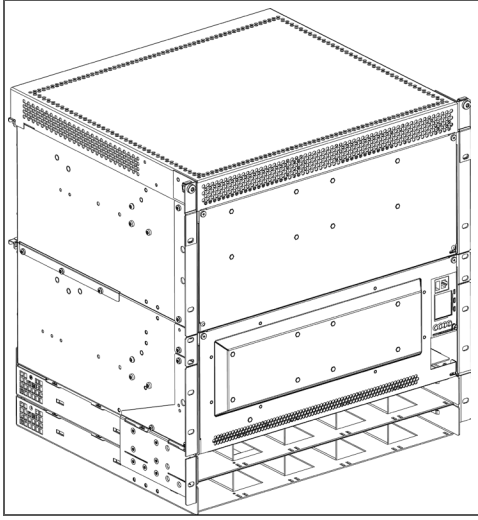	Example Configuration: NetSure™ 7100 Energy 750A Subrack System with two rectifier/solar converter shelves, optional XDU, and with top cover (11U) ***NOTE 1!*** *Illustrated an example of the system with XDU. This optional 4U XDU is available for all system configuration options above.* ***NOTE 2!*** *1U Top cover is optional in all configurations above.*

© 2026 Vertiv Group Corp. All Rights Reserved.

Picture of Subrack	Variants of Subrack System
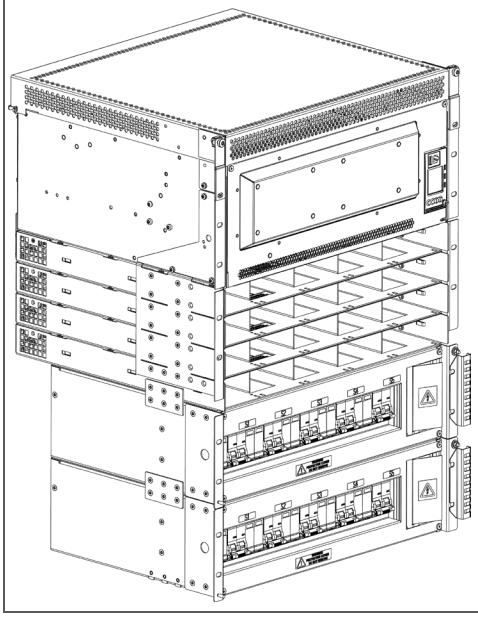	Example Configuration: NetSure™ 7100 Energy 750A Subrack System with four rectifier/solar converter shelves, no XDU, two Solar Input Shelves with PV SPD and with top cover (15U) ***NOTE!*** *Illustrated an example of the system with Solar Input shelves. Up to 2pcs of Solar Input Shelves are optional for all system configuration options above. (Based on the quantity of solar converter shelves). Can be configured with XDU.*

1.2.18 23” Subrack Variants

Table 1.2 NetSure™ 7100 Energy Power System - 23” Subrack

Picture of Subrack	Variants of Subrack System
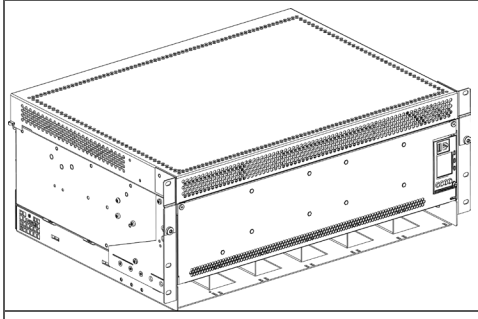	NetSure™ 7100 Energy 500A Subrack System with one rectifier/solar converter shelf, no XDU, and with top cover (5U) 500 A
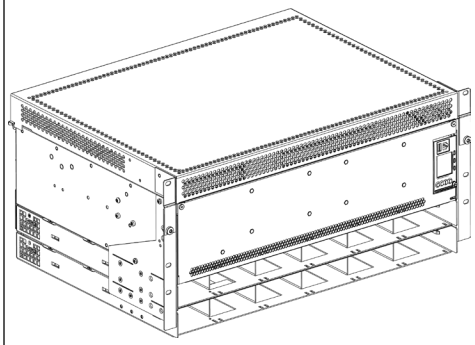	NetSure™ 7100 Energy 500A Subrack System with two rectifier/solar converter shelves, no XDU, and with top cover (6U)

© 2026 Vertiv Group Corp. All Rights Reserved.

Picture of Subrack	Variants of Subrack System
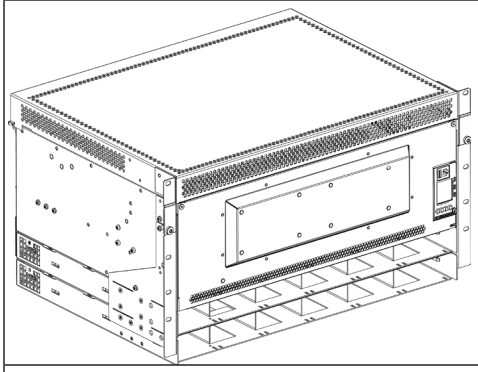	NetSure™ 7100 Energy 750A Subrack System with two rectifier/solar converter shelves, no XDU, and with top cover (7U)
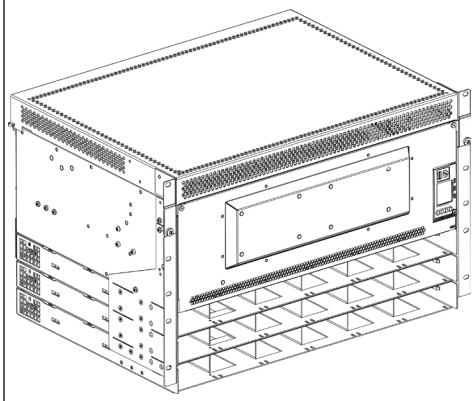	NetSure™ 7100 Energy 750A Subrack System with three rectifier/solar converter shelves, no XDU, and with top cover (8U)
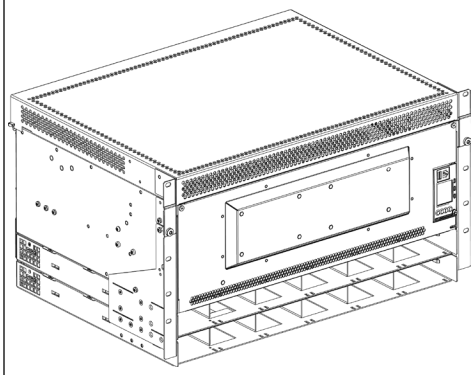	NetSure™ 7100 Energy 1000A Subrack System with two rectifier/solar converter shelves, no XDU, and with top cover (7U)
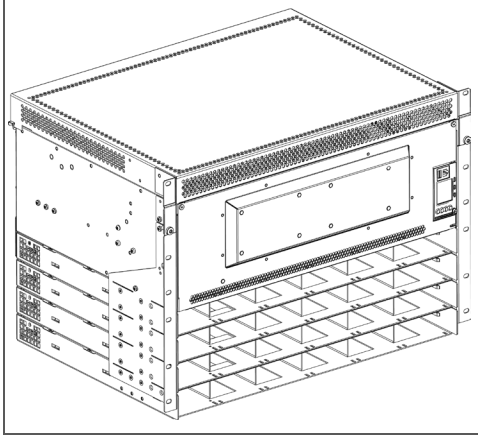	NetSure™ 7100 Energy 1000A Subrack System with four rectifier/solar converter shelves, no XDU, and with top cover (9U)

© 2026 Vertiv Group Corp. All Rights Reserved.

Picture of Subrack	Variants of Subrack System
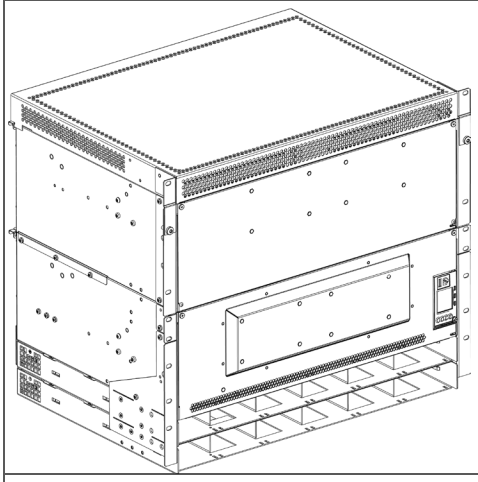	Example Configuration: NetSure™ 7100 Energy 1000A Subrack System with two rectifier/solar converter shelves, optional XDU, and with top cover (10U) ***NOTE 1!*** *Illustrated an example of the system with XDU. This optional 4U XDU is available for all system configuration options above.* ***NOTE 2!*** *1U Top cover is optional in all configurations above.*
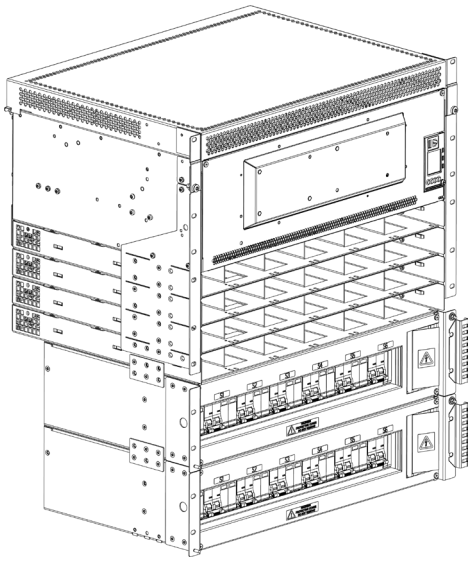	Example Configuration: NetSure™ 7100 Energy 1000A Subrack System with four rectifier/solar converter shelves, no XDU, two Solar Input Shelves with PV SPD and with top cover (15U) ***NOTE!*** *Illustrated an example of the system with Solar Input shelves. Up to 2 pcs of Solar Input Shelves are optional for all system configuration options above (Based on the quantity of solar converter shelves). Can be configured with XDU.*

© 2026 Vertiv Group Corp. All Rights Reserved.

1.3 23” Subrack with Solar Input Unit with PV SPD in NetSure™ Cabinet

Figure 1.1 23” Subrack with Solar Input Unit with Input PV SPD in NetSure™ Cabinet

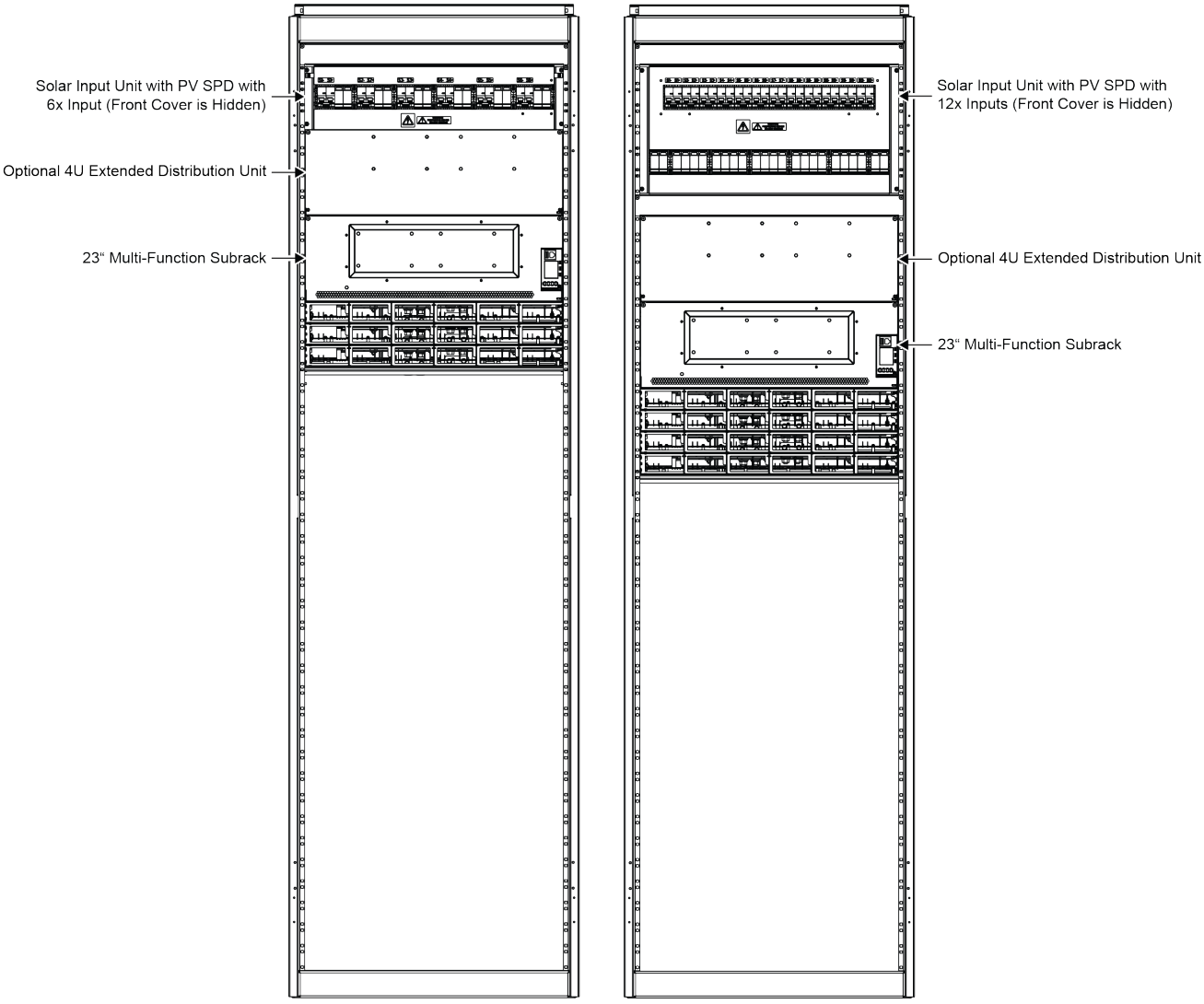

© 2026 Vertiv Group Corp. All Rights Reserved.

1.4 Installation Acceptance Checklist

The following Installation Acceptance Checklist is provided below. This checklist helps ensure proper installation and initial operation of the system. As you complete the installation procedures presented in this document, check the appropriate box on this list. If a procedure is not required for your installation site, check the box to indicate that you have read the procedure. Ensure that each block in this list has been checked when the installation is complete.

NOTE! *Do not power the cabinet until completing the checklist.*

NOTE! *Some of these procedures may have been performed at the factory for you.*

Physically Installing the System

- ❑ NetSure™ Standalone Cabinet Mounted (if provided)
- ❑ Standalone Subrack Mounted in Customer Cabinet (if provided)
- ❑ Standalone Subrack Mounted on Battery Stand (if provided)
- ❑ Solar Input Shelf with PV SPDs Mounted (if provided)

Setting Switch Options

- ❑ Switch Settings on Optional IB2 Interface Board Verified
- ❑ Switch Settings on Optional EIB Interface Board Verified

Making Electrical Connections

- ❑ Ground Connections Made
- ❑ Solar DC Input Connections Made
- ❑ AC Connections Made
- ❑ DC Load Distribution Connections Made
- ❑ Independent DC Power Port Connections Made
- ❑ Battery Connections Made
- ❑ External Alarm, Reference, Monitoring, and Control Connections Made
- ❑ Ethernet Connection Made (if required)

Module Installation and Initially Starting the System

- ❑ Rectifier Modules Installed
- ❑ Solar Converter Modules Installed
- ❑ System Started, Configured, and Checked

© 2026 Vertiv Group Corp. All Rights Reserved.

2 Physically Installing the Power System

2.1 General Requirements

- This product is intended only for installation in a restricted access location on or above a non-combustible surface.
- This product must be located in a controlled environment with access limited to authorized technicians only.
- This product is intended for installation in network telecommunication facilities (CO, vault, hut, or other environmentally controlled electronic equipment enclosures).
- This product is intended for connection to the common bonding network in a network telecommunication facility (CO, vault, hut, or other environmentally controlled electronic equipment enclosures).
- The installer should be familiar with the installation requirements and techniques for securing the battery rack or cabinet enclosure to the floor.
- The NetSure™ 7100 subracks can be mounted in either 19” or 23” wide and a minimum 600 mm deep enclosures or cabinets.
- The NetSure™ 7100 subracks require bottom support in all mounting variants (cabinet enclosure or battery rack). Do not install without proper bottom support!
- Cabinet enclosure or subrack ventilation openings must not be blocked, and the temperature of air entering rectifiers must not exceed their rated operating ambient temperature range.

NOTE! *Use of large–diameter wire may require greater clearance.*

2.2 Vertiv indoor cabinets and Battery Racks

Vertiv offers the following cabinets and battery racks.

Table 2.1 Available Vertiv indoor Cabinet and Battery Rack Options for NetSure™ 7100 Subrack

Properties	Comment	Depth** (mm)	Width (mm)	Height*** (mm)	Available Space for Batteries	Product Number
NetSure™ Standalone Cabinet *	With or without a door	600/620	600	891 (17U)	Depends on configuration	BMY1100025-6
		600/620	600	1870 (39U)	Depends on configuration	BMY1100025/1
		600/620	600	2048 (43U)	Depends on configuration	BMY1100025/2
Battery Rack	For mounting standalone subrack	600	600	780	2x 8U	BMY1100040/628
		600	600	1106	3x 8U	BMY1100040/638
		600	600	1462	4x 8U	BMY1100040/648

NOTE! *If cabinets marked with an asterisk (*) are ordered with the subrack system, the system will be factory-mounted in the cabinet.*
(**) Depth without door 600mm
(***) Height without Adjustable feet

© 2026 Vertiv Group Corp. All Rights Reserved.

2.3 Mounting a NetSure™ Standalone Cabinet (if provided)

If the subrack is mounted in an indoor NetSure™ standalone cabinet, the clearance requirements are:

- Recommended minimum aisle space clearance for the front of each bay is 600 mm.
- No clearance is required for the rear of each cabinet.
- Recommended minimum free space above each cabinet is 300 mm.

If the subrack was shipped in a NetSure™ standalone cabinet, the cabinet can be anchored to the floor by screws through its bottom frame. As an alternative, the cabinet can be fixed to the wall with suitable screws through the holes at the back of its top cover. The materials (not included) should be chosen to fit the floor/wall material.

If adjustable feet are required, a kit is available (P/N BMY220045/1) that includes four (4) adjustable feet with plastic isolation. In this case, the cabinet can be anchored to the wall only.

2.3.1 Installing Optional Foot Kit (if required)

NOTE! *If adjustable feet are not required, skip this procedure.*

A kit is available (P/N BMY220045/1) that includes four adjustable feet with plastic isolation. If the option feet are provided, refer to Figure 2.1 for a procedure.

NOTE! *If the optional feet are installed, the cabinet cannot be anchored to the floor, and wall anchoring is required.*

© 2026 Vertiv Group Corp. All Rights Reserved.

Figure 2.1 Installing Optional Feet

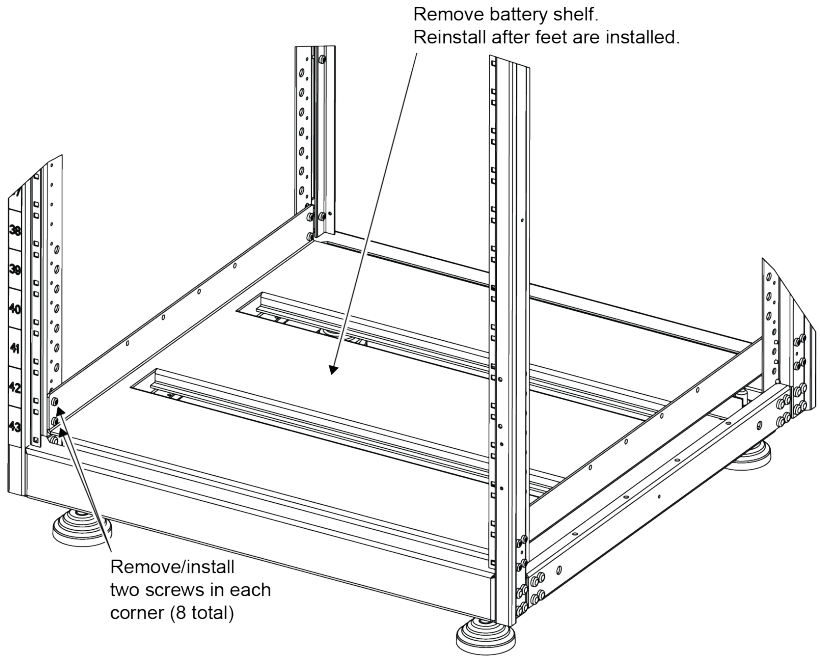

Removing and Installing Battery Shelf Plates (if equipped)

Installing Cabinet Foot

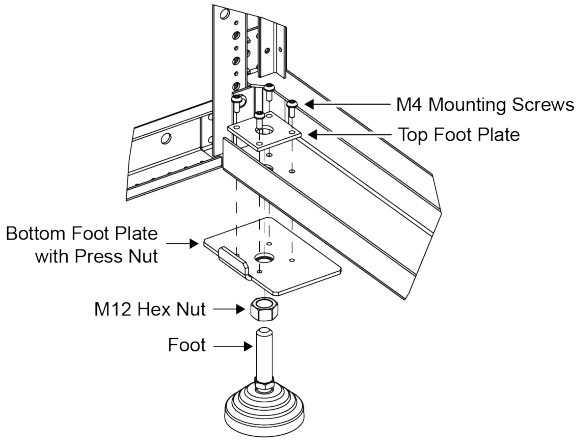

Installing a Set of Feet BMY220045/1:

1. If the cabinet is equipped with battery shelves, remove the bottom battery shelf as shown above.
2. Screw the M12 hex nut and the bottom foot plate with the press nut on the foot.
3. Secure the bottom foot plate to the cabinet with 4x M4 screws and the top foot plate as shown on the left. Tighten screws. The correct tightening torque is 3.2 Nm.
4. Set the foot to the required height and tighten the M12 hex nut. The correct tightening torque is 45 Nm.
5. Repeat steps 2 through 4 for each of the remaining feet.
6. If the battery cabinet is eqquipped with battery shelves, reinstall the bottom battery shelf as shown above.The correct tightening torque for screws is 4 Nm.

© 2026 Vertiv Group Corp. All Rights Reserved.

2.3.2 Anchoring to the Floor

NOTE! *A set of parts, BMY107125/1, furnished with each cabinet, provides cabinet anchoring material for the floor and the wall.*

Procedure

1. Drill holes in the floor and insert suitable plugs in the holes. Refer to Figure 2.2 for floor mounting, the whole dimensions.
2. Place the cabinet into position.
3. Level the cabinet by placing metal plates or washers under the cabinet frame.
4. Fix the cabinet with four (4) screws through its frame. See Figure 2.3.

Figure 2.2 Floor Mounting Dimensions

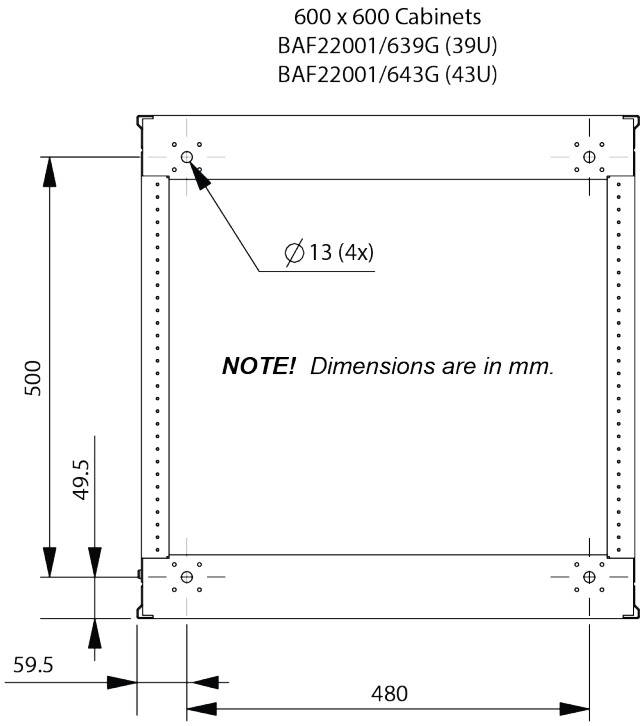

© 2026 Vertiv Group Corp. All Rights Reserved.

2.3.3 Anchoring to the Wall

NOTE! *A set of parts, BMY107125/1, furnished with each cabinet, provides cabinet anchoring material for the floor and the wall.*

Procedure

1. Place the cabinet in its position.
2. Level the cabinet by placing metal plates or washers under the cabinet frame or by fitting and adjusting feet in the holes of the cabinet frame.
3. Drill two (2) holes in the wall and insert suitable plugs in the holes. Fix the cabinet to the wall with two (2) screws. See Figure 2.3.

Figure 2.3 Anchoring the Cabinet (Top cabled cabinet shown. Bottom cabled cabinet similar.)

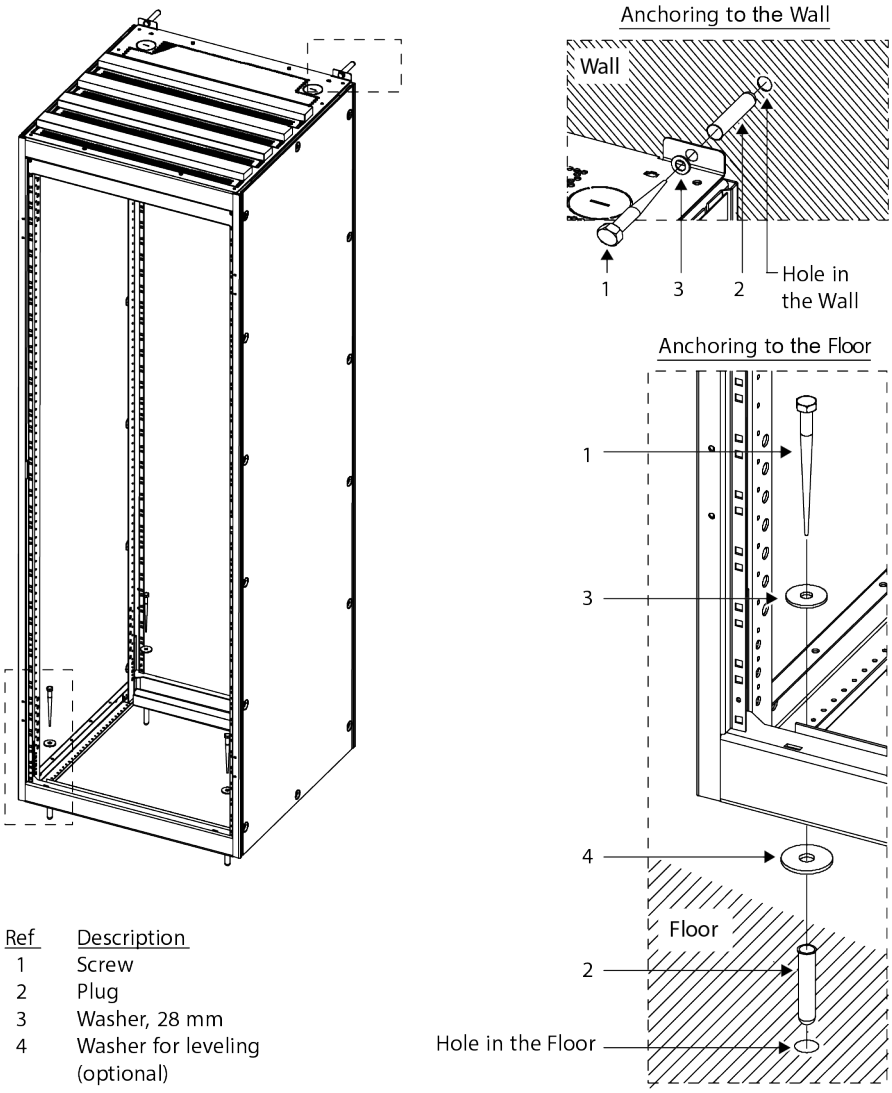

Ref	Description
1	Screw
2	Plug
3	Washer, 28 mm
4	Washer for leveling (optional)

© 2026 Vertiv Group Corp. All Rights Reserved.

2.4 Mounting a Standalone Subrack in a Customer-Provided Cabinet

Each subrack should be fixed to the cabinet using screws through the holes in its angle brackets.

The following conditions apply:

- The rectifiers/solar converters are fan-cooled and utilize front-to-back forced ventilation. For proper airflow, the units must be mounted with space in front, so that all ventilation openings are not blocked. The free space in front of the units must be ≥ 30 mm in the condition of fully perforated ventilated doors/covers to keep unobstructed airflow.
- For cooling, a clear space of 100 mm must be maintained at the rear for the rectifiers/solar converters. This chimney section must not be obstructed by any horizontal plates. No mechanical parts or cables are allowed within the 100 mm free space. Refer to Figure 2.4.
- The mains, solar array, distribution, and battery cables enter through the top of the subrack. There must be room above the subrack for cable management.

NOTE! *When solar input shelves with PV SPD are installed, the DC input cables must be connected from the front-right side of the unit.*

- Depending on the cabinet and mounting practice, some high-energy parts of the subracks might be accessible. These parts must be covered according to EN62368-1.
- Mounting brackets should be factory-mounted to the correct position (0 mm or 75 mm offset) from the factory. The required position must be provided. Refer to Figure 2.5.
- The NetSure™ 7100 subrack requires a bottom support plate. Do not install without the proper bottom support!

Figure 2.4 Subrack Space Requirements

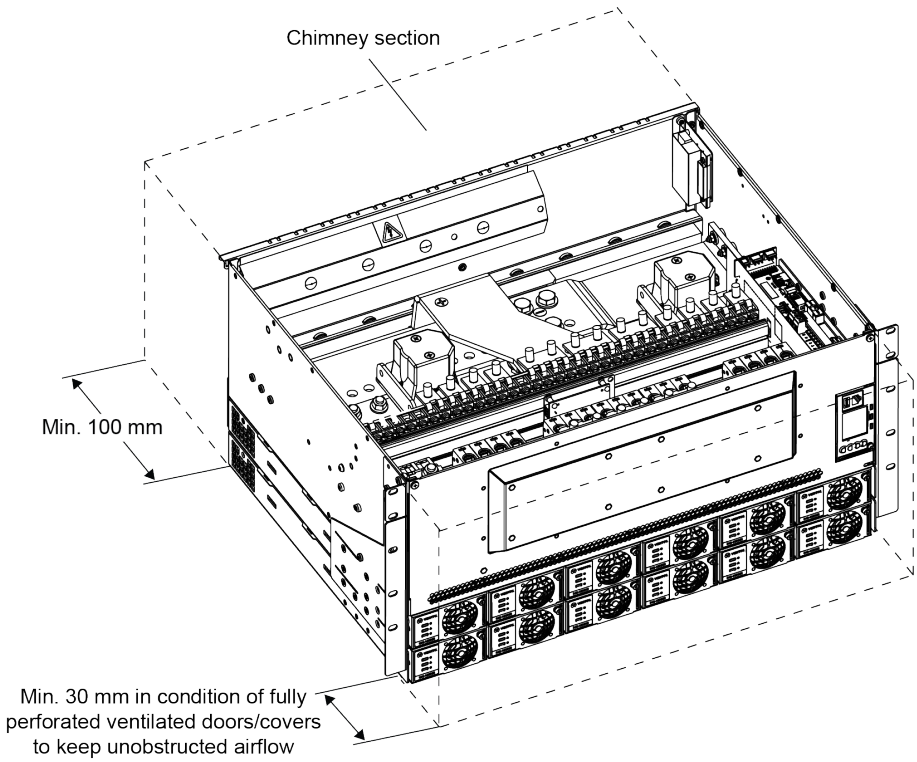

© 2026 Vertiv Group Corp. All Rights Reserved.

Figure 2.5 Positions of Mounting Brackets

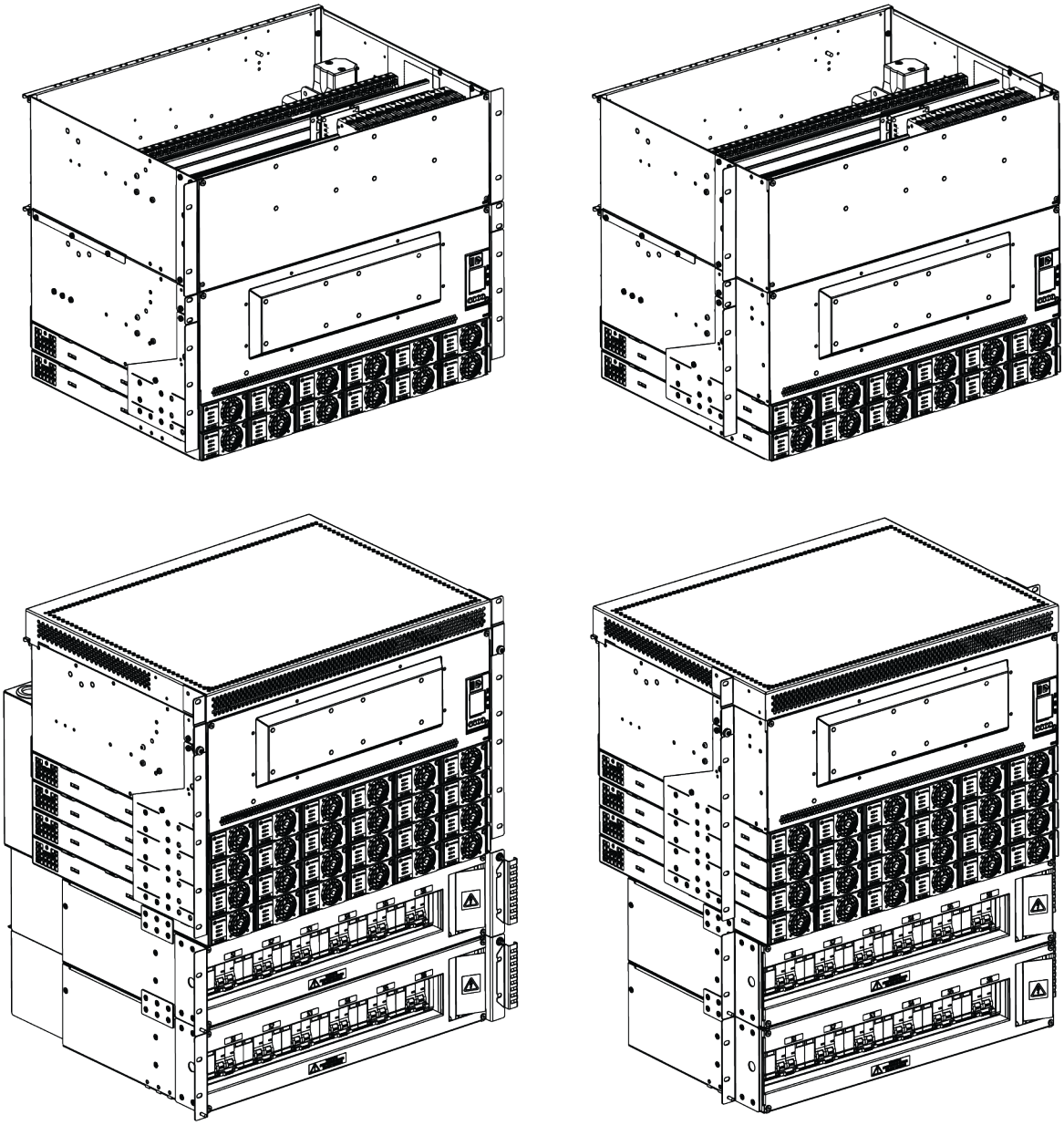

0 mm Offset

75 mm Offset

© 2026 Vertiv Group Corp. All Rights Reserved.

2.5 Mounting a Standalone Subrack on a Battery Rack

DANGER! The battery rack must be securely anchored to the floor before mounting system components on top of the battery rack.

The standalone subrack system can be mounted on a Vertiv battery rack.

2.5.1 Installing the Battery Rack

The battery rack must be assembled on site. Refer to the documentation supplied with the battery rack. After assembling the battery rack, place it into position. Refer to the “General Requirements” at the beginning of this chapter.

The battery rack must be secured to the floor. Secure the battery rack to the floor per site requirements.

Figure 2.6 Footprint of Battery Rack BAF60122

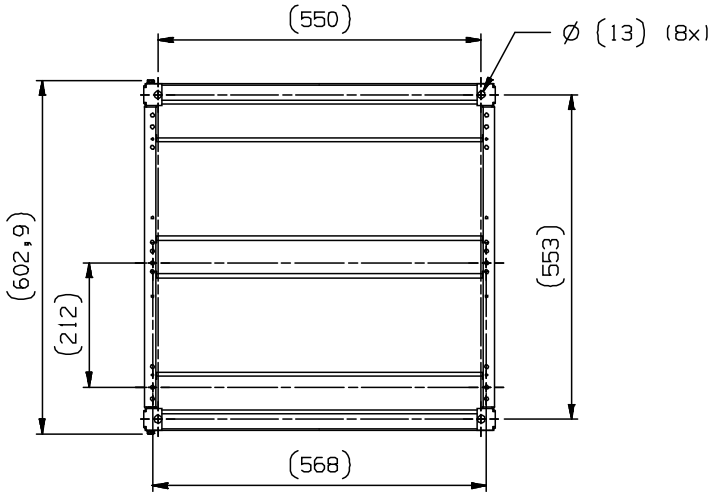

2.5.2 Installing the Subrack on the Battery Rack

Refer to the procedure in Figure 2.7 to install the standalone power system subrack on the battery rack.

© 2026 Vertiv Group Corp. All Rights Reserved.

Figure 2.7 Mounting the Standalone Subrack on the Battery Rack

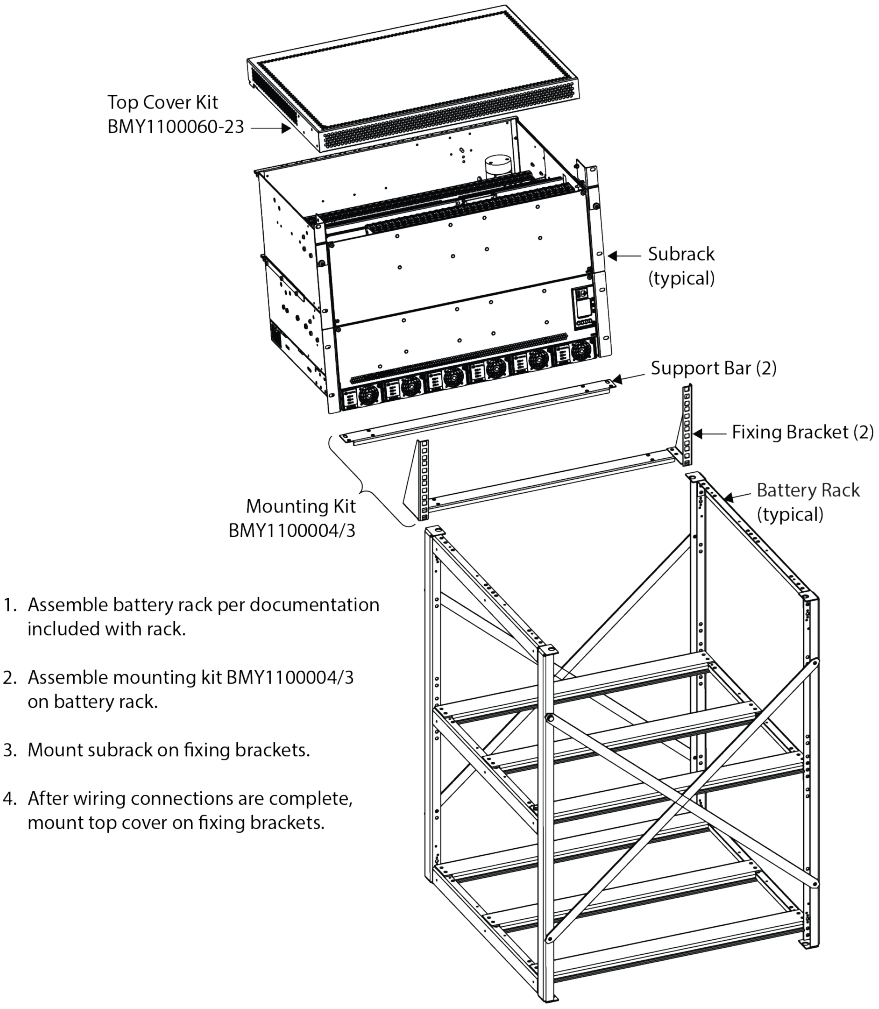

2.6 Installing VRLA Batteries in a Battery Rack

Procedure

1. Put the battery blocks in position, starting on the first (bottom) shelf.
2. Install the interconnectors between each block with the torque shown in the battery documents.

NOTE! *For safety reasons, leave out one of the inter-cell connectors until the appropriate stage in the commissioning of the power supply plant.*

3. Battery connections to the subrack will be made in a later procedure.

2.7 Installing Load Distribution or Battery Disconnect Circuit Breakers

Load distribution and battery disconnect circuit breakers are factory-installed. If space is available and you wish to install additional circuit breakers, refer to the “Adding a Load Distribution or Battery Disconnect Circuit Breaker” on page 45.

© 2026 Vertiv Group Corp. All Rights Reserved.

2.8 Mounting the optional Solar Input Shelf with PV SPD

Depending on the usage, the power system can be equipped with up to two (2) solar input shelves. These optional units are shipped separately. Mechanical and electrical connections to the power subrack must be completed on site. When installing into a rack or cabinet that has no rear access, the mechanical and electrical connections of the solar input shelf (shelves) to the subrack must be made first, prior to mounting into the rack and/or cabinet. The solar input shelf with PV SPD must be securely fastened on both sides using fixing brackets and six (6) bolts per side. Refer to Figure 2.8 for installation details. The fixing brackets and bolts are enclosed in the package.

Please note that the mounting brackets are not pre-installed at the factory. They are included in the package and must be installed in the correct position - either 0 mm or 75 mm offset, depending on the required configuration. Refer to Figure 2.5 for proper alignment and positioning.

Figure 2.8 Mounting of Solar Input Shelf with PV SPD

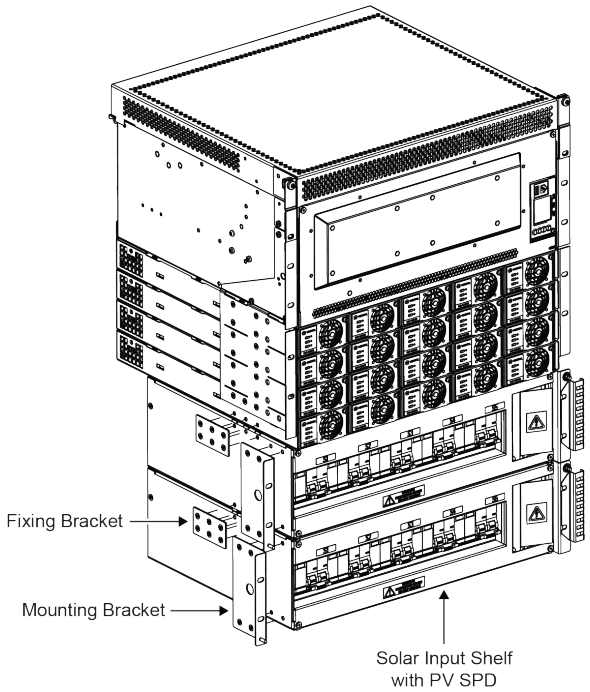

2.8.1 Wiring of Solar Input Shelf with PV SPD

Cables from solar converter module positions are connected to the solar input shelf with PV SPD using Molex connectors. The cables are pre-installed on the power subrack when the ordered with the system. The bottom solar converter shelf must be connected to the very bottom solar input shelf with a PV SPD. The same principle applies to the second-from-bottom solar converter shelf if equipped.

To connect to the NCU SPD Alarm, locate the pre-installed cable RPM6291072/1 inside the power subrack. The cable is part of the cable harness connected to the connector board. To locate the cable harness, locate the connector board, and refer to Figure 4.7 for the connector board location. Connect the free end of the cable to the first solar input shelf connector on the rear side. To connect SPD alarms of two Solar Input Shelves, use cable TRE211061/1608 that is enclosed in the package. For connection details, refer to Figure 2.9 and to the Circuit Diagram (BMK22302-01-CD).

© 2026 Vertiv Group Corp. All Rights Reserved.

Figure 2.9 Wiring of Solar Input Shelf with PV SPD

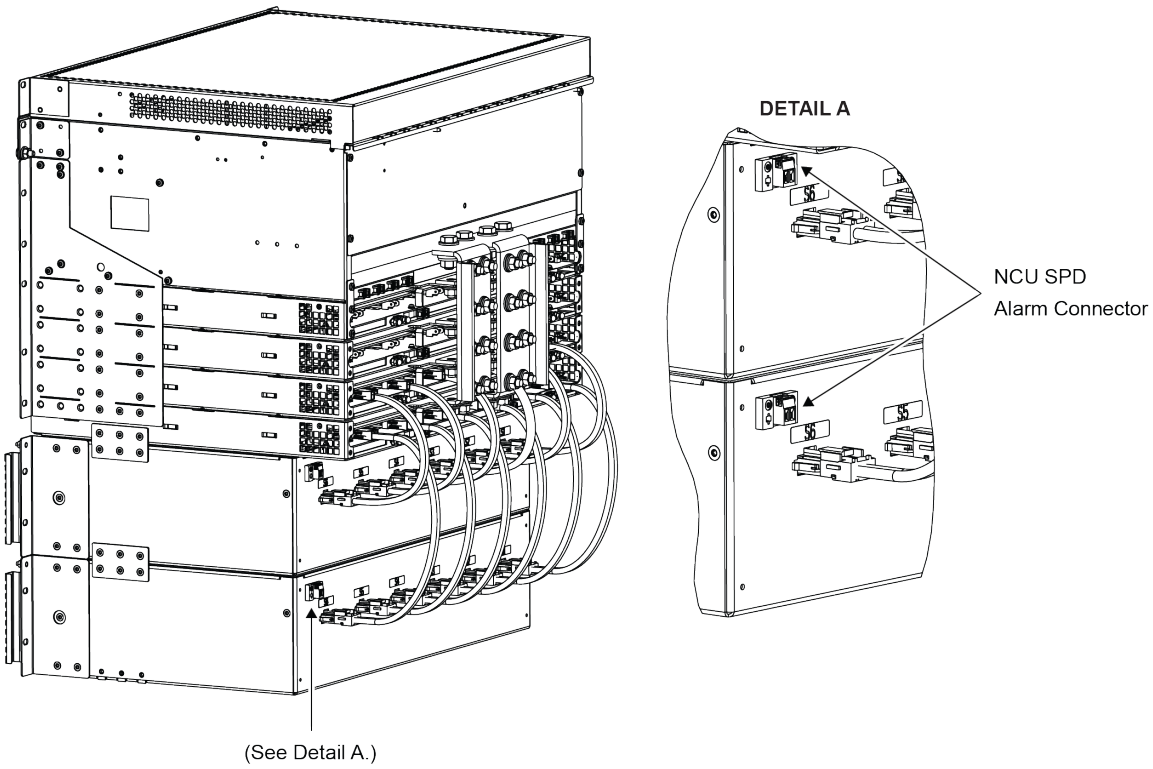

2.8.2 Mounting the Optional Back Covers for the Solar Input Shelf with PV SPD

The solar input shelf with PV SPD can be equipped with optional back covers.

Follow the steps below to complete the installation:

Procedure

1. Remove the back cover from the subrack system by unscrewing it.
2. Tear off the bottom section of the back cover along the pre-defined perforation. It can be easily done by hand. Refer to Figure 2.10.
3. Install the solar input shelf's cover/s with enclosed M4 thread-forming screws. Refer to Figure 2.11.
4. Install the solar input shelf's bottom cover by enclosing M4 thread froming screws. Refer to Figure 2.11.
5. Install the previously removed back cover from the subrack system.

NOTE! *For the correct positioning, refer to Detail A in Figure 2.11.*

© 2026 Vertiv Group Corp. All Rights Reserved.

Figure 2.10 Mounting the Subrack Back Cover

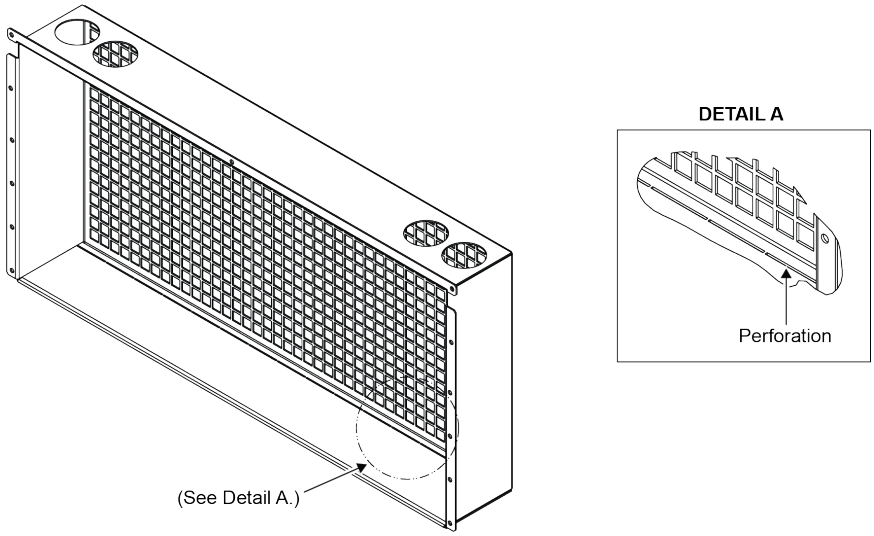

Figure 2.11 Mounting the Back Cover and Bottom Cover

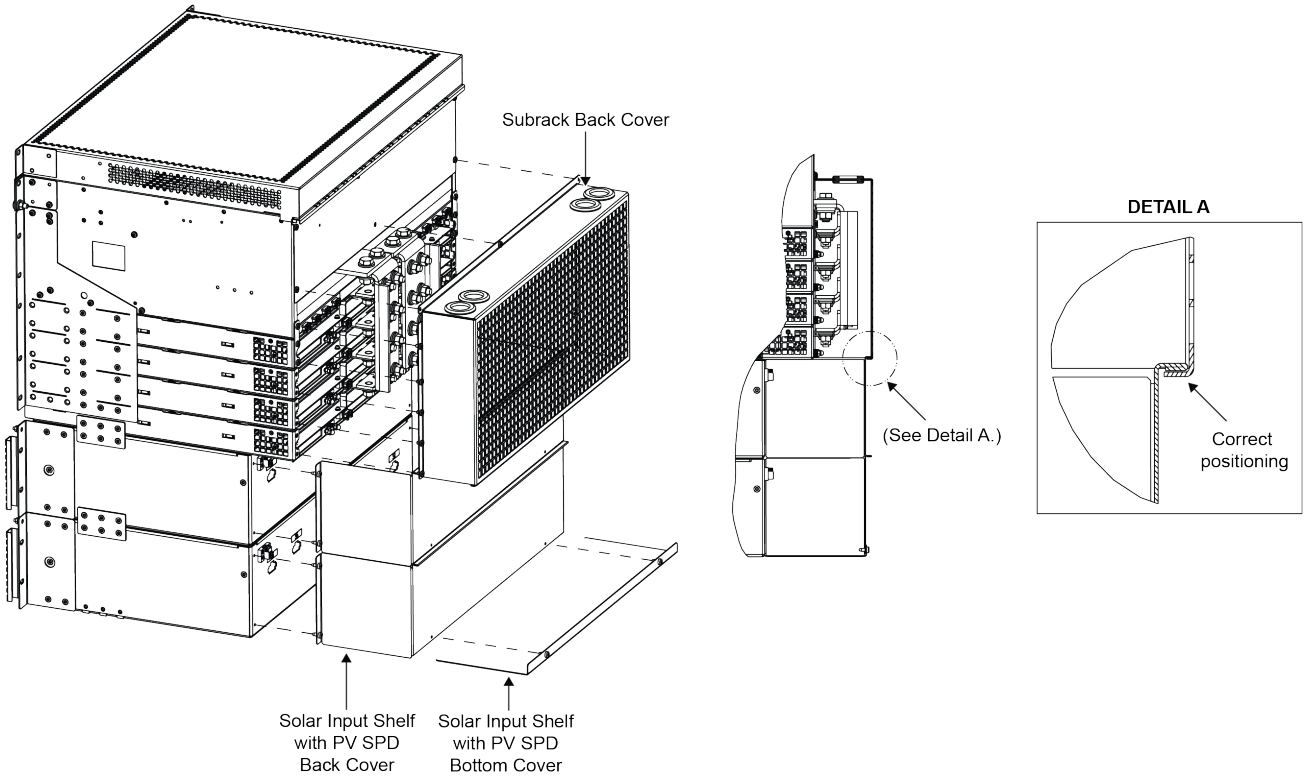

© 2026 Vertiv Group Corp. All Rights Reserved.

3 Setting Switch Options

3.1 Circuit Board Locations

Refer to Figure 3.1 for the location of the boards containing option switches. There are no switch settings for IB4 and the Load SPD Board.

Figure 3.1 Boards Location with Option Switches

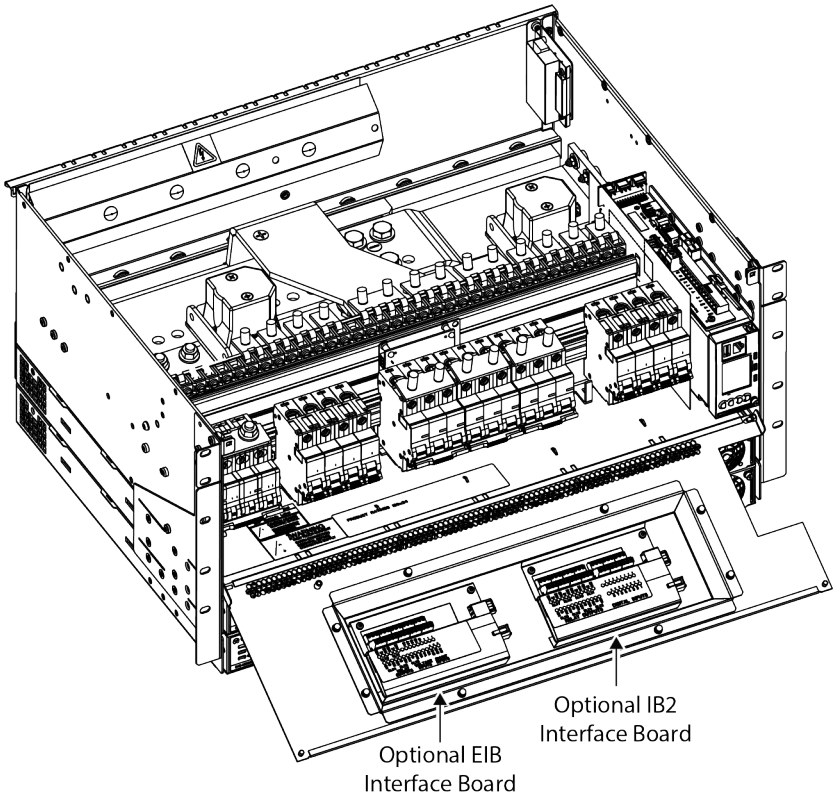

3.2 Switch Settings on Optional EIB and IB2 Interface Board

Dip Switch SW1 on the EIB and IB2 board is used to set the communications address for this board.

Perform the following procedure to verify the factory settings. This procedure can also be used to make adjustments to a replacement circuit board. Refer to Figure 3.2 for switch location.

Procedure

1. Ensure SW1 is set as shown in the table in Table 3.1.

© 2026 Vertiv Group Corp. All Rights Reserved.

Figure 3.2 Optional IB2 and EIB Interface Boards Switch Location and Settings

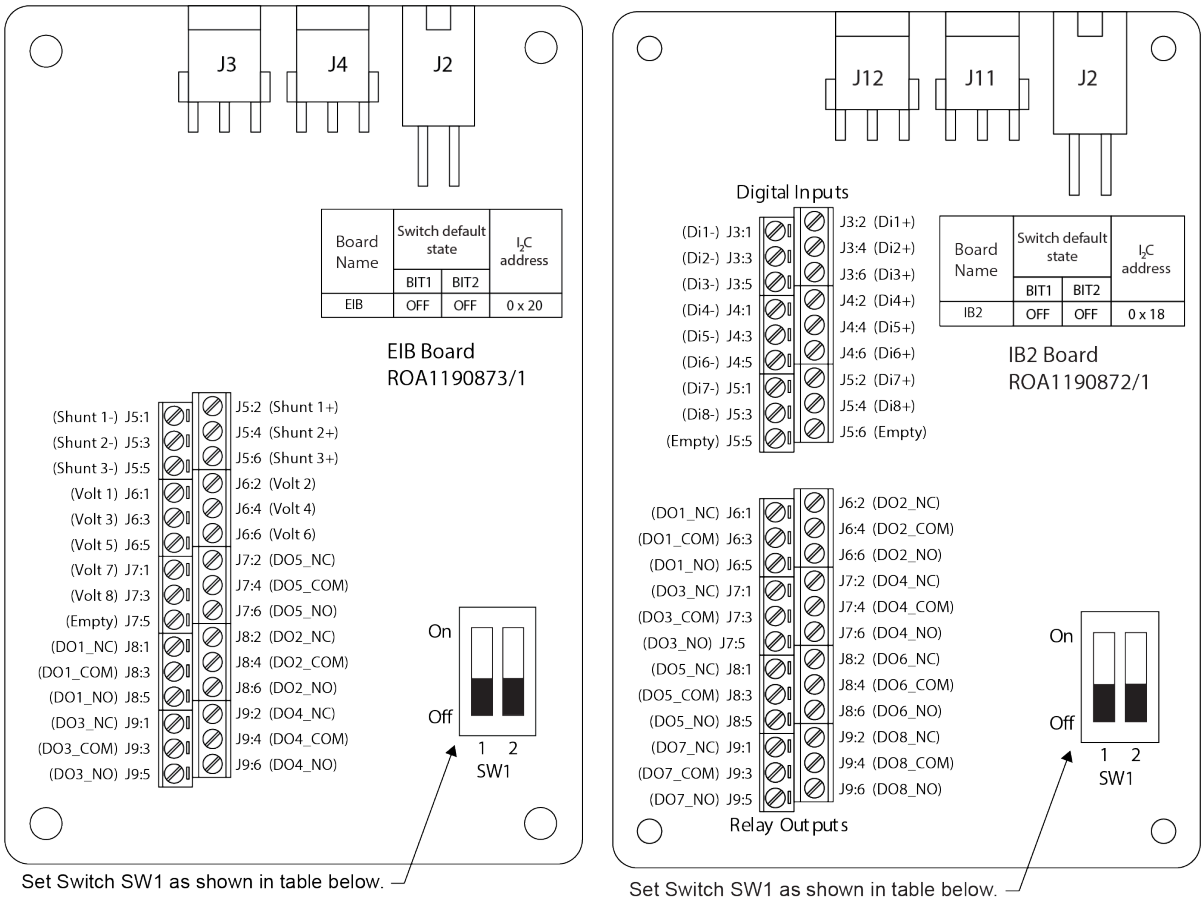

Table 3.1 Optional EIB and IB2 Interface Boards Switch Location and Settings

DIP SW1 Setting	EIB No. 1 Switch State		EIB No. 2 Switch Rate		IB2 No. 1 Switch Rate		IB2 No. 2 Switch Rate	
	1	2	1	2	1	2	1	2
Option 1					OFF	OFF		
Option 2	OFF	OFF						
Option 3	OFF	OFF			OFF	OFF		
Option 4					OFF	OFF	ON	OFF
Option 5	OFF	OFF	ON	OFF				

© 2026 Vertiv Group Corp. All Rights Reserved.

4 Making Electrical Connections

4.1 Important Safety Instructions

DANGER! Adhere to the “Important Safety Instructions” presented at the front of this document.

4.2 Wiring Considerations

All wiring and branch circuit protection should follow the local national electrical building installation standards.

4.3 Earthing Connections

The subracks have internal earthing. The rectifier/solar converter shelves, the mains PE, the mechanical structure of the cabinet, and the system positive (0 V) bars are interconnected to the subracks. Refer to Figure 4.1 for earthing connections.

NOTE! *This equipment is designed to permit the connection of the earthed conductor of the DC supply circuit (system earth) to the common earthing conductor (protective earth) at the equipment.*

Procedure

1. Check that there is an insulated 25 mm² cable between the positive (0 V) terminal of the main subrack positive bar and the earth terminal of the cabinet. This link is essential if a DC short-circuit occurs between the live pole (negative) of the system and the cabinet mechanical structure, as it will protect the mains PE conductors from overload.
2. Connect an insulated cable minimum 25 mm² between the subrack or cabinet chassis and the earth collector bar (MET).

NOTE! *This equipment shall be connected directly to the DC earth collector bar (Main Earth Terminal) or to the point to which the DC supply system earth electrode is connected. There must be no switching or disconnection devices in this circuit. Equipment (DC) located in the same immediate area (such as adjacent cabinets) must be earthed to the same earthing point.*

© 2026 Vertiv Group Corp. All Rights Reserved.

Figure 4.1 Earthing Principle for the NetSure™ 7100 Energy System

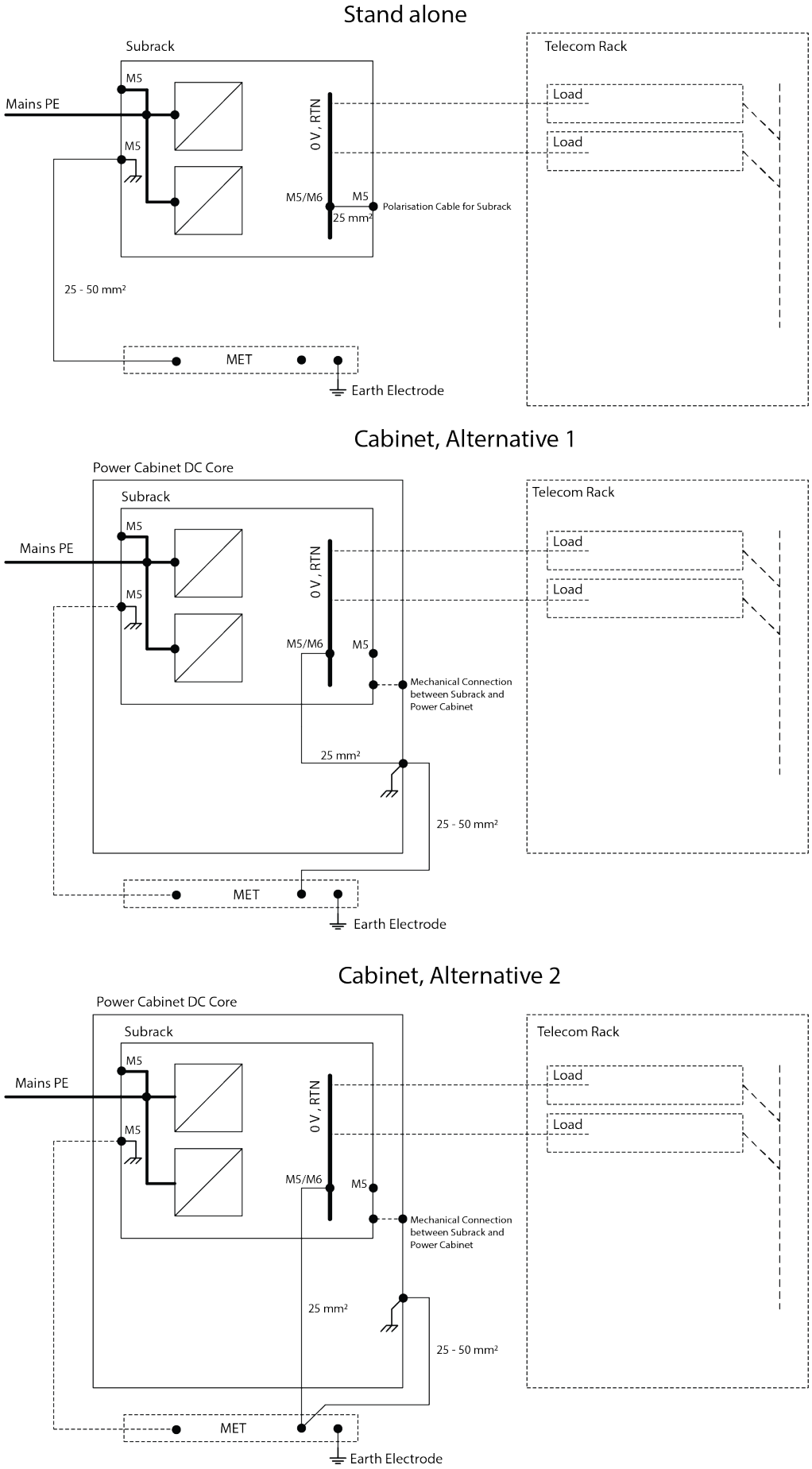

© 2026 Vertiv Group Corp. All Rights Reserved.

4.4 Cable Routing Guidelines

4.4.1 Subrack in NetSure™ Cabinet

Top Cabling: The cables enter the top of the cabinet. There are three (3) flexible cable inlets mainly used for DC cables and signal cables, and two (2) knockouts for AC cables. Using an AC knockout is optional and depends on the configuration. Flexible cable inlets can be used to connect the AC cables, too. Refer to Figure 4.2 for the details.

If the AC cable knockout is used, a suitable strain relief bushing PG36/PR36 D22-32 should be installed in the knockout prior to installing cables. One cable bushing is enclosed in a package.

In order to avoid the risk of objects falling into the cabinet, close all the flexible inlets and tighten their screws after the installation. For large cables, it is necessary to cut the foam (to cable width) for exact adjustment. Refer to Figure 4.1.

4.4.2 Standalone Subrack

If the top cover is used, it must be temporarily removed to make electrical connections.

Load, Battery, independent DC Power Port Wiring and Signaling Wiring: The cables are routed from the rear of the top cover if it is used. The top cover includes a flexible foam strip that will form around the wiring to seal the opening when the top cover is installed after wiring is completed.

Individual AC Mains and DC solar input Wiring: The cables are routed from the rear of the top cover if it is used. The top cover includes a flexible foam strip that will form around the wiring to seal the opening when the top cover is installed after wiring is completed. If an optional solar input shelf with PV SPD is included, the DC cables are routed from the front right side of the unit, where the DC connection terminals are placed. For more information about Individual AC Mains and DC solar input connection, refer to the Circuit Diagram (BMK22302-01-CD).

Figure 4.2 NetSure™ Cabinet Cable Inlets

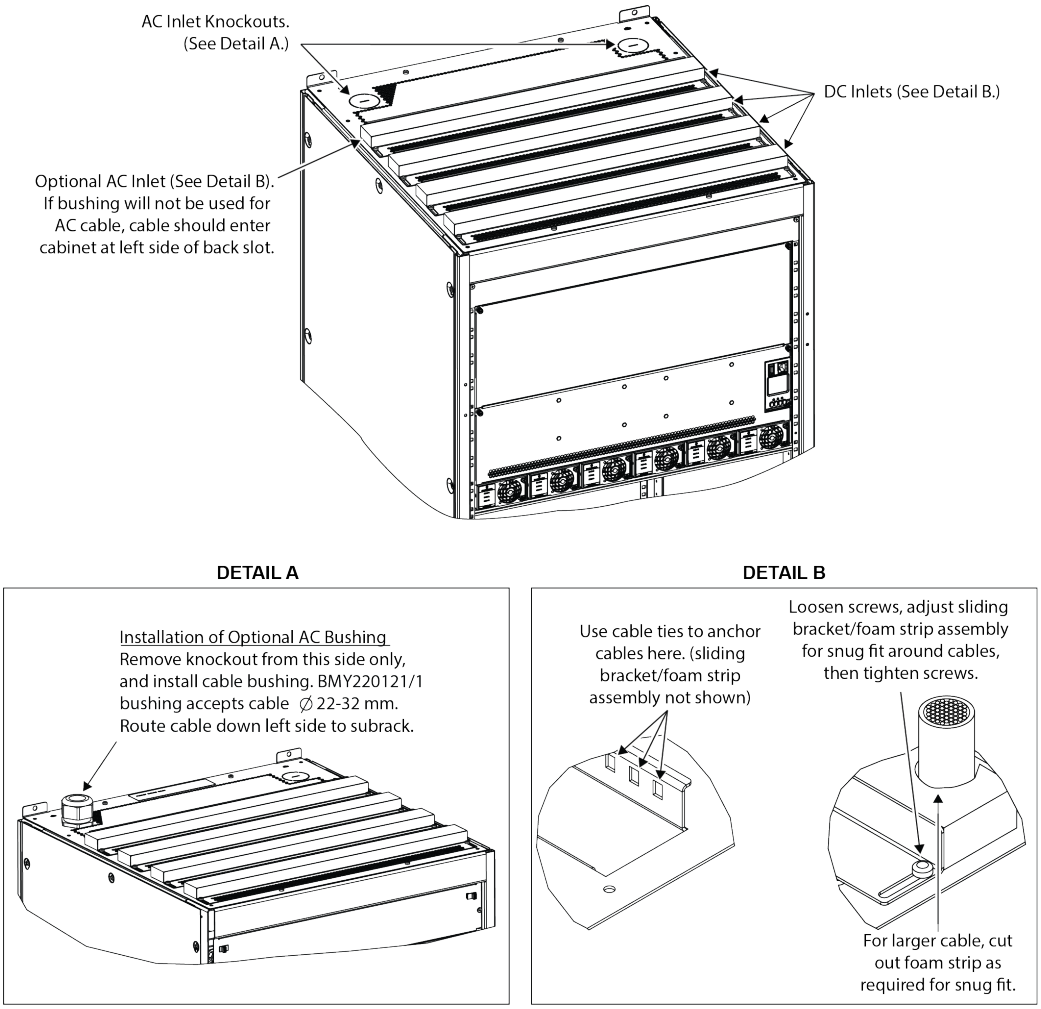

© 2026 Vertiv Group Corp. All Rights Reserved.

4.5 DC Solar and AC Mains Connections

DANGER! This system can operate from an AC input voltage capable of producing a fatal electrical shock. AC input power must be completely disconnected from the branch circuits' wiring used to provide power to the system before any AC electrical connections are made. Follow local lockout/tag out procedures to ensure upstream branch circuit breakers remain de-energized during installation. DO NOT apply AC input power to the system until all electrical connections have been completed and checked.

DANGER! This system can operate from a DC Input capable of causing harm. Exercise caution not to inadvertently contact or have any tool contact an input. Follow local lockout/tag out procedures to ensure upstream branch circuit breakers remain de-energized during installation

DANGER! Adhere to the “Important Safety Instructions” presented at the front of this document.

4.5.1 DC Solar Input

Based on the configuration, the DC solar input can be connected:

- Directly to the universal AC/DC Input termination strip placed at the back of the subrack. Refer to the power system/outdoor enclosure circuit diagram and/or Table 4.1 and Table 4.2 for AC/DC terminal connections.
- To the universal AC/DC terminal unit placed below the power system (available only for NetSure™ cabinet for options where more than twelve (12) modules of rectifiers and/or solar converters are required)
- To the optional Solar Input Shelves with PV SPD
- DC Input Connectors in M-Series cabinet, please refer to the outdoor enclosure instruction manual and circuit diagram

For DC solar input, the PE connection is not required in the input termination strip. For IEC compliance, a DC 2P PV circuit breaker 400 VDC and PV SPD with PE connection should be placed in line between the array and solar converter. Vertiv provides such a PV protection box, but the location of the protection resides with the local authority. As an alternative, up to two (2) solar input shelves with PV SPD are available as an option.

The maximum configuration of the universal AC/DC Input termination strip placed in the subrack rear supports up to twelve (12) modules, including rectifiers and/ or solar converters. If more than twelve (12) modules of rectifiers and/or solar converters are provided, unterminated wires are provided for the installer to connect these additional solar converters. The minimum terminals = wires size is 6 mm^2, but consider using 10 mm^2 for longer solar cable distances. The actual wire terminal size is the responsibility of the installation team. Wires and terminal sizes should be selected according to local regulations concerning voltage drop, operational temperature, and type of installation.

ALERT! Do not share one (1) solar array to two (2) or more S48-4300E4.
As each MPPT algorithm will fight for control of the share array at the expense of the others, rapid fluctuations of voltage and current will result and may cause damage.

© 2026 Vertiv Group Corp. All Rights Reserved.

4.5.2 AC Input

AC input is connected to the universal AC/DC Input termination strip. Refer to the circuit diagram and or Table 4.1 for connections when an AC circuit breaker IS NOT provided.

Table 4.1 AC Terminal Connection

Refer to the Circuit Diagram (BMK22302-01-CD) for additional information.

Shelf Type	Scheme
Individual AC Mains and DC Solar Input connection in Hybrid system One rectifier shelf 19” (3P and 2P bridges are enclosed in package)	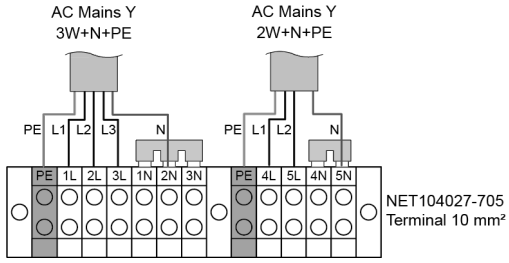
Individual AC Mains and DC Solar Input connection in Hybrid system One rectifier shelf 23” (3P bridge is enclosed in package)	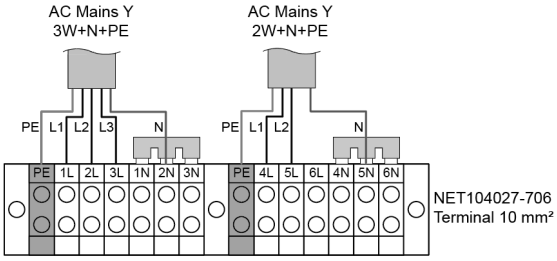
Individual AC Mains and DC Solar Input connection in Hybrid system Two rectifier shelves 19” (3P bridge is enclosed in package)	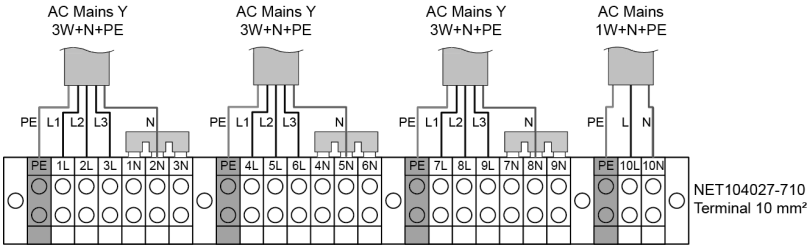
Individual AC Mains and DC Solar Input connection in Hybrid system Two rectifier shelves 23” (3P bridge is enclosed in package)	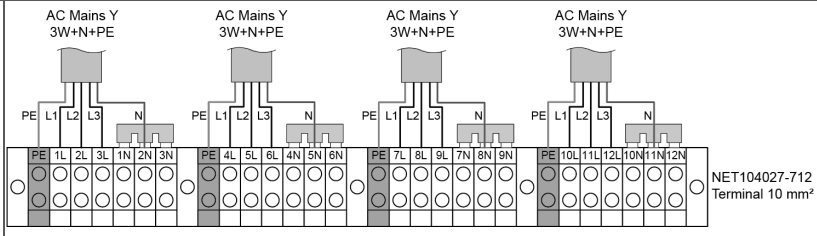

© 2026 Vertiv Group Corp. All Rights Reserved.

Table 4.2 Examples of AC Mains or DC Terminal Connections Options

Refer to the Circuit Diagram (BMK22302-01-CD) for additional information.

Connection	Scheme
3-phase AC feeding each rectifier shelf - Δ configuration (2P bridge is enclosed in package)	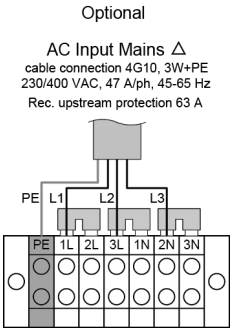
Individual DC Solar Input connection in 19" Hybrid system	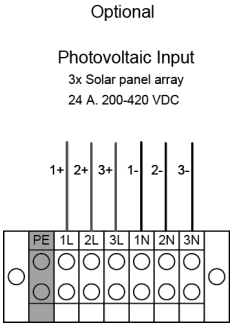
3W+N+PE, 2W+N+PE, 5x 2W AC feeding each rectifier and DC solar feeding	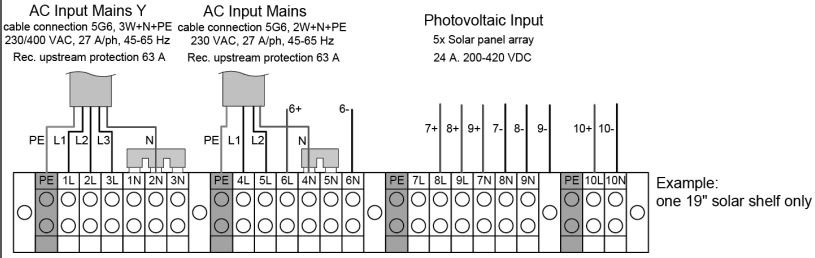

© 2026 Vertiv Group Corp. All Rights Reserved.

4.6 Load / Battery Branches Current Limits

Please refer to Table 4.3 for load / Battery branches current limits.

Based on the configuration, the following circuit breaker types are available:

- Thermal magnetic circuit breakers for maximum up to 55°C ambient temperature
- Hydraulic magnetic circuit breakers for maximum up to 65°C ambient temperature.

The side deranging of thermal magnetic circuit breakers must be considered according to the circuit breaker's specification. This means that a lower current must be applied to circuit breakers when multiple thermal magnetic breakers are placed adjacent to each other.

ALERT! The total current shall not exceed the rating of the system or a specific branch at a specific ambient temperature. As it is possible to place-generate more current given the configuration options, the load, battery, and independent DC Port must be configured by responsible personnel to never exceed the maximum current.

Table 4.3 Load / Battery Branches Current Limits

	System Capacity (kW @ 42 VDC)	Ambient (°C)	Max Total Output Rating (Load+Battery Charge) (A @ 42 VDC)	Max Dedicated Load Current (A)	Max Battery Charge Current (A)	Max LVD1 – 400 (A)	Max LVD1 – 200 (A)	Max LVD2 – 200 (A)	Max LVD3 – 200 (A)
NetSure™ 7100 Energy 500A	21	55	500	400	400	350	180	180	180
	16.8	65	400	300	300	300	150	150	150
	System Capacity (kW @ 42 VDC)	Ambient (°C)	Max Total Output Rating (Load+Battery Charge) (A @ 42 VDC)	Max Dedicated Load Current (A)	Max Battery Charge Current (A)	Max LVD1 – 400 (A)	Max LVD2 – 400 (A)	Max LVD3 – 200 (A)	
NetSure™ 7100 Energy 750A	31.5	55	750	600	650	350	350	180	
	25.2	65	600	450	500	300	300	150	
	System Capacity (kW @ 42 VDC)	Ambient (°C)	Max Total Output Rating (Load+Battery Charge) (A @ 42 VDC)	Max Dedicated Load Current (A)	Max Battery Charge Current (A)	Max LVD1 – 400 (A)	Max LVD2 – 400 (A)		
NetSure™ 7100 Energy 1000A	42	55	1000	700	800	350	350		
	33.6	65	800	600	650	300	300		

4.7 Wires Guidelines

Wires used for field connection shall have a minimum temperature rating of 90 °C. Consideration should also be taken to increase the wire cross-sectional area when exceeding 55 °C ambient temperature. For the wire size guidelines, see Table 4.4.

These are the minimum wire sizes to cool down the circuit breakers in a high-temperature environment, and these minimum sizes must be followed. Higher ambient temperatures require larger sizes of connection terminals. The proper size of connection terminals is provided based on the customer's maximum ambient temperature selections. The actual wire size is the responsibility of the installation team. Wires should be selected according to local regulations concerning voltage drop, operational temperature, and type of installation (open, covered, number of layers, parallel connection, etc.). The wire dimensions selection depends on the circuit breaker size, the ambient temperature, the tolerated cable voltage drop, and the distance between the power system and the load.

© 2026 Vertiv Group Corp. All Rights Reserved.

Table 4.4 Wire Size Guidelines, based on a minimum rating of 90°C

	Wire Size at Specific Ambient Temperature		
CB Rating	Ambient up to 40°C	Ambient up to 55°C	Ambient up to 65°C
32 A	6AWG (16 mm^2)	6AWG (16 mm^2)	6AWG (16 mm^2)
63 A	6AWG (16 mm^2)	6AWG (16 mm^2)	6AWG (16 mm^2)
80 A	6AWG (16 mm^2)	4AWG (25 mm^2)	4AWG (25 mm^2)
100 A	4AWG (25 mm^2)	2AWG (35 mm^2)	2AWG (35 mm^2)
125 A	2AWG (35 mm^2)	1AWG (50 mm^2)	1AWG (50 mm^2)
150 A	1AWG (50 mm^2)	1AWG (50 mm^2)	2/0AWG (70 mm^2)
200 A	2/0AWG (70 mm^2)	2x 1AWG (50 mm^2) / 1x 3/0AWG (95 mm^2)	2x 2/0AWG (70 mm^2)
300 A	2x 2/0AWG (70 mm^2)	2x 2/0AWG (70 mm^2)	2x 3/0AWG (95 mm^2)
400 A	3x 2/0AWG (70 mm^2)	3x 2/0AWG (70 mm^2) / 2x 3/0AWG (95 mm^2)	3x 3/0AWG (95 mm^2)

4.8 Load Connections

Loads are connected to the load distribution circuit breakers and neutral bar, as detailed in this section. Refer to Figure 4.3 and Figure 4.6.

Route load distribution wiring into the top of the subrack from the rear.

ALERT! Observe proper polarity when making load connections.

Procedure

1. Connect the positive (0 V) load return wire to the neutral bar.
2. Connect the negative (-48 V) load wire to the top terminal of a load circuit breaker.

© 2026 Vertiv Group Corp. All Rights Reserved.

Figure 4.3 NetSure™ 7100 MFU with 2 LVD and Independent DC Port

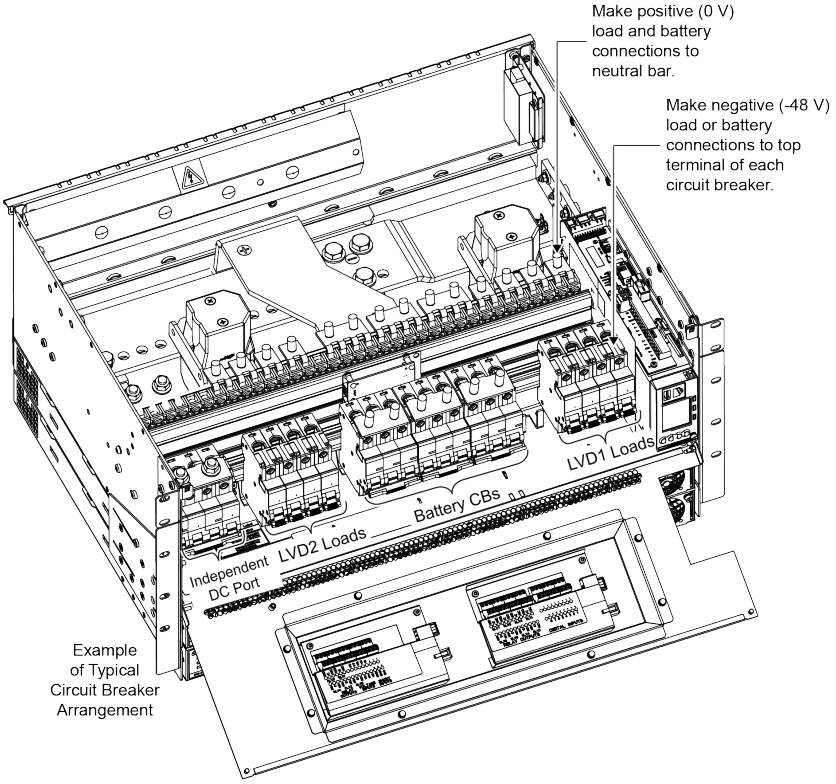

Figure 4.4 NetSure™ 7100 MFU and XDU with 2 LVD and Independent DC Port

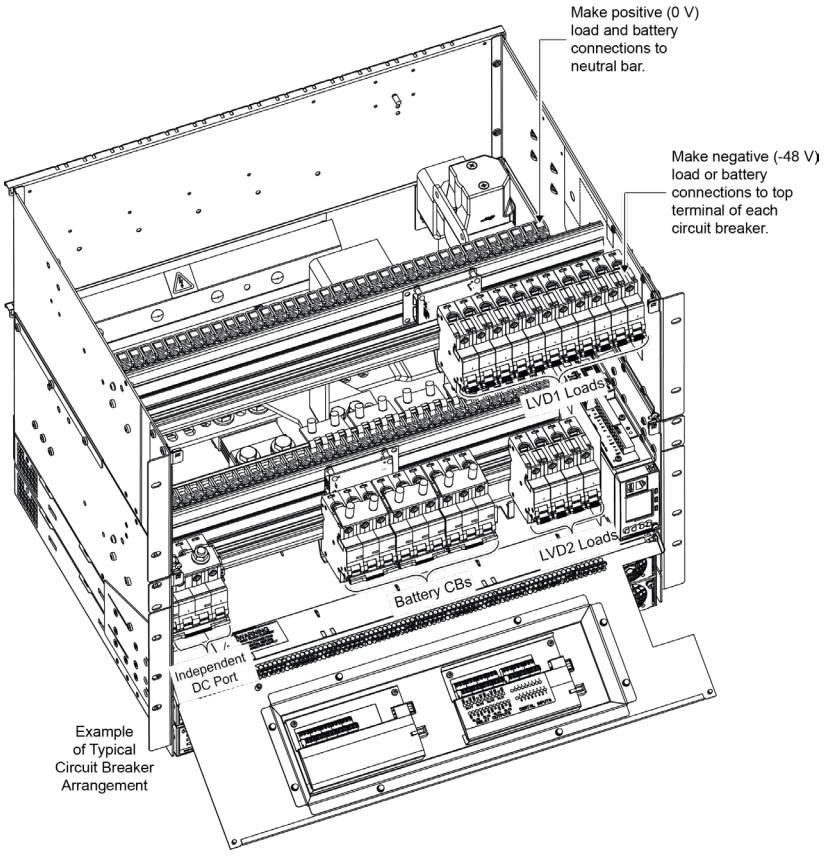

© 2026 Vertiv Group Corp. All Rights Reserved.

Figure 4.5 NetSure™ 7100 MFU with 3 LVD

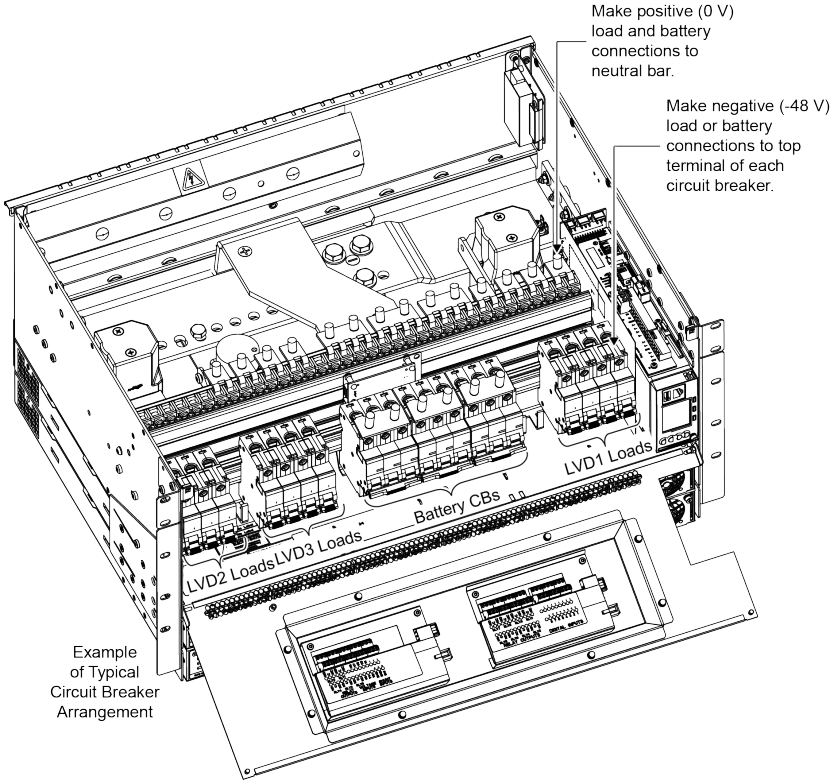

Figure 4.6 NetSure™ 7100 MFU and XDU with 3 LVD

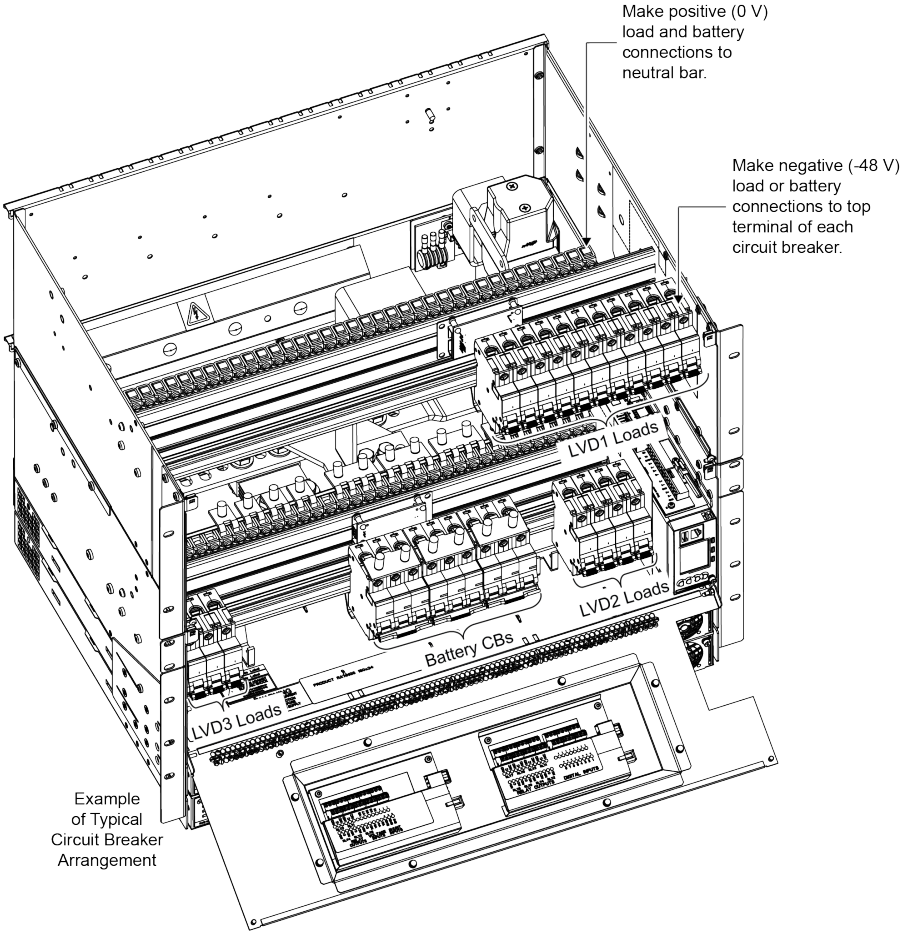

© 2026 Vertiv Group Corp. All Rights Reserved.

4.9 Battery Connections

4.9.1 Important Safety Instructions

DANGER! Adhere to the “Important Safety Instructions” presented at the front of this document.

ALERT! Observe proper polarity when making battery connections.

Batteries are connected to the battery circuit breaker(s) and neutral bar, as detailed in this section.

Procedure

1. Connect the positive (0 V) battery wire to the neutral bar.
2. Connect the negative (-48 V) battery wire to a battery circuit breaker.

4.10 Independent DC Power Port Connections

Important: The Independent DC Power Port is for well-behaved and clean DC Power Devices. The system monitors and reports on the ports' output, but does not regulate or limit a DC Power Device. It is the responsibility of the integrator to ensure the DC device is properly managed and set up to provide safe and controlled power for the application.

Based on the configuration, the following circuit breaker types are available:

- Thermal magnetic circuit breakers for maximum up to 55°C ambient temperature
- Hydraulic magnetic circuit breakers are maximum for up to 65°C ambient temperature.

ALERT! The total current shall not exceed the rating of the independent DC Power Port.

Table 4.5 Independent DC Power Port Connections

Independent DC Power Port			
Shunt with 80 A DC CB Available	Shunt with 200 A DC CB Available	Shunt with 300 A DC CB Available	Shunt with 400 A DC CB Available
64 A Max. at 55 °C	160 A Max. at 55 °C	240 A Max. at 55 °C	320 A Max. at 55 °C
56 A Max. at 65 °C	140 A Max. at 65 °C	210 A Max. at 65 °C	280 A Max. at 65 °C

A DC Input Breaker is provided for protection into the system, and the integrator is responsible for the wiring and if the breaker is suitable for safe and reliable operation.

ALERT! Ensure power from the Independent DC Power Source is OFF.

ALERT! Observe proper polarity when making load connections.

Procedure

1. Connect the positive (0 V) return wire to the neutral bar.
2. Connect the negative (-48 V) wire to the top terminal of the Independent DC Port circuit breaker.

© 2026 Vertiv Group Corp. All Rights Reserved.

4.11 External Alarm, Reference, Monitoring, and Control Connections

4.11.1 Connection Locations

Refer to Figure 4.7 for circuit board, temperature sensor connector, and connection kit locations.

Figure 4.7 Signal Connection Locations

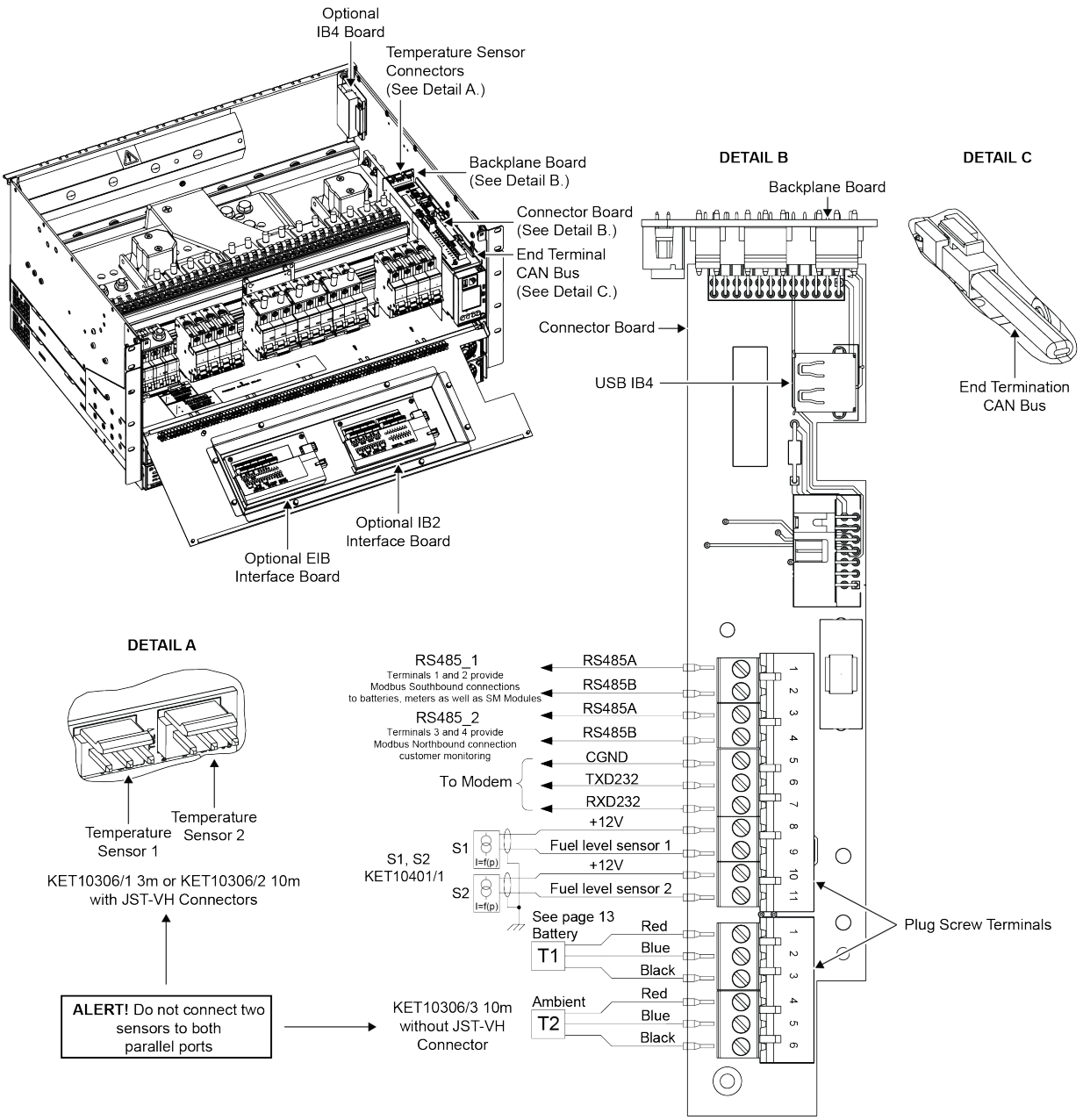

4.11.2 Connections to the CAN Bus, RS485_1, RS485_2, and RS232

Refer to Figure 4.7 for the connectors' location and terminal identification. Refer to the Circuit Diagram (BMK22302-01-CD) for additional information.

CAN Bus

CAN Bus extension is available in the front to connect to other Vertiv devices.

RS485_1 Bus

Terminals 1 and 2 provide Modbus Southbound connections to batteries, meters, and SM modules.

© 2026 Vertiv Group Corp. All Rights Reserved.

RS485_2 Bus

Terminals 3 and 4 provide Modbus Northbound connection for customer monitoring.

RS232 Bus

Terminals 3 and 4 provide connection points for a modem.

4.11.3 Connection of Fuel Level Sensors

Two optional fuel level sensors with a 5 m cable are available: KET10401/1. The sensors support tanks as deep as 2.5 m. To extend the length of the fuel level sensor, order the fuel sensor kit and the extension cable TFK492010/0, whose length can be chosen by the customer. The complete fuel sensor kit contains the junction box and the fuel level sensor.

1st fuel level sensor is connected to the plug screw terminals 8,9 and the 2nd fuel sensor to the plug screw terminals 10 and 11 of the connector board. Refer to Figure 4.7 for the connector location. For more information, see the circuit diagram (BMK22302-01-CD).

Refer to the NCU User Instructions (11KO7503JL) for programming information.

4.11.4 Temperature Sensors Connections

Two optional temperature sensors are available in standard configurations when batteries are installed in the same environment.

Two lengths are available, KET10306/1 with a 3 m long cable, and KET10306/2 with a 10 m long cable.

There are two ways to connect temperature sensors. Either through JST-VH connectors into the backplane board or through a plug screw terminal into the connector board. Refer to Figure 4.7 for connectors and or terminals location.

ALERT! Do not connect two sensors to both parallel ports.

The option with plug screw terminal connection is available for outdoor enclosure solutions, where the battery is located in another cabinet, box, etc., which can be routed through small cable inlets and grommets:

One length of this type is available. KET10306/3 for a 10 m sensor with a plug screw terminal connection.

It is possible to use up to six (6) temperature sensors for custom designs. Two (2) temperature sensors can be connected to the subrack JST-VH connectors/plug screw terminal, and two (2) temperature sensors can also be connected to the IB2 board J12/J11 and/or optional EIB board J3/J4.

- Up to two (2) temperature sensors can be connected to the subrack JST-VH connectors/plug screw terminal.
- Up to two (2) temperature sensors can be connected to the optional IB2 board.
- Up to two (2) temperature sensors can be connected to the optional EIB board.

A temperature sensor set as a battery sensor can also be designated to be used for the battery charge temperature compensation feature, or the battery charge temperature compensation feature can be programmed to use the average or highest value of all battery temperature sensors. The battery charge temperature compensation feature allows the controller to automatically increase or decrease the output voltage of the system to maintain battery float current as battery temperature decreases or increases, respectively. Battery life can be extended when an optimum charge voltage to the battery with respect to temperature is maintained. A temperature sensor set as a battery sensor can also be used for controlling against battery thermal runaway (BTRM feature). Refer to the NCU User Instructions (11KO7503JL) for programming information. Temperature compensation is typically used for lead-acid batteries. Actual set-points are defined by the battery manufacturer.

© 2026 Vertiv Group Corp. All Rights Reserved.

4.11.5 Optional IB4 Interface Board Connections

The IB4 board is a USB-to-LAN converter of NCU. It is installed inside the power system cabinet and outside of the NCU. It connects to the controller via USB cables. There are three connectors: J1, J2, and J3.

Description of the connectors:

- J1 – USB A connector (for customer)
- J2 – ETHERNET connector (for customer)
- J3 – USB B connector (from NCU)

Figure 4.8 Optional IB4 Interface Board Connections

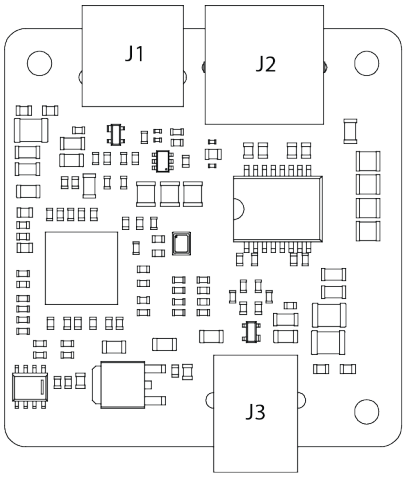

4.11.6 Optional IB2 Interface Board Connections

The optional IB2 board provides connection points for digital inputs, programmable relay outputs, and temperature sensors. Refer to Figure 4.9. Route signaling wiring into the top of the subrack from the rear. The cables must be long enough for connection to the IB2 board when the subrack front door is open.

Procedure

Digital Inputs and Relay Outputs: Digital input and relay output leads are connected to screw-type terminal blocks located on the IB2 board. Recommended torque for these connections is 0.249 Nm (2.2 in-lbs.).

a) **Digital Inputs:** Connect up to eight (8) digital inputs to the IB2 board. Note that you must supply both paths for the digital input (either a positive or a negative signal and the opposite polarity return path). Observe proper polarity. The digital inputs can be programmed to provide an alarm when the signal is applied (HIGH) or removed (LOW). Refer to the NCU User Instructions (11KO7503JL) for programming information.

b) **Programmable Relay Outputs:** The IB2 board provides eight programmable alarm relays with Form-C contacts. Each relay is user-configurable for alarm conditions. **Contacts have a maximum rating of 60 W: 2 A @ 30 VDC or 1 A @ 60 VDC.**

© 2026 Vertiv Group Corp. All Rights Reserved.

Figure 4.9 Optional IB2 Interface Boards Connections

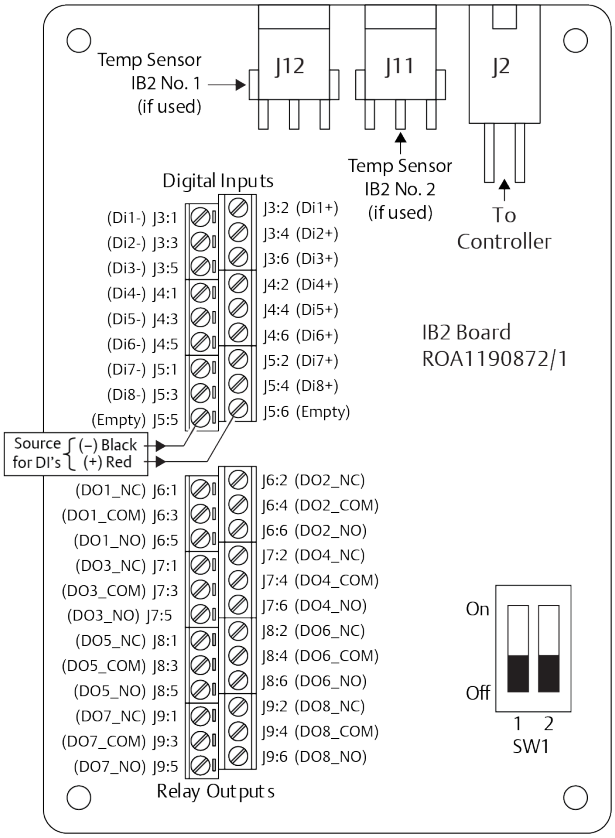

4.11.7 Optional EIB Interface Board Connections

The optional EIB board provides additional connection points for voltage and current inputs, programmable relay outputs, and additional temperature sensors. Refer to Figure 4.9. Route signaling wiring into the top of the subrack from the rear. The cables must be long enough for connection to the EIB board when the subrack door is open.

Procedure

Voltage Inputs, Current Inputs, and Programmable Relay Outputs: Voltage input, current input, and relay output leads are connected to screw-type terminal blocks located on the EIB board. Recommended torque for these connections is 0.22 N-m (2.0 in.-lbs.).

a) **Current Inputs:** Connect up to three (3) shunt inputs to the EIB board. Observe proper polarity. Refer to Table 4.6 to determine which shunt input to connect to on the EIB board. Refer to the NCU User Instructions (11KO7503JL) and program the shunt input parameters.

Table 4.6 NCU RJ-45 Ethernet Port Pin Configuration

Number of Battery Shunts	Number of Load Shunts	Connect to EIB Shunt Inputs as Follows
1	0	Shunt 1 – Battery 1 Shunt 2 – none Shunt 3 – none
2	0	Shunt 1 – Battery 1 Shunt 2 – Battery 2 Shunt 3 – none
3	0	Shunt 1 – Battery 1 Shunt 2 – Battery 2 Shunt 3 – Battery 3
0	1	Shunt 1 – none Shunt 2 – none Shunt 3 – Load 1

© 2026 Vertiv Group Corp. All Rights Reserved.

Number of Battery Shunts	Number of Load Shunts	Connect to EIB Shunt Inputs as Follows
0	2	Shunt 1 – none Shunt 2 – Load 2 Shunt 3 – Load 1
0	3	Shunt 1 – Load 3 Shunt 2 – Load 2 Shunt 3 – Load 1
1	1	Shunt 1 – Battery 1 Shunt 2 – none Shunt 3 – Load 1
2	1	Shunt 1 – Battery 1 Shunt 2 – Battery 2 Shunt 3 – Load 1
1	2	Shunt 1 – Battery 1 Shunt 2 – Load 2 Shunt 3 – Load 1

b) **Voltage Inputs for Battery Block and Battery Midpoint Monitoring:** The NCU Controller can monitor battery blocks (12 V blocks) or midpoint battery voltage of battery strings connected to the EIB assembly. The EIB assembly provides a total of eight (8) DC voltage inputs for these connections. An alarm is issued when either battery block voltage or battery midpoint voltage is abnormal.

Refer to Figure 4.9 for connection details. Refer to the NCU User Instructions (11KO7503JL) and program the following parameters found in the EIB menu.

- Battery Block Monitoring

Voltage Type: Set to “48 (Block 4)”. This selects the EIB to monitor up to four (4) 48 V battery strings with four (4) 12 V blocks per string.

BlockVDiff(12V): This menu item appears if “48 (Block 4)” is selected above. Set the alarm threshold for battery block monitoring per site requirements. The Controller issues an alarm when any block voltage of any battery string has an abnormal value. The alarm is issued when the difference between any block voltage and a reference voltage is greater than the value of the block voltage difference setting.

Block In-Use: Set to the number of 12 V battery blocks being used.

- Midpoint Monitoring

Voltage Type: Set to “Midpoint”. This selects the EIB to monitor the midpoint voltage of up to eight (8) battery strings.

BlockVDiff(Mid): This menu item appears if “Midpoint” is selected above. Set the alarm threshold for battery midpoint monitoring per site requirements. The NCU Controller issues an alarm when any battery midpoint voltage of any battery string has an abnormal value. The alarm is issued when the difference between any battery midpoint voltage and a reference voltage is greater than the value of the block voltage difference setting.

Block In-Use: Set to the number of 12 V battery blocks being used.

c) **Programmable Relay Outputs:** The EIB board provides five programmable alarm relays with Form-C contacts. Contacts have a maximum rating of 60 W: 2 A @ 30 VDC or 1 A @ 60 VDC.

NOTE! *The relays energize during an alarm condition, closing the contacts between the C and NO terminals, and opening the contacts between the C and NC terminals.*

The default NCU Controller configuration programs these relays as follows. Refer to the NCU User Instructions (11KO7503JL) for programming information. Refer to the Table of Set Values (11QF2335LA) for your system’s specific configuration.

d) **Temperature Sensors:** Temperature sensors can be connected to the optional EIB board. Refer to “Temperature Sensors Connections” for more information.

© 2026 Vertiv Group Corp. All Rights Reserved.

Figure 4.10 Optional EIB Interface Boards Connections

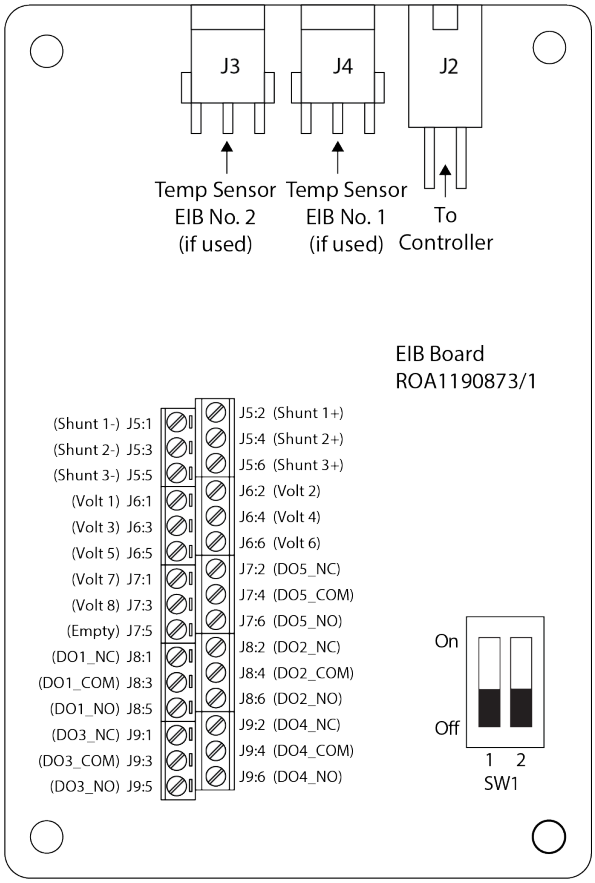

Figure 4.11 Sample Battery Block or Battery Midpoint Monitoring Connections

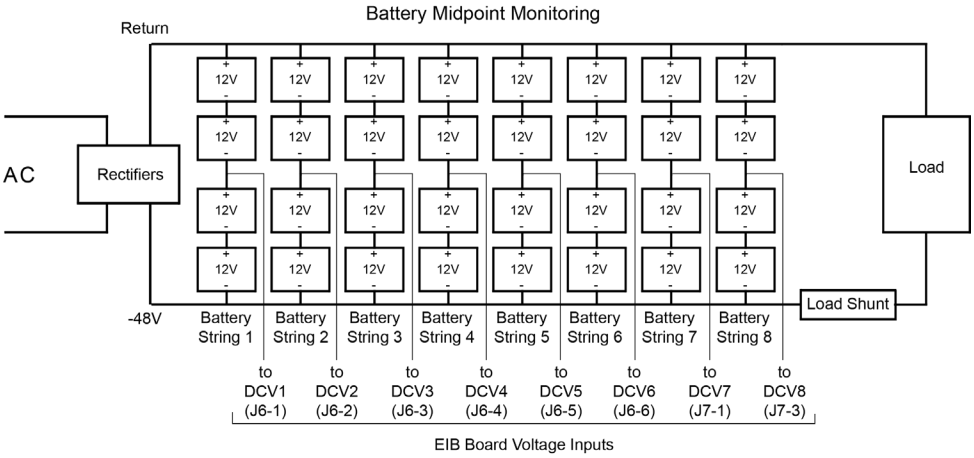

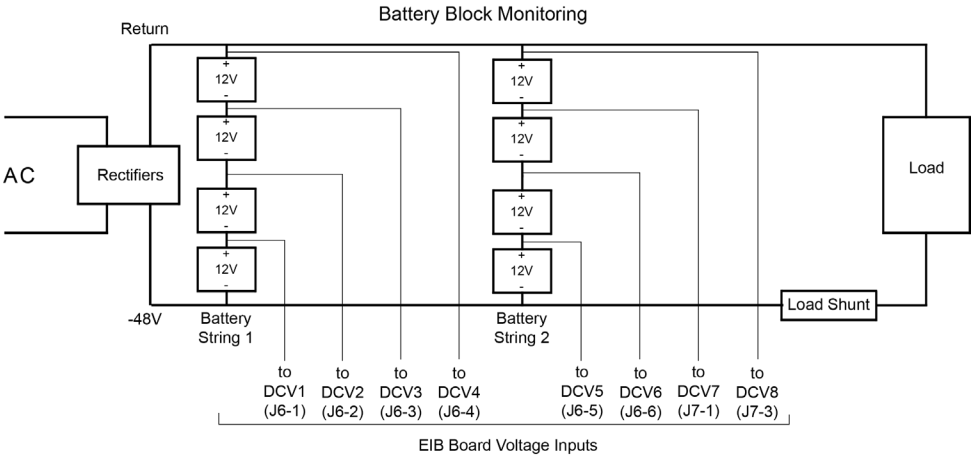

© 2026 Vertiv Group Corp. All Rights Reserved.

4.12 Ethernet Connection to the NCU (if required)

NOTE! *If the Web Interface is not being used with this system, skip this procedure.*

The NCU Controller provides a Web Interface via an Ethernet connection to a TCP/IP network. An RJ-45 10BaseT jack is provided on the front of the NCU for connection into a customer's network running TCP/IP. This jack has a standard Ethernet pin configuration scheme, twisted pair. Refer to Figure 4.12 for location and Table 4.6 for pin outs. Use a shielded Ethernet cable (grounded at both ends). Note that the NCU RJ-45 jack is connected to chassis ground. Refer to the NCU User Instructions (11KO7503JL) for operational details.

NOTE! *A second Ethernet connection jack is provided on the optional IB4 board. Refer to Figure 4.7 for the IB4 board location. Refer to the NCU Controller User Instructions (11KO7503JL) for further information.*

NOTE! *You can access the Web pages of the power system locally by using a "crossover" or "straight" cable connected directly between your PC and the controller.*

WARNING! The intra-building port(s) of the equipment or subassembly is suitable for connection to intra-building or unexposed wiring or cabling only. The intra-building port(s) of the equipment or subassembly MUST NOT be metallically connected to the interfaces that connect to the OSP or its wiring. These interfaces are designed for use as intra-building interfaces only (Type 2 or Type 4 ports as described in GR-1089-CORE, Issue 4) and require isolation from the exposed OSP cabling. The addition of Primary Protectors is not sufficient protection for connecting these interfaces metallically to OSP wiring.

The intra-building port (RJ-45) of the equipment or subassembly must use shielded intra-building cabling (wiring) that is grounded at both ends.

Figure 4.12 NCU Ethernet Port

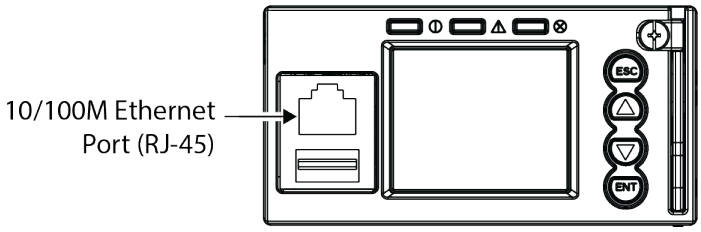

Table 4.7 NCU RJ-45 Ethernet Port Pin Configuration

Port Pin Number	Name	Definition
1	Tx+	Send Signal +
2	Tx-	Send Signal -
3	Rx+	Receive Signal +
4	--	no connection
5	--	no connection
6	Rx-	Receive Signal -
7	--	no connection
8	--	no connection

© 2026 Vertiv Group Corp. All Rights Reserved.

5 Initially Starting and Checking the System

For the start-up of the system, see the document Installation Test Instructions (10183329).

6 Operating Procedures

6.1 Controllers, Rectifiers, and Converters

For operation instructions on these units, refer to the following documents:

- NCU Controller User Instructions (11KO7503JL)
- R48-4300E3 Rectifier User Instructions (1R484300E3UM)
- S48-4300E4 Solar Converter User Instructions (1S484300E4-User Manual)

6.2 Independent DC Power Port

Refer to the operation manuals provided with the DC Power Devices and the integrator's operating instructions.

6.3 Local Controls and Indicators

Refer to the NCU and Rectifier/Converter User Instructions for descriptions of the local controls and indicators located on these units.

6.4 Batteries

Refer to the operation manuals provided with the Batteries and the integrator's operating instructions.

© 2026 Vertiv Group Corp. All Rights Reserved.

7 Maintenance

7.1 System Maintenance Procedures

It is recommended that the maintenance procedures listed in Table 7.1 be performed every 6 months to ensure continual system operation.

Table 7.1 Maintenance Procedures

Procedure	Referenced In	Completed (√)
Check ventilation openings for obstructions such as dust, papers, manuals, etc.	--	
Inspect and tighten all installers' connections	Making Electrical Connections section of this document.	
NOTE! *This table may be reproduced as necessary to record and document system performance.*		

7.2 Adding a Rectifier/Converter Module to the System

To increase system current capacity, a rectifier module can easily be added to a subrack that contains an empty rectifier module mounting position.

For rectifier module installation instructions, refer to the Rectifier Instructions (1R484300E3UM).

For converter module installation instructions, refer to the Solar Converter Instructions (1S484300E4-User Manual). Refer also to the following.

It is recommended that the current limit point and battery wire-breaker wire sizing be checked whenever a rectifier/converter module is added to or removed from the power system. Refer to the NCU User Instructions (11KO7503JL) for a procedure to change limits.

The rectifier/converter module being added is assigned by the NCU the lowest available identification number. If desired, you can change the identification number. Refer to the NCU User Instructions (11KO7503JL) for a procedure.

7.3 Adding a Load Distribution or Battery Disconnect Circuit Breaker

A load distribution or battery disconnect circuit breaker can easily be added to a subrack that contains an empty circuit breaker mounting position with pre-mounted negative forks.

Refer to the label located beneath the circuit breakers on the subrack floor to see if additional space is available for a battery or the required LVD. Refer to Figure 7.1 for the LVD Labels and Battery Label. Refer to Figure 7.2 for a procedure.

Figure 7.1 LVD Labels and Battery Label

LVD1 > LVD2 >

LVD3 > BAT >

© 2026 Vertiv Group Corp. All Rights Reserved.

Figure 7.2 Adding a Load Distribution or Battery Disconnect Circuit Breaker

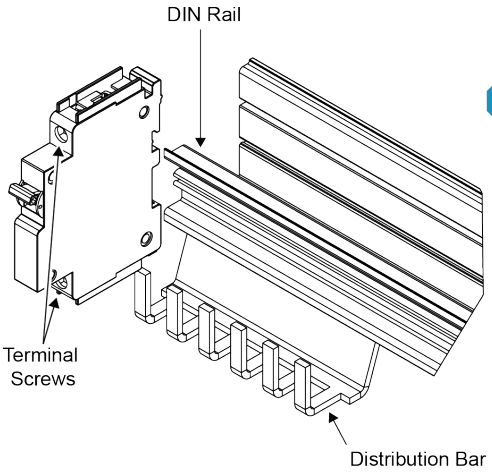

CB Installed on DIN Rail

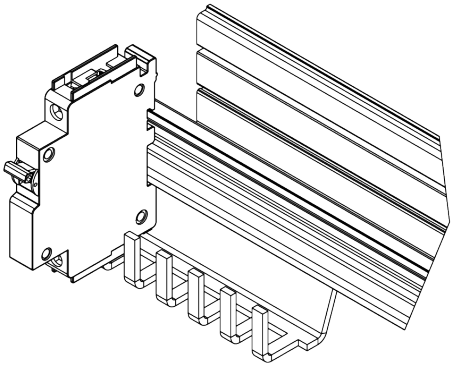

NOTE! *A tool with an offset shank is available as an optional item from Vertiv. This tool simplifies operating the circuit breaker lock. To order, specify product number LSY10822.*

DANGER! If the power system is in service, hazardous voltage and energy are present inside the subrack. External wiring (especially from the battery) may be energized from an external source. DO NOT allow bare wire ends to contact any grounded or energized object during this procedure. Use only insulated tools. Read “Important Safety Instructions” at the beginning of this document before performing this procedure.

ALERT! Observe correct polarity (+ to + and - to -) when making battery or load connections

1. TURN OFF the circuit breaker being added and loosen the circuit breaker terminal screws to their maximum extent.

2. Pull down on the lock at the back of the circuit breaker and mount the circuit breaker on the DIN rail. Push the circuit breaker against the DIN rail until the lock engages. If there is no spring locking, push the lock up with the tool. (See NOTE).
(Read the next steps first if a top connection fork is to be used/mounted on the circuit breaker or on the neutral (0 V) bar).

3. For battery circuit breakers only:
If optional reverse polarity alarm board IS NOT present: Locate an unused battery circuit breaker alarm wire termination. Remove the shrink tubing from the alarm wire termination. Insert the wire into the top terminal cavity of the battery circuit breaker. The terminal screw will be tightened later.
If optional reverse polarity alarm board IS present: Locate an unused battery circuit breaker reverse polarity alarm wire. Remove the shrink tubing from the alarm wire termination. Insert the wire into the top terminal cavity of the battery circuit breaker. The terminal screw will be tightened later.

   For load circuit breakers only:
Locate an unused load circuit breaker alarm wire. Remove the shrink tubing from the alarm wire termination. Insert the wire into the top terminal cavity of the load circuit breaker. The terminal screw will be tightened later.

4. Install the positive (0 V) battery and/or load wire(s) to the subrack neutral (0 V) bar. DO NOT tighten wire(s) when a top connection fork is to be used/mounted on the neutral (0 V) bar! The wires must first be pre-installed and tightened on the top connection forks "outside the system", and then the wires with pre-installed top connection forks can be installed onto the neutral (0 V) bar.

5. Install the negative (-48 V) battery and/or load wire(s). Insert the wire(s) into the top terminal cavity of the circuit breaker. (Ensure that the alarm wire is also inserted - this applies to the load distribution/battery circuit breaker. This does not apply to Independent DC Port circuit breakers):
DO NOT tighten wire(s) when a top connection fork is to be used/mounted on the circuit breaker! The wires must first be pre-installed and tightened on the top connection forks "outside the system ", and then the wires with pre-installed top connection forks can be installed onto the circuit breaker.

6. Tighten circuit breaker terminal screws.

7. TURN ON the circuit breaker.

© 2026 Vertiv Group Corp. All Rights Reserved.

8 Troubleshooting and Repair

8.1 Controllers and Rectifiers

For troubleshooting and repair instructions on these units, refer to the following documents:

- NCU (NetSure™ Control Unit) User Instructions (11KO7503JL)
- R48-4300E3 Rectifier User Instructions (1R484300E3UM)
- S48-4300E4 Solar Converter User Instructions (1S484300E4-User Manual)

8.2 NCU Controller Configuration

If you modified any NCU Controller configuration settings, refer to the NCU User Instructions (11KO7503JL) and save a copy of the configuration file. This file can be used to restore the NCU Controller settings, if needed in the future.

8.3 System Troubleshooting Information

This system is designed for ease in troubleshooting and repair. The various indicators as described in the section entitled Operating Procedures and, in the Controller, and Rectifier User Instructions are designed to isolate failure to a specific element. After identifying a faulty component, refer to the "Replacement Information" and "Replacement Procedures" sections in this chapter.

8.3.1 Troubleshooting Alarm Conditions on the NCU Controller

The NCU Controller displays alarm conditions as listed in the Available Alarms section of the NCU User Instructions (11KO7503JL). Programmable external alarm relays are also available. Refer to the “Table of Set Values” supplied with your power system documentation for your alarm relay configurations.

The NCU’s Active Alarm and Alarm History submenus allow the User to view alarm details. Refer to the NCU User Instructions (11KO7503JL) to access these menus.

8.3.2 Checking the NCU Current Limit Point after Adding or Removing a Rectifier/Converter

If a rectifier/converter is added to the power system, the system current limit point will automatically increase by the percentage each existing rectifier was set to provide prior to the addition.

If a rectifier/converter is removed from the system (and the “Rect. Comm Fail”/ “Conv Comm Fail” alarm is reset), the current limit point will remain unchanged unless the capacity of the remaining rectifiers is not sufficient to maintain the present current limit point. If that happens, the current limit point will automatically increase to the maximum (121% of the remaining rectifiers).

It is recommended that the current limit point be checked whenever a rectifier is added to or removed from the power system. Refer to the NCU User Instructions (11KO7503JL) for a procedure.

8.3.3 Clearing a Rectifier/Converter Communications Fail Alarm after Removing a Rectifier/Converter

If a rectifier/converter module is removed from the system, a rectifier/solar converter communications failure alarm is generated. If you are not replacing the module, clear the alarm. For alarm clearance procedures, refer to the NCU User Instructions (11KO7503JL).

8.3.4 Clearing a Rectifier/Converter Lost Alarm

If the NCU Controller resets while the rectifier/converter communications fail alarm is active, the rectifier/converter communications fail alarm is replaced with a rectifier/converter lost alarm. For alarm clearance procedures, refer to the NCU User Instructions (11KO7503JL).

© 2026 Vertiv Group Corp. All Rights Reserved.

NOTE! *In a hybrid system, when power to the rectifier and solar converter is turned off, to conserve energy, the NCU will recognize that the devices are no longer communicating and may generate an Observational Alarm.*

8.4 Replacement Information

8.4.1 Replacement Assemblies

When a trouble symptom is localized to a faulty rectifier module, controller, or system circuit board, that particular device or circuit board should be replaced in its entirety. Other than a rectifier module fan replacement, no attempt should be made to troubleshoot or repair individual components on any rectifier/solar module, controller, or circuit board.

8.5 Replacement Procedures

DANGER! Adhere to the “Important Safety Instructions” presented at the beginning of this document.

8.5.1 Rectifier Module Replacement

For rectifier module replacement procedures, refer to the Rectifier User Instructions (1R484300E3UM).

The replacement rectifier module is automatically assigned the lowest available identification number by the NCU. To modify this number, refer to the NCU User Instructions (11KO7503JL).

8.5.2 Solar Converter Module Replacement

For solar converter module replacement procedures, refer to the Solar Converter User Instructions (1S484300E4-User Manual).

The replacement converter module is automatically assigned the lowest available identification number by the NCU. To modify this number, refer to the NCU User Instructions (11KO7503JL).

8.5.3 NCU Controller Replacement

Refer to the NCU User Instructions (11KO7503JL) for a controller replacement procedure.

8.5.4 Load Distribution or Battery Disconnect Circuit Breakers Replacement

Refer to Figure 8.1 for a procedure.

© 2026 Vertiv Group Corp. All Rights Reserved.

Figure 8.1 Load Distribution or Battery Disconnect Circuit Breaker Replacement

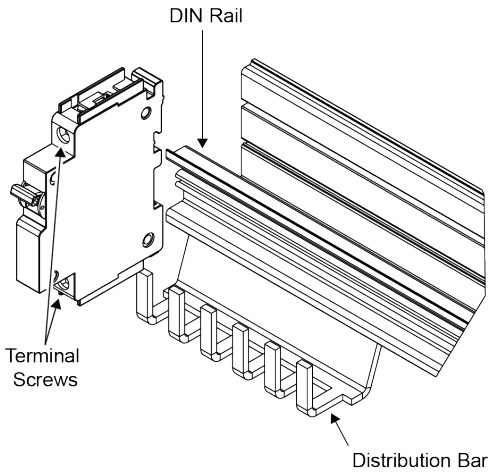

CB Installed on DIN Rail

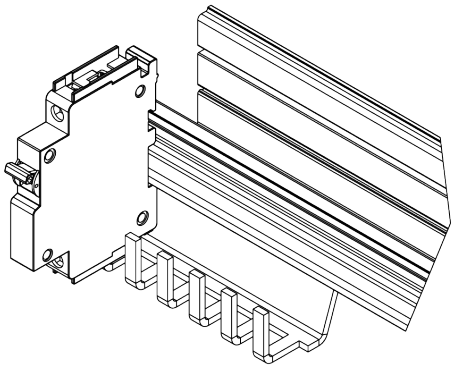

NOTE! *A tool with an offset shank is available as an optional item from Vertiv. This tool simplifies operating the circuit breaker lock. To order, specify product number LSY10822.*

DANGER! If the power system is in service, hazardous voltage and energy are present inside the subrack. External wiring (especially from the battery) may be energized from an external source. DO NOT allow bare wire ends to contact any grounded or energized object during this procedure. Use only insulated tools. Read “Important Safety Instructions” at the beginning of this document before performing this procedure.

ALERT! Observe correct polarity (+ to + and - to -) when making battery or load connections

1. TURN OFF the circuit breaker being replaced.
2. Loosen the circuit breaker terminal screws to their maximum extent.
3. Remove wiring from the top terminal of the circuit breaker. If the top connection fork is installed on the top terminal of the circuit breaker, remove the top connection fork from the circuit breaker first! DO NOT loosen the wiring mounted on the top connection fork while the fork is installed on the circuit breaker! Use extreme caution not to allow wire ends to contact any energized or grounded object.
4. Pull down the lock at the back of the circuit breaker to unlock it from the DIN rail (See NOTE.) and remove the circuit breaker.
5. TURN OFF the replacement circuit breaker.
6. Loosen the terminal screws to their maximum extent on the replacement circuit breaker.
7. Pull down on the lock at the back of the circuit breaker and mount the circuit breaker on the DIN rail. Push the circuit breaker against the DIN rail until the lock engages. If there is no spring locking, push the lock up with the tool. (See NOTE.) (Read the next step first if a top connection fork is to be used/mounted on the circuit breaker or on the 0 V bar.)
8. Insert the wire(s) into the top terminal cavity of the circuit breaker. (Ensure that the alarm wire is also inserted - this applies to the load distribution/battery circuit breaker. This does not apply to Independent DC Port circuit breakers.)
   DO NOT tighten wire(s) when a top connection fork is to be used/mounted on the circuit breaker or on the neutral (0 V) bar! The wires must first be pre-installed and tightened on the top connection forks "outside the system ", and then the wires with pre-installed top connection forks can be installed onto the circuit breaker or onto the neutral (0 V)bar.
9. Tighten circuit breaker terminal screws.
10. TURN ON the circuit breaker.

© 2026 Vertiv Group Corp. All Rights Reserved.

8.5.5 PV Input Circuit Breaker and PV SPD Replacement

Refer to Figure 8.2 for a procedure.

Figure 8.2 PV Input Circuit Breaker and PV SPD Replacement

Circuit Breaker Replacement

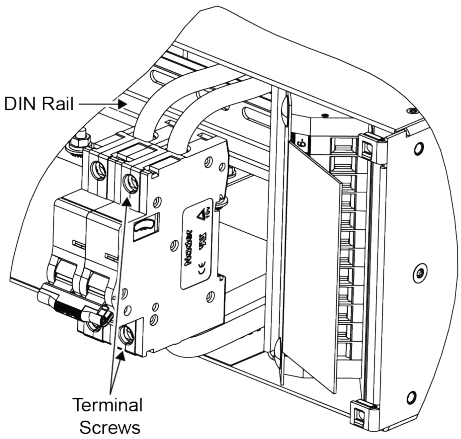

DANGER! Do not replace circuit breakers while external wires from solar panels energize the system. Use only insulated tools. Read "Important Safety Instructions" at the beginning of this document before performing this procedure.

ALERT! Observe correct polarity (+ to + and - to -) when making load connections

1. TURN OFF the circuit breaker being replaced.
2. Disconnect the solar panels to ensure no voltage is present in the wiring.
3. Pull down the lock at the back of the circuit breaker (see NOTE). Remove the circuit breaker from the DIN rail.
4. Loosen the terminal bolts and disconnect all attached wires.
5. Loosen the terminal bolts to their maximum extent on the replacement circuit breaker. Pull down the lock. TURN OFF the circuit breaker.
6. Insert each wire into the appropriate terminal cavity and tighten the screws securely. Gently pull each wire to verify it is firmly held in place.
7. Mount the circuit breaker onto the DIN rail and push the locking tab up to secure it.
8. TURN ON the circuit breaker.

NOTE! *A tool with an offset shank is available as an optional item from Vertiv. This tool simplifies operating the circuit breaker lock. To order, specify product number LSY10822.*

PV SPD Replacement

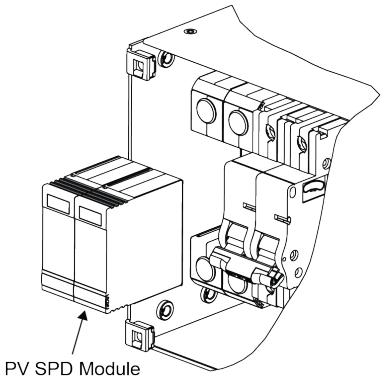

1. Remove the PV SPD modules and install new ones.

8.5.6 Circuit Board Replacement Procedures

DANGER! Circuit boards used in this power system contain static-sensitive devices. Read the Static Warning at the beginning of this document before performing any of the following procedures.

ALERT! When performing any step in these procedures that requires the removal or installation of hardware, use caution to ensure no hardware is dropped and left inside the cabinet; otherwise, service interruption or equipment damage may occur.

NOTE! *When performing any step in these procedures that requires the removal of existing hardware, retain all hardware for use in subsequent steps.*

© 2026 Vertiv Group Corp. All Rights Reserved.

8.5.7 Load Circuit Breaker Alarm Board Replacement

The load circuit breaker alarm board is mounted on a plate attached to the circuit breaker's support rail. To replace the board, follow the procedure below and refer to Figure 8.3.

Procedure

DANGER! The following steps expose service personnel to battery and/or independent DC port potential. Exercise extreme caution not to inadvertently contact or have any tool contact any energized electrical termination. DO NOT allow bare wire ends to contact any grounded or energized object during this procedure. Use only insulated tools. Read the Important Safety Instructions at the beginning of this document before performing this procedure.

ALERT! Failure to follow the next step may result in damage to the circuit board.

1. Connect an approved grounding strap to your wrist. Attach the other end to a suitable ground.
2. Open the subrack front and/or top cover.
3. Remove input power from the power system by opening all external protective or disconnect devices.
4. Turn OFF all batteries and/or independent DC port disconnect circuit breakers in the power system.
5. To reach the alarm board, the procedure may require the uninstallation of the load, battery, and/or independent DC port wires. Independent DC port and or Battery voltage remain present on the top terminals of the circuit breakers when batteries and/or independent PD port are connected. Uninstall battery and or independent DC port wires (or load wires if required) and carefully insulate the ends of the wires with non-conductive insulation.
6. Locate the mounting plate, which is secured to the circuit breaker's support rail profile with one screw through a keyhole.
7. Loosen the screw and slide the mounting plate with the board either to the right or left, then lift it out of the assembly.
8. Disconnect all wire harnesses from the board.
9. Install the replacement board on the mounting plate.
10. Reconnect all wire harnesses and slide the assembly back in position, and tighten the mounting screw.
11. Reconnect load and/or battery wires
12. Turn ON all batteries and/or independent DC port disconnect circuit breakers in the power system.
13. Restore input power by closing all external protective or disconnect devices.
14. Close the subrack front and/or top cover.
15. Remove the grounding wrist strap.
16. Verify that no alarms are present.

© 2026 Vertiv Group Corp. All Rights Reserved.

Figure 8.3 Load CB Alarm Board Replacement

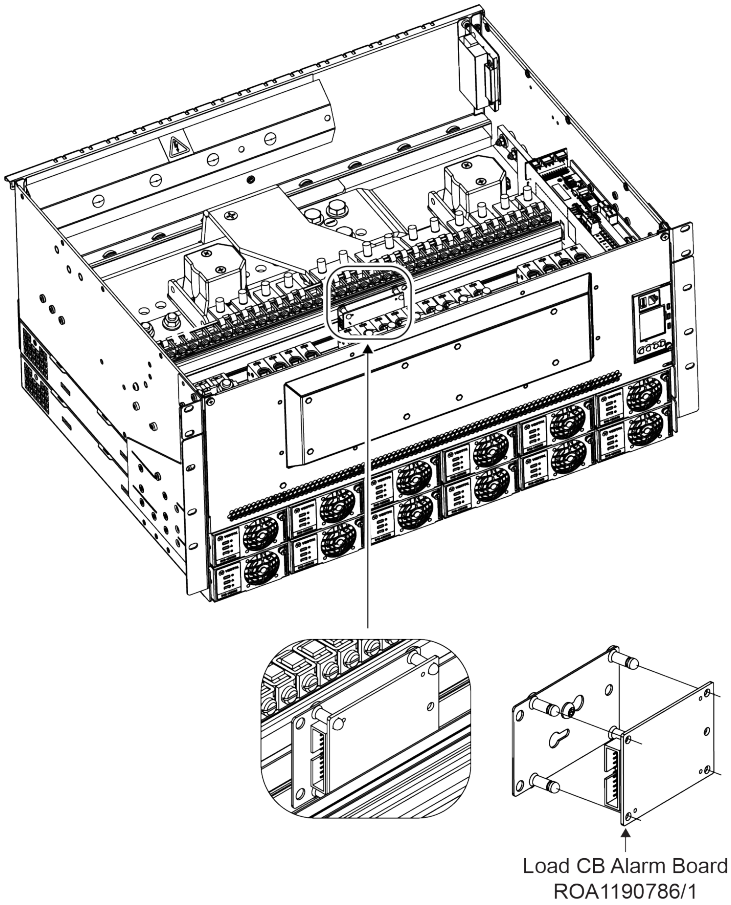

8.5.8 Optional -48 V DC SPD Board Replacement

The -48 V DC SPD board is mounted on a plate in the upper-right rear position of the power system. To replace the board, follow the procedure below and refer to Figure 8.4.

Procedure

DANGER! The following steps expose service personnel to battery and/or independent DC port potential. Exercise extreme caution not to inadvertently contact or have any tool contact any energized electrical termination. DO NOT allow bare wire ends to contact any grounded or energized object during this procedure. Use only insulated tools. Read the Important Safety Instructions at the beginning of this document before performing this procedure.

ALERT! Failure to follow the next step may result in damage to the circuit board.

Procedure

1. Connect and approve the grounding strap to your wrist. Attach the other end to a suitable ground.
2. Open the subrack front and/or top cover.
3. Remove input power from the power system by opening all external protective or disconnect devices.
4. Turn OFF all batteries and/or independent DC port disconnect circuit breakers in the power system.

© 2026 Vertiv Group Corp. All Rights Reserved.

5. To reach the -48 V DC SPD board, the procedure may require the uninstallation of the load, battery, and/or independent DC port wires. Independent DC port and or Battery voltage remain present on the top terminals of the circuit breakers when batteries and/or independent PD port are connected. Uninstall battery and/or independent DC port wires (or load wires if required) and carefully insulate the ends of the wires with non-conductive insulation.
6. The board and bracket are mounted with one screw through a keyhole in the mounting plate. Loosen the screw, lift up, and remove the assembly.
7. Disconnect all cables from the -48 V DC SPD board.
8. Remove the board from the mounting plate.
9. Install the replacement board on the mounting plate.
10. Connect all cables to the replacement board.
11. Mount the board and plate in the power system and secure it with one screw.
12. Reconnect load and/or battery wires if required.
13. Turn ON all battery and/or independent DC port disconnect circuit breakers in the power.
14. Restore input power by closing all external protective or disconnect devices.
15. Close the subrack front and/or top cover.
16. Remove the grounding wrist strap.
17. Verify that no alarms are present.

Figure 8.4 Optional DC SPD Board Replacement

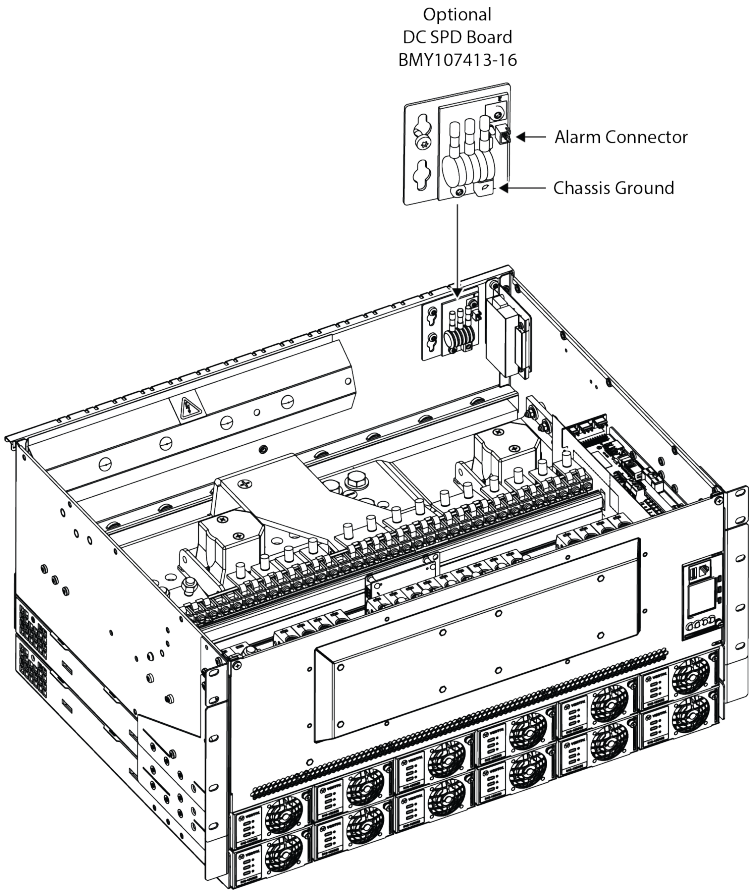

© 2026 Vertiv Group Corp. All Rights Reserved.

8.5.9 Optional IB2 and EIB Interface Boards Replacement

General information

These circuit board replacement procedures can be performed while the system is operating.

Refer to Figure 3.1 for circuit board locations.

Procedure

1. Performing this procedure may activate external alarms. Take one of the following actions. If possible, disable these alarms. If alarms cannot be easily disabled, notify the appropriate personnel to disregard any future alarms associated with this system during the procedure.

DANGER! The following steps expose service personnel to battery potential. Exercise extreme caution not to inadvertently contact or have any tool contact any energized electrical termination. DO NOT allow bare wire ends to contact any grounded or energized object during this procedure. Use only insulated tools. Read the Important Safety Instructions at the beginning of this document before performing this procedure.

ALERT! Failure to follow the next step may result in damage to the circuit board.

2. Connect an approved grounding strap to your wrist and attach the other end to a suitable ground.
3. Open the front door of the subrack.
4. Carefully label all wires connected to the customer connection terminal blocks on the circuit board. These wires must be connected to identical terminals on the replacement circuit board. Refer to Figure 8.5.
5. Carefully label all connectors plugged into the circuit board. These connectors must be installed in identical positions on the replacement circuit board. Refer to Figure 8.5.

DANGER! In the next step, external wiring may be energized from an external source. DO NOT allow bare wire ends to contact any grounded or energized object.

6. Remove the external wiring from the customer connection terminal blocks. DO NOT allow the bare wire end to contact any grounded or energized object. Isolate the wire end with electrical tape. Repeat for each wire to be removed.
7. Disconnect all connectors from the circuit board.
8. Remove the circuit board by removing the mounting screws that secure the circuit board to the door.
9. IMPORTANT: Do not intermix the old and replacement circuit boards. Set the switch on the replacement circuit board to match the old circuit board's setting. Refer to the "Setting Switch Options" section for switch settings.
10. Mount the replacement circuit board to the front door, using the previously removed screws.
11. Connect all connectors removed from the old circuit board into the same position on the replacement circuit board.

DANGER! In the next step, external wiring may be energized from an external source. DO NOT allow bare wire ends to contact any grounded or energized object.

12. Reconnect external wiring to the correct terminals on the customer connection terminal block. First, remove the electrical tape that was applied to the bare wire end in a previous step. DO NOT allow the bare wire end to contact any grounded or energized object. After securing the wire, gently tug on the wire to ensure that it cannot be pulled out of the terminal block. Repeat for each wire to be reconnected.
13. Close the front door of the subrack.
14. Remove the grounding wrist strap.
15. Enable the external alarms or notify appropriate personnel that this procedure is complete.

© 2026 Vertiv Group Corp. All Rights Reserved.

16. Restart NCU so the new board appears in the inventory list and verify that no local or remote alarms are active on the system.

Figure 8.5 Optional IB2 and EIB Interface Boards Replacement

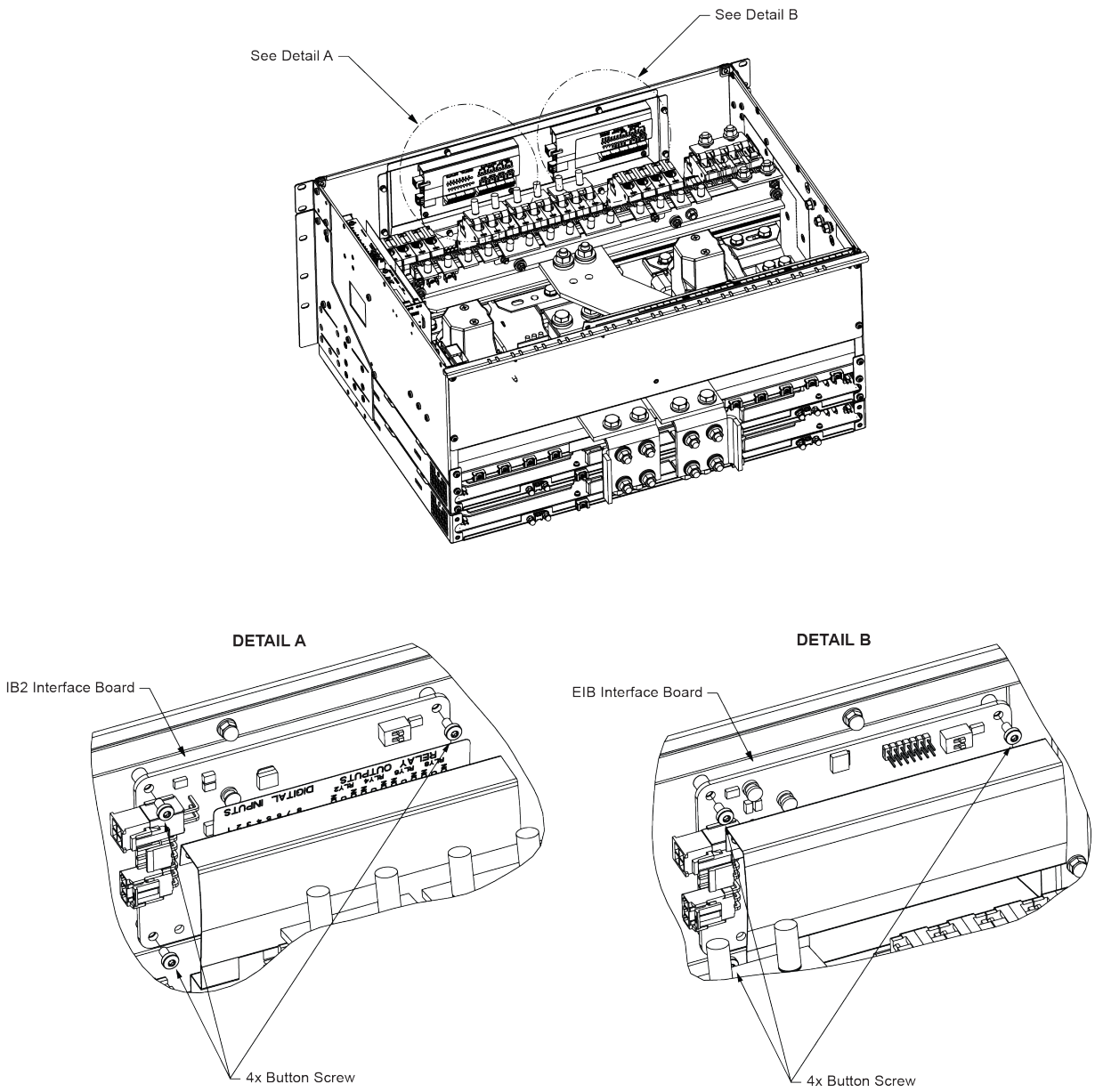

8.5.10 Optional IB4 Board Replacement

General information

These circuit board replacement procedures can be performed while the system is operating.

Procedure

1. Performing this procedure may activate external alarms. Take one of the following actions. If possible, disable these alarms. If alarms cannot be easily disabled, notify the appropriate personnel to disregard any future alarms associated with this system during the procedure.

DANGER! The following steps expose service personnel to battery potential. Exercise extreme caution not to inadvertently contact or have any tool contact any energized electrical termination.

ALERT! Failure to follow the next step may result in damage to the circuit board.

© 2026 Vertiv Group Corp. All Rights Reserved.

2. Connect an approved grounding strap to your wrist. Attach the other end to a suitable ground.
3. Open the subrack front and/or top cover.
4. Remove the screw and release the mounting plate from the rear plate.
5. Disconnect all connectors from the IB4 circuit board.
6. Remove the three (3) screws that secure the protective cover and circuit board to the mounting bracket.
7. Secure the replacement circuit board and the protective cover to the mounting bracket using the three (3) screws.
8. Connect all connectors to the replacement circuit board in their original positions.
9. Install the mounting bracket with the new circuit board. Install the screw removed in step 4.
10. Install the subrack front and/or top cover plate.
11. Remove the grounding wrist strap.
12. Enable the external alarms or notify appropriate personnel that this procedure is complete.
13. Restart NCU so the new board appears in the inventory list and verify that no local alarms are active on the system.

Figure 8.6 Optional IB4 Board Replacement

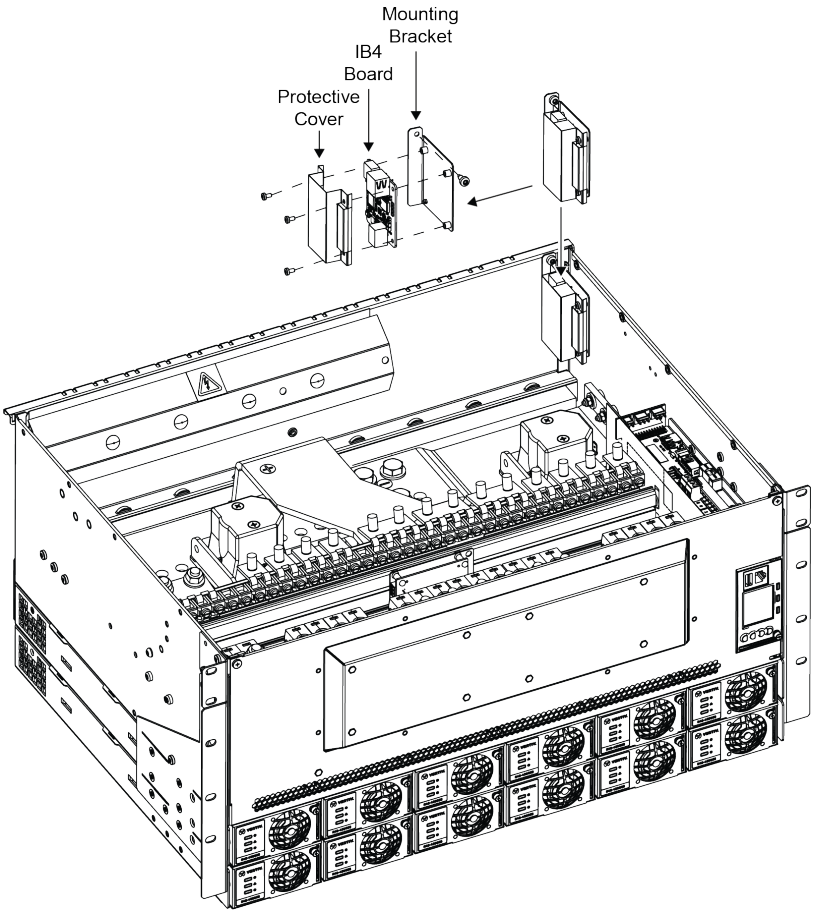

© 2026 Vertiv Group Corp. All Rights Reserved.

Connect with Vertiv on Social Media

https://www.facebook.com/vertiv/

https://www.instagram.com/vertiv/

https://www.linkedin.com/company/vertiv/

https://www.x.com/vertiv/

© 2026 Vertiv Group Corp. All Rights Reserved.

Vertiv.com | Vertiv Headquarters, 505 N Cleveland Ave, Westerville, OH 43082, USA

© 2026 Vertiv Group Corp. All rights reserved. Vertiv™ and the Vertiv logo are trademarks or registered trademarks of Vertiv Group Corp. All other names and logos referred to are trade names, trademarks or registered trademarks of their respective owners. While every precaution has been taken to ensure accuracy and completeness here, Vertiv Group Corp. assumes no responsibility, and disclaims all liability, for damages resulting from use of this information or for any errors or omissions.

10185212-01-UM_REVD

© 2026 Vertiv Group Corp. All Rights Reserved.