Solution: SR2N02010PAA2

1. Change Log 3

2. Site Planning Datasheet 4

3. Interconnection Guide (ICG) 5

4. Field Supplied Cable & Part List 19

5. Vertiv MSR2 600mm IT Rack 20

6. Vertiv MSR2 Power Management Cabinet (PMC) 21

7. Vertiv Liebert CRD10 with Plenums 22

8. Vertiv MSR2 Fire Suppression System (FSS) 23

9. Power Management Unit - 10kW (PMU10) 24

10. PMU10 Terminal Blocks Size 25

11. Vertiv MSR2 - CT600 Cable Tray 600mm 26

12. Scope of Work 27

1. Change Log

Rev	Date	Author	Description	Number of Change
A	1/29/2024	TK	Initial Release	CO-1104874
B	4/7/2025	TK	ICGs Update	CO-1112923
C	4/7/2025	TK	ICGs Update with HighSpeed mixing Fan	CO-1120265

2. Site Planning Datasheet

Smart Row 2 Site Planning Datasheet (208V, 3 phase, 4 wire + PE)

Configuration Number	Part Number	Max Row Capacity (kW)	IT Racks per Row	Capacity per Rack (kW)	Cooling Units per Row	pdu count	Main Input Breaker Size [6]	Per Condenser Breaker Size	Per Condenser Dry Weight kg (lbs)	Row Dimensions (L x H x D) mm (in)7	Row Weight kg (lbs)	Min. Staging Area m2 (ft2)
16	SR2N02010NAA2	10	2	5	1	2	100A	N/A[5]	60 (132.3)	2700 (106.3) x 2271 (107) x 1400 (55.2)	2048 (4516)	15.76 (169.7)
17	SR2N02010PAA2	10	2	5	1	4	100A	N/A[5]	60 (132.3)	2700 (106.3) x 2271 (107) x 1400 (55.2)	2076 (4577)	16.34 (175.9)
18	SR2N02010FAA2	10	2	5	2	4	100A	N/A[5]	60 (132.3)	3000 (118.2) x 2271 (107) x 1400 (55.2)	2696 (5945)	19.02 (204.8)
19	SR2N03010NAA2	10	3	3	1	3	100A	N/A[5]	60 (132.3)	3300 (130) x 2271 (107) x 1400 (55.2)	2218 (4890)	17.11 (184.2)
20	SR2N03010PAA2	10	3	3	1	6	100A	N/A[5]	60 (132.3)	3300 (130) x 2271 (107) x 1400 (55.2)	2260 (4983)	17.69 (190.5)
21	SR2N03010FAA2	10	3	3	2	6	100A	N/A[5]	60 (132.3)	3600 (141.8) x 2271 (107) x 1400 (55.2)	2880 (6350)	20.37 (219.3)
22	SR2N03020NAA2	20	3	6	1	3	175A	15A	118 (260.2)	3300 (130) x 2271 (107) x 1400 (55.2)	2448 (5397)	19.81 (213.3)
23	SR2N03020PAA2	20	3	6	1	6	175A	15A	118 (260.2)	3300 (130) x 2271 (107) x 1400 (55.2)	2490 (5490)	21.86 (235.3)
24	SR2N03020FAA2	20	3	6	2	6	175A	15A	118 (260.2)	3600 (141.8) x 2271 (107) x 1400 (55.2)	3110 (6857)	25.77 (277.4)
25	SR2N04020NAA2	20	4	5	1	4	175A	15A	118 (260.2)	3900 (153.6) x 2271 (107) x 1400 (55.2)	2618 (5772)	21.16 (227.8)
26	SR2N04020PAA2	20	4	5	1	8	175A	15A	118 (260.2)	3900 (153.6) x 2271 (107) x 1400 (55.2)	2674 (5896)	23.21 (249.9)
27	SR2N04020FAA2	20	4	5	2	8	175A	15A	118 (260.2)	4200 (165.4) x 2271 (107) x 1400 (55.2)	3294 (7263)	27.12 (292)
28	SR2N05020NAA2	20	5	4	1	5	175A	15A	118 (260.2)	4500 (177.2) x 2271 (107) x 1400 (55.2)	2788 (6147)	22.51 (242.3)
29	SR2N05020PAA2	20	5	4	1	10	175A	15A	118 (260.2)	4500 (177.2) x 2271 (107) x 1400 (55.2)	2858 (6301)	24.56 (264.4)
30	SR2N05020FAA2	20	5	4	2	10	175A	15A	118 (260.2)	4800 (189.0) x 2271 (107) x 1400 (55.2)	3478 (7669)	28.47 (306.5)

NOTES:

1. System Environmental Conditions: Indoors, 41°F to 104°F (5°C to 40°C), RH to 80% with Max dew point of 82.4°F (28°C)
2. Floor surface must be level and continuous (expansion joints sealed, raised floor tile gaps sealed, no floor drains, etc).
3. No building sprinkler head should be within 19.7 in (0.5 m).
4. Install in accordance with national and local electrical codes
5. 10kW condenser power is sourced from the indoor unit
6. Cable Sizing: 100A = 3 AWG ; 175A = 2/0 AWG
7. Row Dimensions do not include necessary space needed for access including per ADA or local codes.
8. Fire Suppression cabinet requires its own minimum 15A 120V utility drop.

SHEET NO.	DRAWN BY:	© 2020 VERTIV GROUP CORPORATION CONFIDENTIAL AND PROPRIETARY. ALL RIGHTS RESERVED.VERTIV AND THE VERTIV LOGO ARE TRADEMARKS OR REGISTERED TRADEMARKS OF VERTIV GROUP CORPORATION THIS DOCUMENT (AND THE INFORMATION IT CONTAINS) ARE THE PROPERTY OF VERTIV GROUP CORPORATION BY ACCEPTING IT INTO YOUR POSSESSION, YOU AGREE THAT YOU WILL KEEP THIS DOCUMENT AND ALL INFORMATION CONTAINED HEREIN IN STRICTEST CONFIDENCE AND WILL NOT COPY, RETRANSMIT,USE (EXCEPT SOLELY FOR THE BENEFIT OF VERTIV GROUP CORPORATION), SELL, LEND, OR OTHERWISE DISPOSE OF SAME, DIRECTLY OR INDIRECTLY, WITHOUT THE EXPRESS WRITTEN PERMISSION OF VERTIV GROUP CORPORATION, AND THIS DOCUMENT SHALL BE RETURNED TO VERTIV GROUP CORPORATION IMMEDIATELY UPON REQUEST.	DWG. NO.	VERTIV™
CO. NO.	DESIGNED BY:	TITLE	DATE (LATEST REV.)	
REF DWG.	APPROVED BY:	Smart Row 2 Site Planning Datasheet (208V, 3 phase, 4 wire + PE)	REVISION	505 N. CLEVELAND AVE WESTERVILLE, OHIO 43081

FORM NO. DPN004659 REV - A

3. Interconnection Guide (ICG)

Vertiv Row Solution
Knowledge to Build Optimized Infrastructure Solutions

Vertiv™ SmartRow™ 2: 2x IT Rack 10kW With Fire Suppression System

Row IT Load Capacity: 10 kW
Power Redundancy UPS: Yes
Power Redundancy rPDU: Yes
Cooling Redundancy: No
Fire Suppression: Yes
Dimensions:
Length: 8.86 ft [2700 mm]
Depth: 4.6 ft [1400 mm]
Height: 7.38 ft [2250 mm]

© 2020 VERTIV GROUP CORPORATION CONFIDENTIAL AND PROPRIETARY. ALL RIGHTS RESERVED.VERTIV AND THE VERTIV LOGO ARE TRADEMARKS OR REGISTERED TRADEMARKS OF VERTIV GROUP CORPORATION THIS DOCUMENT (AND THE INFORMATION IT CONTAINS) ARE THE PROPERTY OF VERTIV GROUP CORPORATION BY ACCEPTING IT INTO YOUR POSSESSION, YOU AGREE THAT YOU WILL KEEP THIS DOCUMENT AND ALL INFORMATION CONTAINED HEREIN IN STRICTEST CONFIDENCE AND WILL NOT COPY, RETRANSMIT,USE (EXCEPT SOLELY FOR THE BENEFIT OF VERTIV GROUP CORPORATION), SELL, LEND, OR OTHERWISE DISPOSE OF SAME, DIRECTLY OR INDIRECTLY, WITHOUT THE EXPRESS WRITTEN PERMISSION OF VERTIV GROUP CORPORATION, AND THIS DOCUMENT SHALL BE RETURNED TO VERTIV GROUP CORPORATION IMMEDIATELY UPON REQUEST.

SHEET NO.	1 / 14
CHANGE NO.	
PAGE DESCRIPTION:	1- Title page / cover sheet
DRAWN BY:	Nilesh Patil
APPROVED BY:	Gmerek, Mike
DWG NO.	SR2N02010PAA2
DATE (LATEST REV.)	
REVISION:	
TITLE / DESCRIPTION:	Vertiv™ SmartRow™ 2: 2x IT Rack 10kW With Fire Suppression System

505 N. CLEVELAND
AVE WESTERVILLE
OH 43081

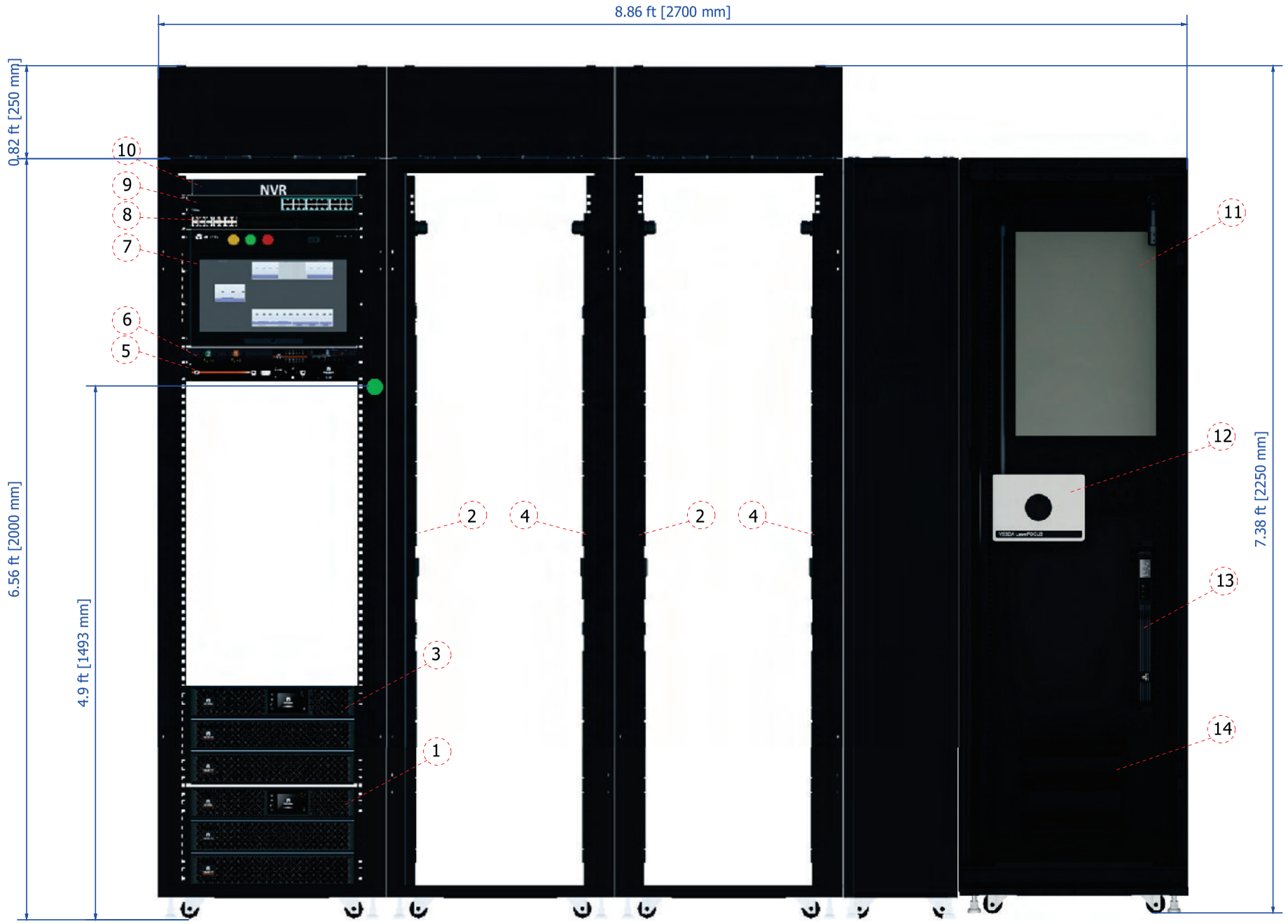

Front View

No.	Components
1	UPS1 (Feed A)
2	rPDU Feed A
3	UPS2 (Feed B)
4	rPDU Feed B
5	RTS
6	Fan controller
7	PMU
8	RDU501
9	Switch
10	NVR (optional)
11	Fire Control panel (FCP)
12	VESDA Detector
13	Air mixing fan UPS
14	Air mixing fan

Notes:
1. Row IT Load Capacity is driven by number of IT-Racks (IT-Rack x 3.33 kW per rack).
2. System Environmental Conditions: Indoors, 41 F to 104 F (5 C to 40 C), RH to 80% with Max dew point of 82.4 F (28 C).
3. Floor surface must be level and continuous (expansion joints sealed, raised floor tile gaps sealed, no floor drains, etc).
4. No building sprinkler head should be within 19.7 in (0.5 m).

● **Temperature Sensor**

SHEET NO. 2 / 14	DRAWN BY: Nilesh Patil	© 2020 VERTIV GROUP CORPORATION CONFIDENTIAL AND PROPRIETARY. ALL RIGHTS RESERVED.VERTIV AND THE VERTIV LOGO ARE TRADEMARKS OR REGISTERED TRADEMARKS OF VERTIV GROUP CORPORATION THIS DOCUMENT (AND THE INFORMATION IT CONTAINS) ARE THE PROPERTY OF VERTIV GROUP CORPORATION BY ACCEPTING IT INTO YOUR POSSESSION, YOU AGREE THAT YOU WILL KEEP THIS DOCUMENT AND ALL INFORMATION CONTAINED HEREIN IN STRICTEST CONFIDENCE AND WILL NOT COPY, RETRANSMIT,USE (EXCEPT SOLELY FOR THE BENEFIT OF VERTIV GROUP CORPORATION), SELL, LEND, OR OTHERWISE DISPOSE OF SAME, DIRECTLY OR INDIRECTLY, WITHOUT THE EXPRESS WRITTEN PERMISSION OF VERTIV GROUP CORPORATION, AND THIS DOCUMENT SHALL BE RETURNED TO VERTIV GROUP CORPORATION IMMEDIATELY UPON REQUEST.	DWG NO. SR2N02010PAA2	VERTIV
CHANGE NO.	APPROVED BY: Gmerek, Mike		DATE (LATEST REV.)	
PAGE DESCRIPTION: 2- vRow Front View		TITLE / DESCRIPTION: Vertiv™ SmartRow™ 2: 2x IT Rack 10kW With Fire Suppression System	REVISION:	505 N. CLEVELAND AVE WESTERVILLE OH 43081

SR2N02010PAA2-SUBTL
Revision: Rev C
Author: Tomáš Krech
Date: 7/4/2025

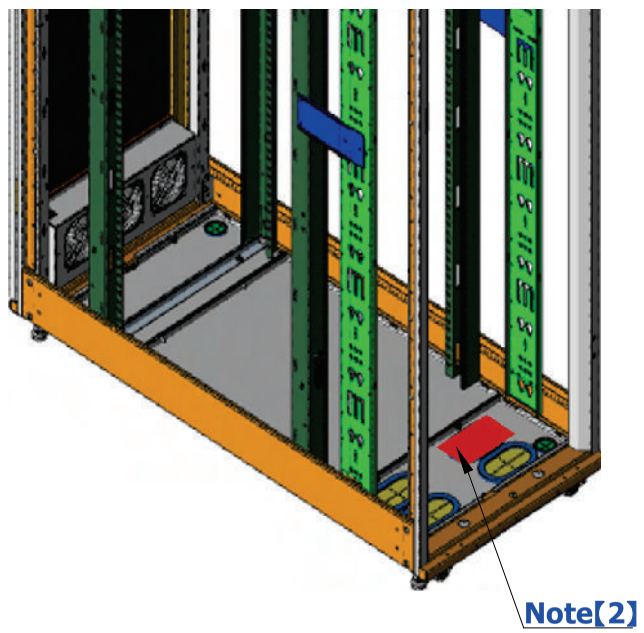

Top View

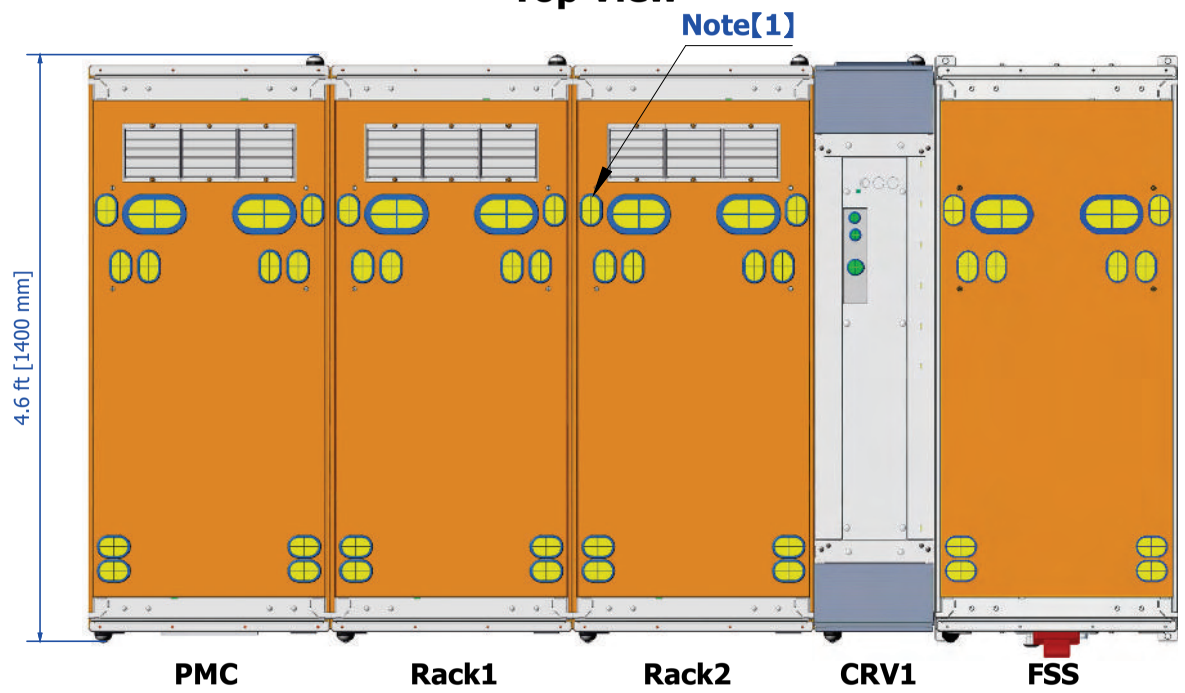

PMC Connection Details

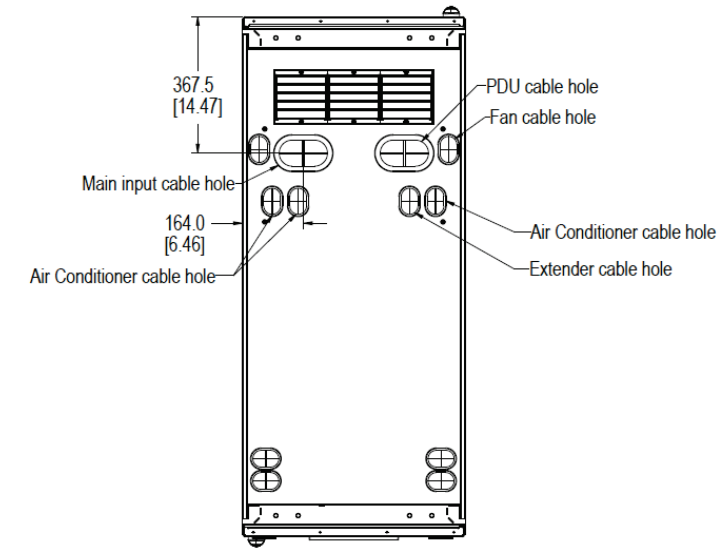

CRV Connection Details

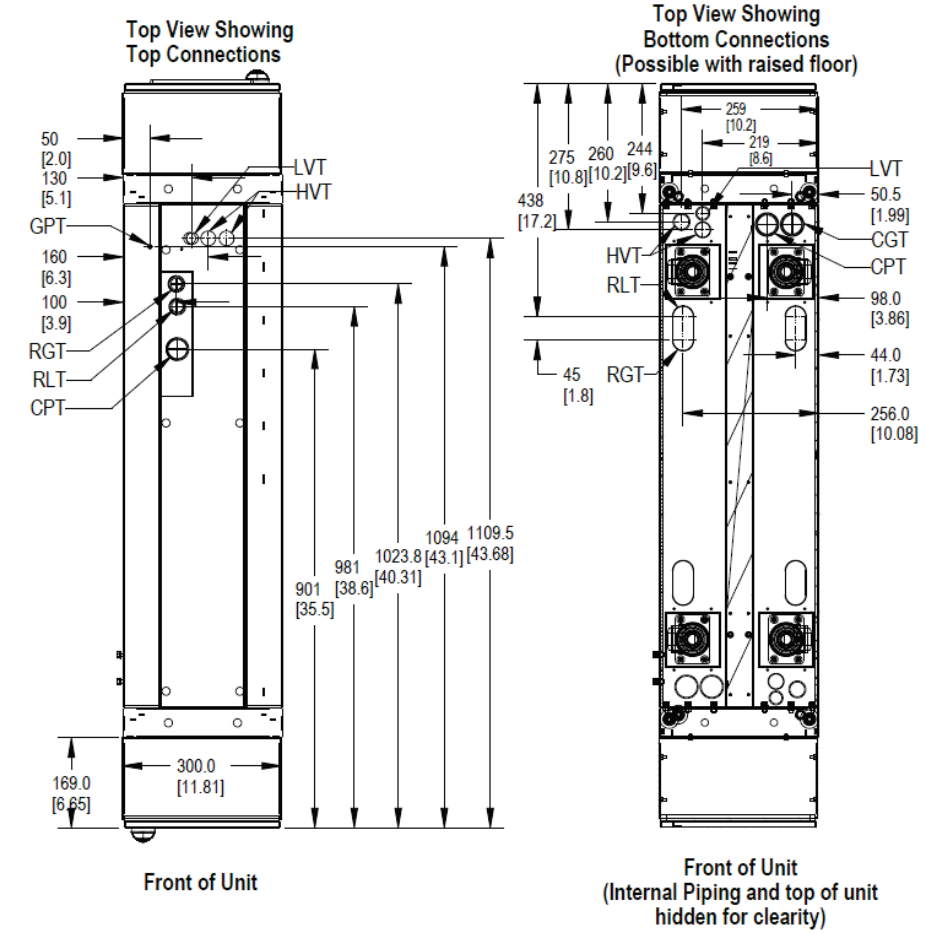

Dimensions in "mm"

Note :- 1. Cable trough not shown to make top panel details visible.
2. Do not use the marked hole for bottom cable routing.

Unit Top Connections			Unit Bottom Connections		
RLT	Refrigerant Liquid Line Inlet	1/2" O.D Copper Sweat	RLT	Refrigerant Liquid Line Inlet	1/2" O.D Copper
RGT	Refrigerant Gas Line Outlet	5/8" O.D Copper Sweat	RGT	Refrigerant Gas Line Outlet	5/8" O.D Copper
CPT	Condensate Pump	1/2" NPTF FEMALE	CPT	Condensate Pump	1/2" NPTF FEMALE
HVT	High Voltage Top Connection	Combination knockout 1-1/8" (29mm)	HVT	High Voltage Bottom Connection	Combination knockout 1-1/8" (29mm)
LVT	Low Voltage Top Connection	Knockout Hole Diameter 7/8" (22 mm)	LVT	Low Voltage Bottom Connection	Knockout Hole Diameter 7/8" (22 mm)
GPT	Grounding Point	Thread Hole M8	CGT	Condensate Gravity	1/2" NPTF FEMALE

Note :- Pipe sizes are for connection purposes and not the required line size.
Consult thermal manuals for line sizes.

SHEET NO. 3 / 14	DRAWN BY: Nilesh Patil	DWG NO. SR2N02010PAA2	
CHANGE NO.	APPROVED BY: Gmerek, Mike	DATE (LATEST REV.)	
PAGE DESCRIPTION: 2.a- vRow Top View	TITLE / DESCRIPTION: Vertiv™ SmartRow™ 2: 2x IT Rack 10kW With Fire Suppression System	REVISION:	505 N. CLEVELAND AVE WESTERVILLE OH 43081

© 2020 VERTIV GROUP CORPORATION CONFIDENTIAL AND PROPRIETARY. ALL RIGHTS RESERVED.VERTIV AND THE VERTIV LOGO ARE TRADEMARKS OR REGISTERED TRADEMARKS OF VERTIV GROUP CORPORATION THIS DOCUMENT (AND THE INFORMATION IT CONTAINS) ARE THE PROPERTY OF VERTIV GROUP CORPORATION BY ACCEPTING IT INTO YOUR POSSESSION, YOU AGREE THAT YOU WILL KEEP THIS DOCUMENT AND ALL INFORMATION CONTAINED HEREIN IN STRICTEST CONFIDENCE AND WILL NOT COPY, RETRANSMIT, USE (EXCEPT SOLELY FOR THE BENEFIT OF VERTIV GROUP CORPORATION), SELL, LEND, OR OTHERWISE DISPOSE OF SAME, DIRECTLY OR INDIRECTLY, WITHOUT THE EXPRESS WRITTEN PERMISSION OF VERTIV GROUP CORPORATION, AND THIS DOCUMENT SHALL BE RETURNED TO VERTIV GROUP CORPORATION IMMEDIATELY UPON REQUEST.

SR2N02010PAA2-SUBTL
Revision: Rev C
Author: Tomáš Krech
Date: 7/4/2025

Cable overview

Packaging No.	Cable Category	Cable No.	Tag1	Tag2	Length (inch/mm)	Description
0411A859	Power cable (onsite assembled)	W01	PMU-UPS1 INPUT L1 L2 N G	UPS1-INPUT L1 L2 N G	94.5/2400	PMU to UPS1 input cable
	Power cable (onsite assembled)	W02	PMU-UPS2 INPUT L1 L2 N G	UPS2-INPUT L1 L2 N G	86.6/2200	PMU to UPS2 input cable
	Power cable (onsite assembled)	W03	UPS OUTPUT	PMU UPS1-Output	94.5/2400	UPS1 to PMU output cable
	Power cable (onsite assembled)	W04	PMU TO CRV1	-	165/4200	PMU to CRV1 output cable
	Communication cable (onsite assembled)	W111	CRV1	Switcher(From CRV1)	196.9/5000	CRV1 to Switch communication cable
	Communication cable (onsite assembled)	W116	PDU	PDU	157.5/4000	PDU1A to PDU1B communication cable
	Communication cable (onsite assembled)	W117	PDU	PDU	118.1/3000	PDU1B to PDU2A communication cable
	Communication cable (onsite assembled)	W116	PDU	PDU	157.5/4000	PDU2A to PDU2B communication cable
	Communication cable (onsite assembled)	W114	FC	Switcher(From FC)	70.9/1800	FC to Switch communication cable
	Communication cable (onsite assembled)	W115	PDU1	Switcher(From PDU)	70.9/1800	PDU to Switch communication cable
	Communication cable (onsite assembled)	W119	RDU501	Switcher(From RDU501)	47.2/1200	RDU501 to Switch Communication Cable
	Communication cable (onsite assembled)	W112	UPS1	Switcher(From UPS1)	157.5/4000	UPS 1 to Switch communication cable
	Communication cable (onsite assembled)	W113	UPS2	Switcher(From UPS2)	145.7/3700	UPS 2 to Switch communication cable
	Communication cable (onsite assembled)	W118	NVR	Switcher(From NVR)	47.2/1200	NVR to Switch Communication Cable
0411C197	MSR2-XF6P Internal Integrated Cable (factory assembled)	W502	201-AI/DI_R	208-NO/208-COM	76.77/1950	The rear door status switch is connected to the 4DIF-DI cable
	MSR2-XF6P Internal Integrated Cable (factory assembled)	W503	201-AI/DI_L	204-NO/204-COM	17.71/450	The front door status switch is connected to the 4DIF-DI cable
	MSR2-XF6P Internal Integrated Cable (factory assembled)	W504	POE LOCK_RJ	203/IL-1:RJ45	74.80/1900	Intelligent POE lock communication extension cable with mother connector-FSS
	MSR2-XF6P Internal Integrated Cable (factory assembled)	W505 & W506	203/IL-1 & To 203/IL-1	To 207/IL-2 & 207/IL-2	66.93/1700 & 133.90/3400	Intelligent POE lock communication cable for the front and rear doors 1 & 2 -FSS
0411C198	Preinstalled cables for cascading FSS cabinets (factory assembled)	W402	RACK:F-SW	FSS:F-SW	25.6/650	FSS cabinet front door preinstalled cascading wiring harness-for Door Swich
	Preinstalled cables for cascading FSS cabinets (factory assembled)	W403	RACK:RLIGHT	FSS:RLIGHT	13.78/350	FSS cabinet Rear door preinstalled cascading cable-for Door Light
	Preinstalled cables for cascading FSS cabinets (factory assembled)	W402	RACK:FLIGHT	FSS:FLIGHT	25.6/650	FSS cabinet front door preinstalled cascading wiring harness-for Door Light
	Preinstalled cables for cascading FSS cabinets (factory assembled)	W403	RACK:R-SW	FSS:R-SW	13.78/350	FSS cabinet Rear door preinstalled cascading cable-for Door Swich
	Preinstalled cables for cascading FSS cabinets (factory assembled)	W409	RACK:THD-RJ2	FSS:4DIF_1-RJ1	27.56/700	FSS cabinet the first 4DIF to the previous RACK THD communication cable
	Preinstalled cables for cascading FSS cabinets (factory assembled)	W410	FSS:4DIF_1-RJ2	FSS:4DIF_2-RJ1	13.78/350	FSS cabinet the first 4DIF to the second 4DIF communication cable
	Fire signal reporting cable (factory assembled)	W413	4DIF_1_Door1/DI1	TB3-5/6	78.74/2000	FSS_4DIF_1 to FSS Terminal Blocks (RELEASE ALARM Signal)
	Fire signal reporting cable (factory assembled)	W414	4DIF_1_Door2/DI2	TB3-3/4	78.74/2000	FSS_4DIF_1 to FSS Terminal Blocks (SUPERVISORY ALARM Signal)
	Fire signal reporting cable (factory assembled)	W415	4DIF_1_Water/DI3	TB3-7/8	78.74/2000	FSS_4DIF_1 to FSS Terminal Blocks (ALARM Signal)

SHEET NO. 4 / 14	DRAWN BY: Nilesh Patil	DWG NO. SR2N02010PAA2	
CHANGE NO.	APPROVED BY: Gmerek, Mike	DATE (LATEST REV.)	
PAGE DESCRIPTION: 3- Cable overview : =vRow+15PMC-W01 - =vRow+FSS-W415	TITLE / DESCRIPTION: Vertiv™ SmartRow™ 2: 2x IT Rack 10kW With Fire Suppression System	REVISION:	505 N. CLEVELAND AVE WESTERVILLE OH 43081

© 2020 VERTIV GROUP CORPORATION CONFIDENTIAL AND PROPRIETARY. ALL RIGHTS RESERVED.VERTIV AND THE VERTIV LOGO ARE TRADEMARKS OR REGISTERED TRADEMARKS OF VERTIV GROUP CORPORATION THIS DOCUMENT (AND THE INFORMATION IT CONTAINS) ARE THE PROPERTY OF VERTIV GROUP CORPORATION BY ACCEPTING IT INTO YOUR POSSESSION, YOU AGREE THAT YOU WILL KEEP THIS DOCUMENT AND ALL INFORMATION CONTAINED HEREIN IN STRICTEST CONFIDENCE AND WILL NOT COPY, RETRANSMIT,USE (EXCEPT SOLELY FOR THE BENEFIT OF VERTIV GROUP CORPORATION), SELL, LEND, OR OTHERWISE DISPOSE OF SAME, DIRECTLY OR INDIRECTLY, WITHOUT THE EXPRESS WRITTEN PERMISSION OF VERTIV GROUP CORPORATION, AND THIS DOCUMENT SHALL BE RETURNED TO VERTIV GROUP CORPORATION IMMEDIATELY UPON REQUEST.

Cable overview

Packaging No.	Cable Category	Cable No.	Tag1	Tag2	Length (inch/mm)	Description
0411C198	Fire signal reporting cable (factory assembled)	W416	4DIF_1_Smoke/DI4	TB3-1/2	78.74/2000	FSS_4DIF_1 to FSS Terminal Blocks (TROUBLE ALARM Signal)
0411C199	MSR2-XF6P Internal system expansion cable (onsite assembled)	W411	RACK:FLIGHT	TO FSS:RACK:FLIGHT	13.78/350	RACK2 to FSS Cabinet Front door light power cascade cable(across CRV)
	MSR2-XF6P Internal system expansion cable (onsite assembled)	W411	RACK:F-SW	TO FSS:RACK:F-SW	13.78/350	RACK2 to FSS Cabinet Front door switch power cascade cable(across CRV)
	FSS cabinet fire communication & control cables (onsite assembled)	W419	CRV S_37/38	TB8-3 NC/COM	59.06/1500	CRV1 to FSS Terminal Blocks/Relays - Short
	FSS cabinet fire communication & control cables (onsite assembled)	W420	UPS1_7/8	TB9-1 NC/COM	295.28/7500	UPS 1 EPO to FSS Terminal Blocks/Relays
	FSS cabinet fire communication & control cables (onsite assembled)	W421	UPS2_7/8	TB9-2 NC/COM	295.28/7500	UPS 2 EPO to FSS Terminal Blocks/Relays
	FSS cabinet fire communication & control cables (onsite assembled)	W427	PSI5 FSS	PSI5 FSS	314.96/8000	Extension Line Cord for PSI5 Input
0411C200	FSS cabinet fire communication and control cables (onsite assembled)	W423	L TB10-2/N TB10-3/PE TB10-4	FAN 1 L/N/PE	118.11/3000	Fan 1 to FSS Terminal Blocks/Relays
	FSS cabinet fire communication and control cables (onsite assembled)	W426	L TB5-7 COM/N TB10-9/PE TB10-10	PSI5	100.4/2550	PSI5 output to FSS Terminal Blocks/Relays
0411C206	Low voltage Power cable (Factory assembled)	W07	PMU-RLIGHT DC+ DC-	PMC-RLIGHT DC+ DC-	39.4/1000	PMU to PMC rear door LED light power cable
	Low voltage Power cable (Factory assembled)	W09	PMU-FLIGHT FWH FRE FBK FBL	PMC-FLIGHT	68.9/1750	PMU to PMC front door LED light power cable
	Low voltage Power cable (Factory assembled)	W11	PMU-F-SW FCOM FNC	PMC-F-SW	68.9/1750	PMU to PMC front door microswitch power cable
	Low voltage Power cable (Factory assembled)	W12	PMU-R-SW RCOM RNC	PMC-R-SW	39.4/1000	PMU to PMC rear door microswitch power cable
	Low voltage Power cable (Factory assembled)	W08	HMI-P	PMU-HMI DC+ DC-	70.9/1800	PMU to HMI power cable
	Communication cable (factory assembled)	W102	PMU-DO2	RDU501-DO2	70.9/1800	PMU to RDU501 D02 Control Red Light Cable
	Communication cable (factory assembled)	W104	PMU-DI	4DI-RJ451	66.9/1700	PMU to 4DI SPD communication network cable
	Communication cable (factory assembled)	W105	PMU-RS485	RDU501-COM3	70.9/1800	PMU to RDU501 COM3 meter communication network cable
	Communication cable (factory assembled)	W106	4DI-DI1	RDU501-Sensor2	11.8/300	4DI to RDU501 Smoke 2 SPD Communication Network Cable
	Communication cable (factory assembled)	W108	RDU501-COM2	HMI-C	33.46/850	RDU501 COM2 to HMI communication cable
	Communication cable (factory assembled)	W109	RDU501-Sensor1	THD-RJ1	27.6/700	RDU501 to PMC cabinet THD communication cable
0411C208	Water immersion to RDU501 (onsite assembled)	W213	Water Leak1	RDU501_DI1	216.5/5500	Water immersion 1 to RDU501 communication cable
	Rear door light cascade cable (onsite assembled)	W210	PMC_RLIGHT	RACK_RLIGHT	25.6/650	PMC to RACK1 rear door LED light cascade cable
	Rear door microswitch cascade (onsite assembled)	W211	PMC_R-SW	RACK_R-SW	25.6/650	PMC to RACK1 cascade cables for rear door microswitches
	CRV's microswitch and Smart door lock cascade (onsite assembled)	W401-L	RDU:Smoke1	W401-L 385	177.2/4500	Micro Switch communication cable from PMC to CRV1
	Emergency fan cable (onsite assembled)	W209	PMC:FC Port1	RACK FAN-R	59.06/1500	PMC Emergency fan to FC controller cable
	CRV's microswitch and Smart door lock cascade (onsite assembled)	W357	1-NO/2-NO/2-COM	385/1-COM	92.52/2350	CRV1 internal door status collection cable
	CRV's microswitch and Smart door lock cascade (onsite assembled)	W358	First LOCK(F)/POE LOCK_RJ	Second LOCK/POE LOCK(F)	177.16/4500+ 66.93/1700	CRV1 internal intelligent POE door lock communication cable

SHEET NO. 5 / 14
DRAWN BY: Nilesh Patil
CHANGE NO.
APPROVED BY: Gmerek, Mike
PAGE DESCRIPTION: 3.a- Cable overview : =vRow+FSS-W416 - =vRow+CRV1-W358

© 2020 VERTIV GROUP CORPORATION CONFIDENTIAL AND PROPRIETARY. ALL RIGHTS RESERVED.VERTIV AND THE VERTIV LOGO ARE TRADEMARKS OR REGISTERED TRADEMARKS OF VERTIV GROUP CORPORATION THIS DOCUMENT (AND THE INFORMATION IT CONTAINS) ARE THE PROPERTY OF VERTIV GROUP CORPORATION BY ACCEPTING IT INTO YOUR POSSESSION, YOU AGREE THAT YOU WILL KEEP THIS DOCUMENT AND ALL INFORMATION CONTAINED HEREIN IN STRICTEST CONFIDENCE AND WILL NOT COPY, RETRANSMIT,USE (EXCEPT SOLELY FOR THE BENEFIT OF VERTIV GROUP CORPORATION), SELL, LEND, OR OTHERWISE DISPOSE OF SAME, DIRECTLY OR INDIRECTLY, WITHOUT THE EXPRESS WRITTEN PERMISSION OF VERTIV GROUP CORPORATION, AND THIS DOCUMENT SHALL BE RETURNED TO VERTIV GROUP CORPORATION IMMEDIATELY UPON REQUEST.

TITLE / DESCRIPTION: Vertiv™ SmartRow™ 2: 2x IT Rack 10kW With Fire Suppression System

DWG NO. SR2N02010PAA2
DATE (LATEST REV.)
REVISION:
505 N. CLEVELAND AVE WESTERVILLE OH 43081

SR2N02010PAA2-SUBTL
Revision: Rev C
Author: Tomáš Krech
Date: 7/4/2025

Cable overview

Packaging No.	Cable Category	Cable No.	Tag1	Tag2	Length (inch/mm)	Description
0411C210	MSR2-PMC10/20/MSR2-NR6P Internal Integrated Cable (factory assembled)	W201	201-AI/DI_L	204-NO;204-COM	17.71/450	The front door status switch is connected to the THD cable-Rack1
	MSR2-PMC10/20/MSR2-NR6P Internal Integrated Cable (factory assembled)	W202	201-AI/DI_R	208-NO;208-COM	76.77/1950	The rear door status switch is connected to the THD cable-Rack1
	MSR2-PMC10/20/MSR2-NR6P Internal Integrated Cable (factory assembled)	W205	206-C13	202-C14	137.80/3500	Emergency fan cascading cables for the front and rear doors-Rack1
	MSR2-PMC10/20/MSR2-NR6P Internal Integrated Cable (factory assembled)	W201	201-AI/DI_L	204-NO;204-COM	17.71/450	The front door status switch is connected to the THD cable-Rack2
	MSR2-PMC10/20/MSR2-NR6P Internal Integrated Cable (factory assembled)	W202	201-AI/DI_R	208-NO;208-COM	76.77/1950	The rear door status switch is connected to the THD cable-Rack2
	MSR2-PMC10/20/MSR2-NR6P Internal Integrated Cable (factory assembled)	W205	206-C13	202-C14	137.80/3500	Emergency fan cascading cables for the front and rear doors-Rack2
	MSR2-PMC10/20/MSR2-NR6P Internal Integrated Cable (factory assembled)	W201	201-AI/DI_L	204-NO;204-COM	17.71/450	The front door status switch is connected to the THD cable-PMC
	MSR2-PMC10/20/MSR2-NR6P Internal Integrated Cable (factory assembled)	W202	201-AI/DI_R	208-NO;208-COM	76.77/1950	The rear door status switch is connected to the THD cable-PMC
	MSR2-PMC10/20/MSR2-NR6P Internal Integrated Cable (factory assembled)	W205	206-C13	202-C14	137.80/3500	Emergency fan cascading cables for the front and rear doors-PMC
	MSR2-PMC10/20/MSR2-NR6P Internal Integrated Cable (factory assembled)	W206	POE LOCK_RJ	203/IL-1:RJ45	74.80/1900	Intelligent POE lock communication extension cable with mother connector-PMC
	MSR2-PMC10/20/MSR2-NR6P Internal Integrated Cable (factory assembled)	W207 & W208	203/IL-1 & To 203/IL-1	To 207/IL-2 & 207/IL-2	66.93/1700 & 145.66/3700	Intelligent POE lock communication cable for the front and rear doors 1 & 2 -PMC
	MSR2-PMC10/20/MSR2-NR6P Internal Integrated Cable (factory assembled)	W206	POE LOCK_RJ	203/IL-1:RJ45	74.80/1900	Intelligent POE lock communication extension cable with mother connector-Rack1
	MSR2-PMC10/20/MSR2-NR6P Internal Integrated Cable (factory assembled)	W207 & W208	203/IL-1 & To 203/IL-1	To 207/IL-2 & 207/IL-2	66.93/1700 & 145.66/3700	Intelligent POE lock communication cable for the front and rear doors 1 & 2 -Rack1
	MSR2-PMC10/20/MSR2-NR6P Internal Integrated Cable (factory assembled)	W206	POE LOCK_RJ	203/IL-1:RJ45	74.80/1900	Intelligent POE lock communication extension cable with mother connector-Rack2
	MSR2-PMC10/20/MSR2-NR6P Internal Integrated Cable (factory assembled)	W207 & W208	203/IL-1 & To 203/IL-1	To 207/IL-2 & 207/IL-2	66.93/1700 & 145.66/3700	Intelligent POE lock communication cable for the front and rear doors 1 & 2 -Rack2
0411C211	MSR2-NR6P cabinets are preinstalled with cable (factory assembled)	W208	THD-RJ2	THD-RJ1	33.5/850	THD cascaded pre-installed cables for the MSR2-NR6P cabinet-Rack2
	MSR2-NR6P cabinets are preinstalled with cable (factory assembled)	W302	RACK_FAN	RACK_FAN/To RACK_FAN	17.72/450	Pre-installed cables for the emergency fan cascade in the MSR2-NR6P cabinet-Rack2
	MSR2-NR6P cabinets are preinstalled with cable (factory assembled)	W208	THD-RJ2	THD-RJ1	33.5/850	THD cascaded pre-installed cables for the MSR2-NR6P cabinet-Rack1
	MSR2-NR6P cabinets are preinstalled with cable (factory assembled)	W302	RACK_FAN	RACK_FAN/To RACK_FAN	17.72/450	Pre-installed cables for the emergency fan cascade in the MSR2-NR6P cabinet-Rack1
	MSR2-NR6P cabinets are preinstalled with cable (factory assembled)	W300	RACK_FLIGHT	RACK_FLIGHT	25.98/660	The cable is preinstalled on the front door of MSR2-NR6P cabinet -LED light cascade cable for Rack1
	MSR2-NR6P cabinets are preinstalled with cable (factory assembled)	W300	RACK_F-SW	RACK_F-SW	25.98/660	The cable is preinstalled on the front door of MSR2-NR6P cabinet -Microswitch cascade cable for Rack1
	MSR2-NR6P cabinets are preinstalled with cable (factory assembled)	W301	RACK_RLIGHT	RACK_RLIGHT	25.98/660	The cable is preinstalled on the rear door of MSR2-NR6P cabinet -LED light cascade cable for Rack1
	MSR2-NR6P cabinets are preinstalled with cable (factory assembled)	W301	RACK_R-SW	RACK_R-SW	25.98/660	The cable is preinstalled on the rear door of MSR2-NR6P cabinet -Microswitch cascade cable for Rack1
	MSR2-NR6P cabinets are preinstalled with cable (factory assembled)	W300	RACK_FLIGHT	RACK_FLIGHT	25.98/660	The cable is preinstalled on the front door of MSR2-NR6P cabinet -LED light cascade cable for Rack2
	MSR2-NR6P cabinets are preinstalled with cable (factory assembled)	W300	RACK_F-SW	RACK_F-SW	25.98/660	The cable is preinstalled on the front door of MSR2-NR6P cabinet -Microswitch cascade cable for Rack2
	MSR2-NR6P cabinets are preinstalled with cable (factory assembled)	W301	RACK_RLIGHT	RACK_RLIGHT	25.98/660	The cable is preinstalled on the rear door of MSR2-NR6P cabinet -LED light cascade cable for Rack2
	MSR2-NR6P cabinets are preinstalled with cable (factory assembled)	W301	RACK-R-SW	RACK-R-SW	25.98/660	The cable is preinstalled on the rear door of MSR2-NR6P cabinet -Microswitch cascade cable for Rack2

© 2020 VERTIV GROUP CORPORATION CONFIDENTIAL AND PROPRIETARY. ALL RIGHTS RESERVED.VERTIV AND THE VERTIV LOGO ARE TRADEMARKS OR REGISTERED TRADEMARKS OF VERTIV GROUP CORPORATION THIS DOCUMENT (AND THE INFORMATION IT CONTAINS) ARE THE PROPERTY OF VERTIV GROUP CORPORATION BY ACCEPTING IT INTO YOUR POSSESSION, YOU AGREE THAT YOU WILL KEEP THIS DOCUMENT AND ALL INFORMATION CONTAINED HEREIN IN STRICTEST CONFIDENCE AND WILL NOT COPY, RETRANSMIT,USE (EXCEPT SOLELY FOR THE BENEFIT OF VERTIV GROUP CORPORATION), SELL, LEND, OR OTHERWISE DISPOSE OF SAME, DIRECTLY OR INDIRECTLY, WITHOUT THE EXPRESS WRITTEN PERMISSION OF VERTIV GROUP CORPORATION, AND THIS DOCUMENT SHALL BE RETURNED TO VERTIV GROUP CORPORATION IMMEDIATELY UPON REQUEST.

FC & Geist PDUs -SR2-FSS for 10K(2*ITRack)

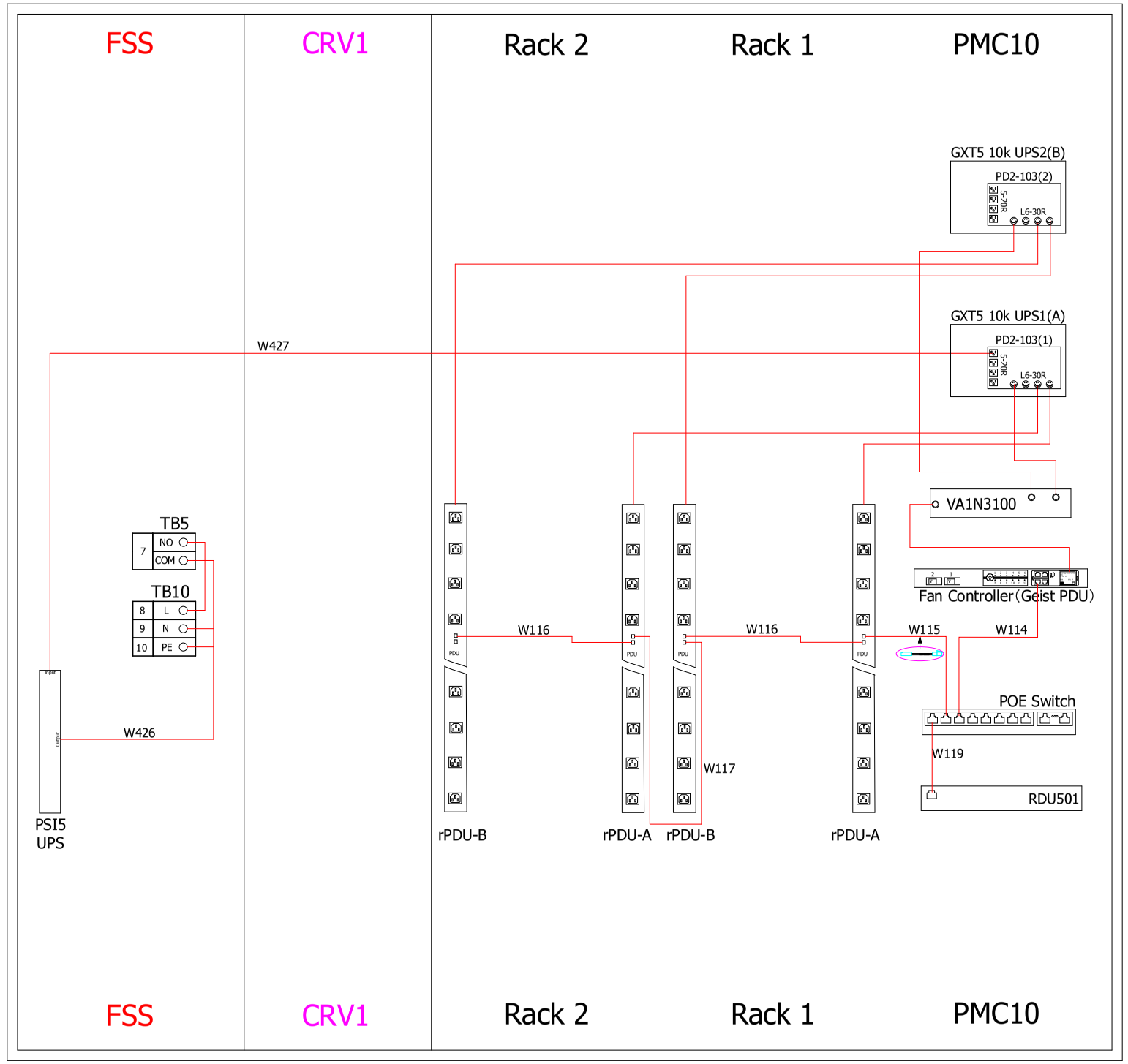

Rear View

Factory connected cables
Cables connected at assembly
Cables made on-site

SHEET NO. 7 / 14	DRAWN BY: Nilesh Patil	© 2020 VERTIV GROUP CORPORATION CONFIDENTIAL AND PROPRIETARY. ALL RIGHTS RESERVED.VERTIV AND THE VERTIV LOGO ARE TRADEMARKS OR REGISTERED TRADEMARKS OF VERTIV GROUP CORPORATION THIS DOCUMENT (AND THE INFORMATION IT CONTAINS) ARE THE PROPERTY OF VERTIV GROUP CORPORATION BY ACCEPTING IT INTO YOUR POSSESSION, YOU AGREE THAT YOU WILL KEEP THIS DOCUMENT AND ALL INFORMATION CONTAINED HEREIN IN STRICTEST CONFIDENCE AND WILL NOT COPY, RETRANSMIT,USE (EXCEPT SOLELY FOR THE BENEFIT OF VERTIV GROUP CORPORATION), SELL, LEND, OR OTHERWISE DISPOSE OF SAME, DIRECTLY OR INDIRECTLY, WITHOUT THE EXPRESS WRITTEN PERMISSION OF VERTIV GROUP CORPORATION, AND THIS DOCUMENT SHALL BE RETURNED TO VERTIV GROUP CORPORATION IMMEDIATELY UPON REQUEST.	DWG NO. SR2N02010PAA2	
CHANGE NO.	APPROVED BY: Gmerek, Mike		DATE (LATEST REV.)	
PAGE DESCRIPTION: 4- PDU wiring diagram		TITLE / DESCRIPTION: Vertiv™ SmartRow™ 2: 2x IT Rack 10kW With Fire Suppression System	REVISION:	505 N. CLEVELAND AVE WESTERVILLE OH 43081

VERTIV

VERTIV

CRVs(CRD10)-SR2-FSS for 10K (2*ITRack)

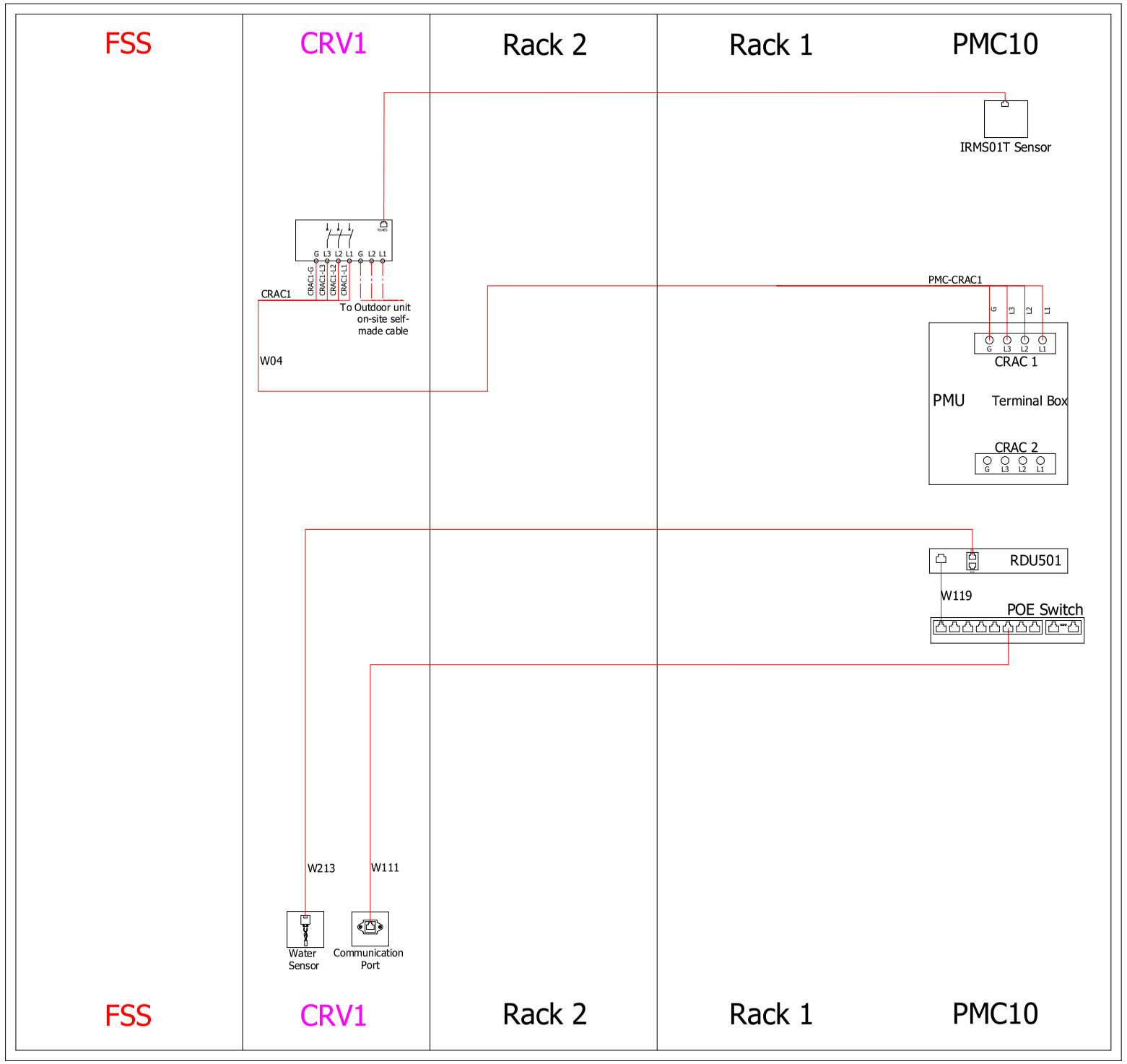

Rear View

Factory connected cables
Cables connected at assembly
Cables made on-site

SHEET NO. 8 / 14	DRAWN BY: Nilesh Patil	© 2020 VERTIV GROUP CORPORATION CONFIDENTIAL AND PROPRIETARY. ALL RIGHTS RESERVED.VERTIV AND THE VERTIV LOGO ARE TRADEMARKS OR REGISTERED TRADEMARKS OF VERTIV GROUP CORPORATION THIS DOCUMENT (AND THE INFORMATION IT CONTAINS) ARE THE PROPERTY OF VERTIV GROUP CORPORATION BY ACCEPTING IT INTO YOUR POSSESSION, YOU AGREE THAT YOU WILL KEEP THIS DOCUMENT AND ALL INFORMATION CONTAINED HEREIN IN STRICTEST CONFIDENCE AND WILL NOT COPY, RETRANSMIT,USE (EXCEPT SOLELY FOR THE BENEFIT OF VERTIV GROUP CORPORATION), SELL, LEND, OR OTHERWISE DISPOSE OF SAME, DIRECTLY OR INDIRECTLY, WITHOUT THE EXPRESS WRITTEN PERMISSION OF VERTIV GROUP CORPORATION, AND THIS DOCUMENT SHALL BE RETURNED TO VERTIV GROUP CORPORATION IMMEDIATELY UPON REQUEST.	DWG NO. SR2N02010PAA2	VERTIV
CHANGE NO.	APPROVED BY: Gmerek, Mike		DATE (LATEST REV.)	
PAGE DESCRIPTION: 4.a- Air conditioner wiring diagram		TITLE / DESCRIPTION: Vertiv™ SmartRow™ 2: 2x IT Rack 10kW With Fire Suppression System	REVISION:	505 N. CLEVELAND AVE WESTERVILLE OH 43081

Intelligent Locks -SR2-FSS for 10k (2*ITRack)

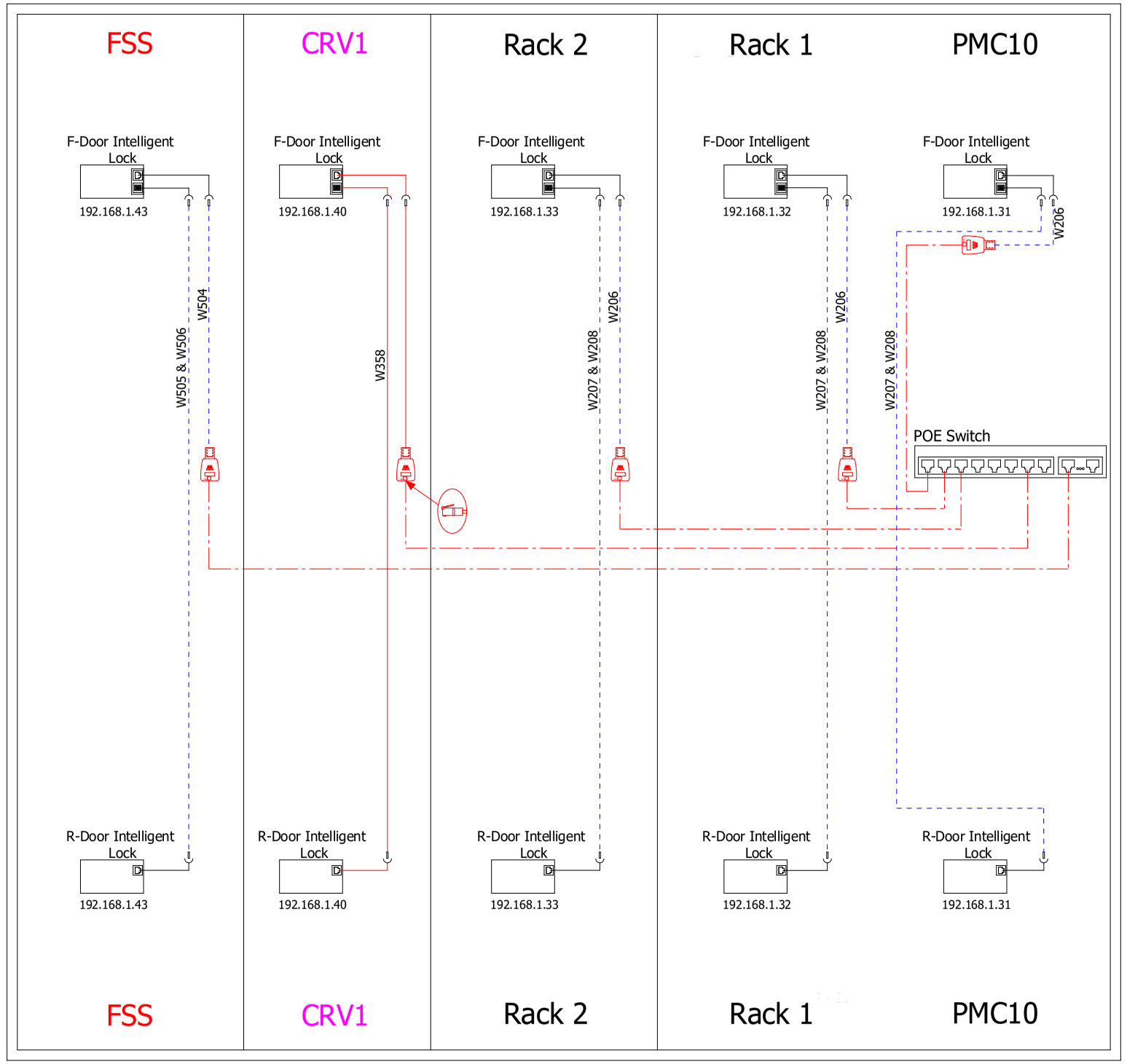

Rear View

- Factory connected cables
- Cables connected at assembly
- Cables made on-site

SHEET NO. 9 / 14	DRAWN BY: Nilesh Patil	© 2020 VERTIV GROUP CORPORATION CONFIDENTIAL AND PROPRIETARY. ALL RIGHTS RESERVED.VERTIV AND THE VERTIV LOGO ARE TRADEMARKS OR REGISTERED TRADEMARKS OF VERTIV GROUP CORPORATION THIS DOCUMENT (AND THE INFORMATION IT CONTAINS) ARE THE PROPERTY OF VERTIV GROUP CORPORATION BY ACCEPTING IT INTO YOUR POSSESSION, YOU AGREE THAT YOU WILL KEEP THIS DOCUMENT AND ALL INFORMATION CONTAINED HEREIN IN STRICTEST CONFIDENCE AND WILL NOT COPY, RETRANSMIT,USE (EXCEPT SOLELY FOR THE BENEFIT OF VERTIV GROUP CORPORATION), SELL, LEND, OR OTHERWISE DISPOSE OF SAME, DIRECTLY OR INDIRECTLY, WITHOUT THE EXPRESS WRITTEN PERMISSION OF VERTIV GROUP CORPORATION, AND THIS DOCUMENT SHALL BE RETURNED TO VERTIV GROUP CORPORATION IMMEDIATELY UPON REQUEST.	DWG NO. SR2N02010PAA2	
CHANGE NO.	APPROVED BY: Gmerek, Mike		DATE (LATEST REV.)	
PAGE DESCRIPTION: 4.b- Intelligent lock wiring diagram		TITLE / DESCRIPTION: Vertiv™ SmartRow™ 2: 2x IT Rack 10kW With Fire Suppression System	REVISION:	505 N. CLEVELAND AVE WESTERVILLE OH 43081

LED & Micro Switch-SR2-FSS for 10k (2*ITRack)

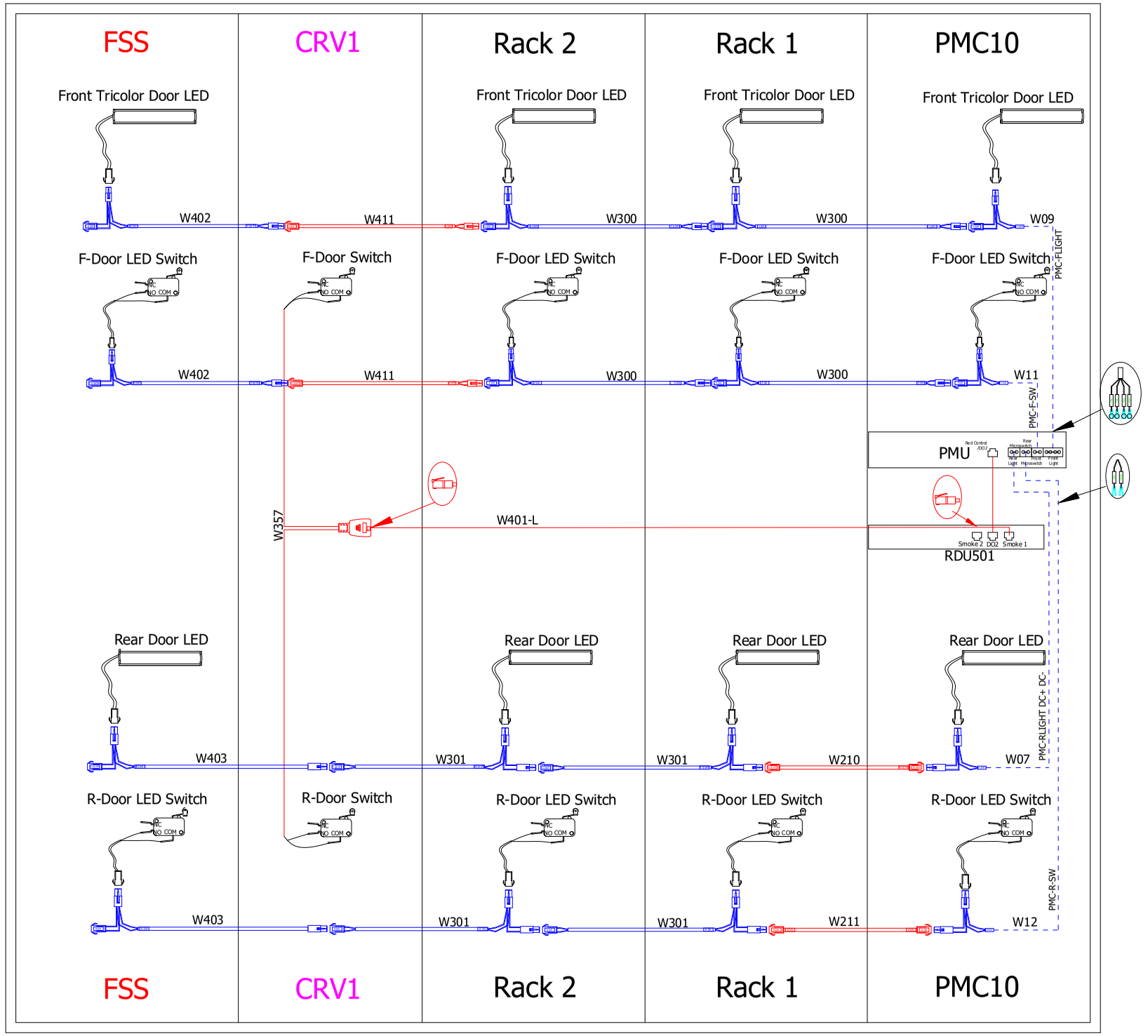

Rear View

- Factory connected cables
- Cables connected at assembly
- Cables made on-site

SHEET NO. 10 / 14	DRAWN BY: Nilesh Patil	© 2020 VERTIV GROUP CORPORATION CONFIDENTIAL AND PROPRIETARY. ALL RIGHTS RESERVED.VERTIV AND THE VERTIV LOGO ARE TRADEMARKS OR REGISTERED TRADEMARKS OF VERTIV GROUP CORPORATION THIS DOCUMENT (AND THE INFORMATION IT CONTAINS) ARE THE PROPERTY OF VERTIV GROUP CORPORATION BY ACCEPTING IT INTO YOUR POSSESSION, YOU AGREE THAT YOU WILL KEEP THIS DOCUMENT AND ALL INFORMATION CONTAINED HEREIN IN STRICTEST CONFIDENCE AND WILL NOT COPY, RETRANSMIT,USE (EXCEPT SOLELY FOR THE BENEFIT OF VERTIV GROUP CORPORATION), SELL, LEND, OR OTHERWISE DISPOSE OF SAME, DIRECTLY OR INDIRECTLY, WITHOUT THE EXPRESS WRITTEN PERMISSION OF VERTIV GROUP CORPORATION, AND THIS DOCUMENT SHALL BE RETURNED TO VERTIV GROUP CORPORATION IMMEDIATELY UPON REQUEST.
CHANGE NO.	APPROVED BY: Gmerek, Mike	
PAGE DESCRIPTION: 4.c- LED&Micro Switch wiring diagram		TITLE / DESCRIPTION: Vertiv™ SmartRow™ 2: 2x IT Rack 10kW With Fire Suppression System

DWG NO. SR2N02010PAA2
DATE (LATEST REV.)
REVISION:
505 N. CLEVELAND AVE WESTERVILLE OH 43081

SR2N02010PAA2-SUBTL
Revision: Rev C
Author: Tomáš Krech
Date: 7/4/2025

Fans & THDs -SR2-FSS for 10k (2*ITRack)

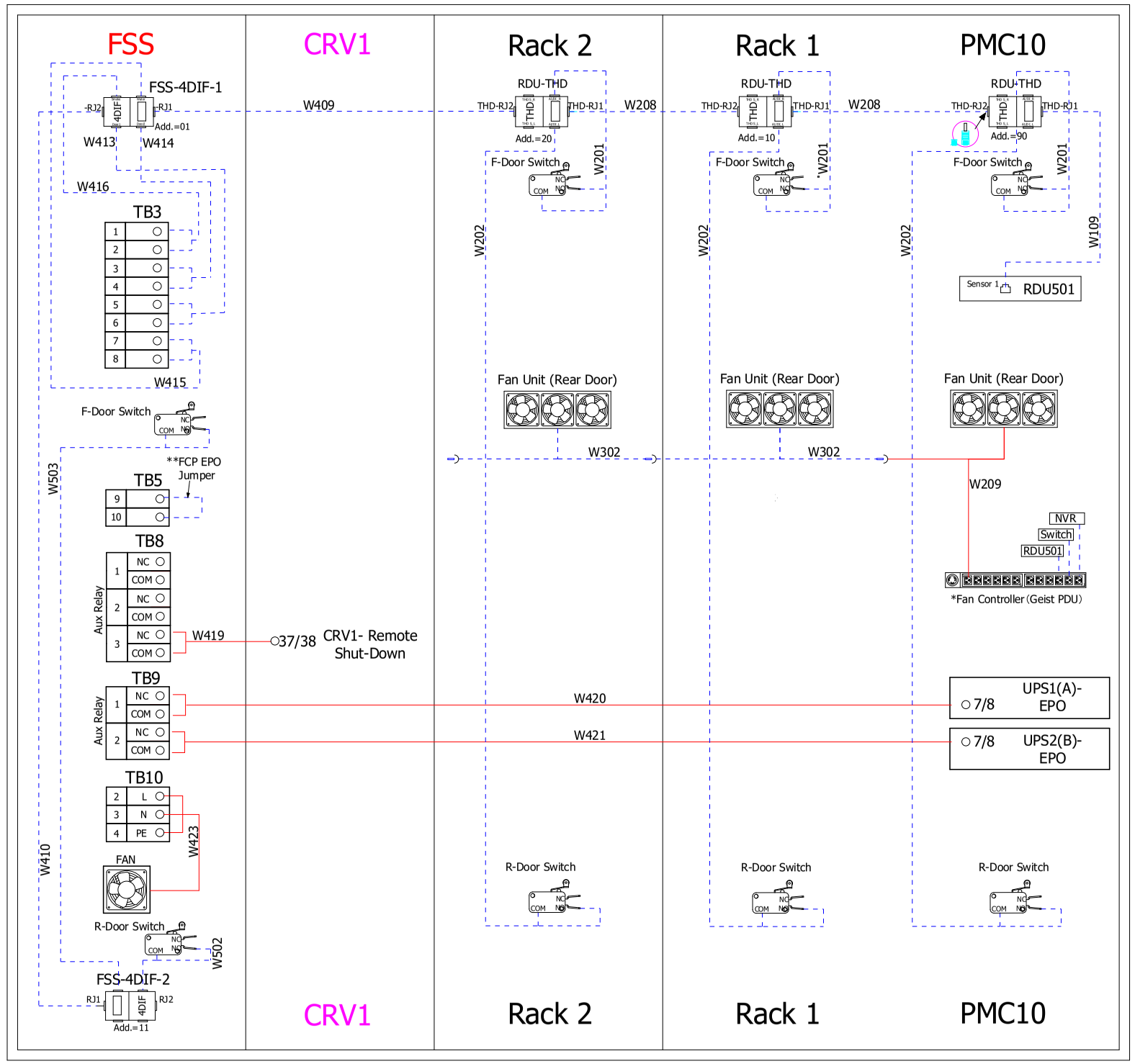

Rear View

Note :- *Fan controller port 1 reserved for emergency fans. Positions 1 is on the left when viewed from the rear.
**Fire control panel (FPC) UPS EPO jumper remove to deactivate.

- Factory connected cables
- Cables connected at assembly
- Cables made on-site

SHEET NO. 11 / 14	DRAWN BY: Nilesh Patil	© 2020 VERTIV GROUP CORPORATION CONFIDENTIAL AND PROPRIETARY. ALL RIGHTS RESERVED.VERTIV AND THE VERTIV LOGO ARE TRADEMARKS OR REGISTERED TRADEMARKS OF VERTIV GROUP CORPORATION THIS DOCUMENT (AND THE INFORMATION IT CONTAINS) ARE THE PROPERTY OF VERTIV GROUP CORPORATION BY ACCEPTING IT INTO YOUR POSSESSION, YOU AGREE THAT YOU WILL KEEP THIS DOCUMENT AND ALL INFORMATION CONTAINED HEREIN IN STRICTEST CONFIDENCE AND WILL NOT COPY, RETRANSMIT,USE (EXCEPT SOLELY FOR THE BENEFIT OF VERTIV GROUP CORPORATION), SELL, LEND, OR OTHERWISE DISPOSE OF SAME, DIRECTLY OR INDIRECTLY, WITHOUT THE EXPRESS WRITTEN PERMISSION OF VERTIV GROUP CORPORATION, AND THIS DOCUMENT SHALL BE RETURNED TO VERTIV GROUP CORPORATION IMMEDIATELY UPON REQUEST.	DWG NO. SR2N02010PAA2	
CHANGE NO.	APPROVED BY: Gmerek, Mike		DATE (LATEST REV.)	
PAGE DESCRIPTION: 4.d- FSS, THD& Emergency Fan wiring diagram		TITLE / DESCRIPTION: Vertiv™ SmartRow™ 2: 2x IT Rack 10kW With Fire Suppression System	REVISION:	505 N. CLEVELAND AVE WESTERVILLE OH 43081

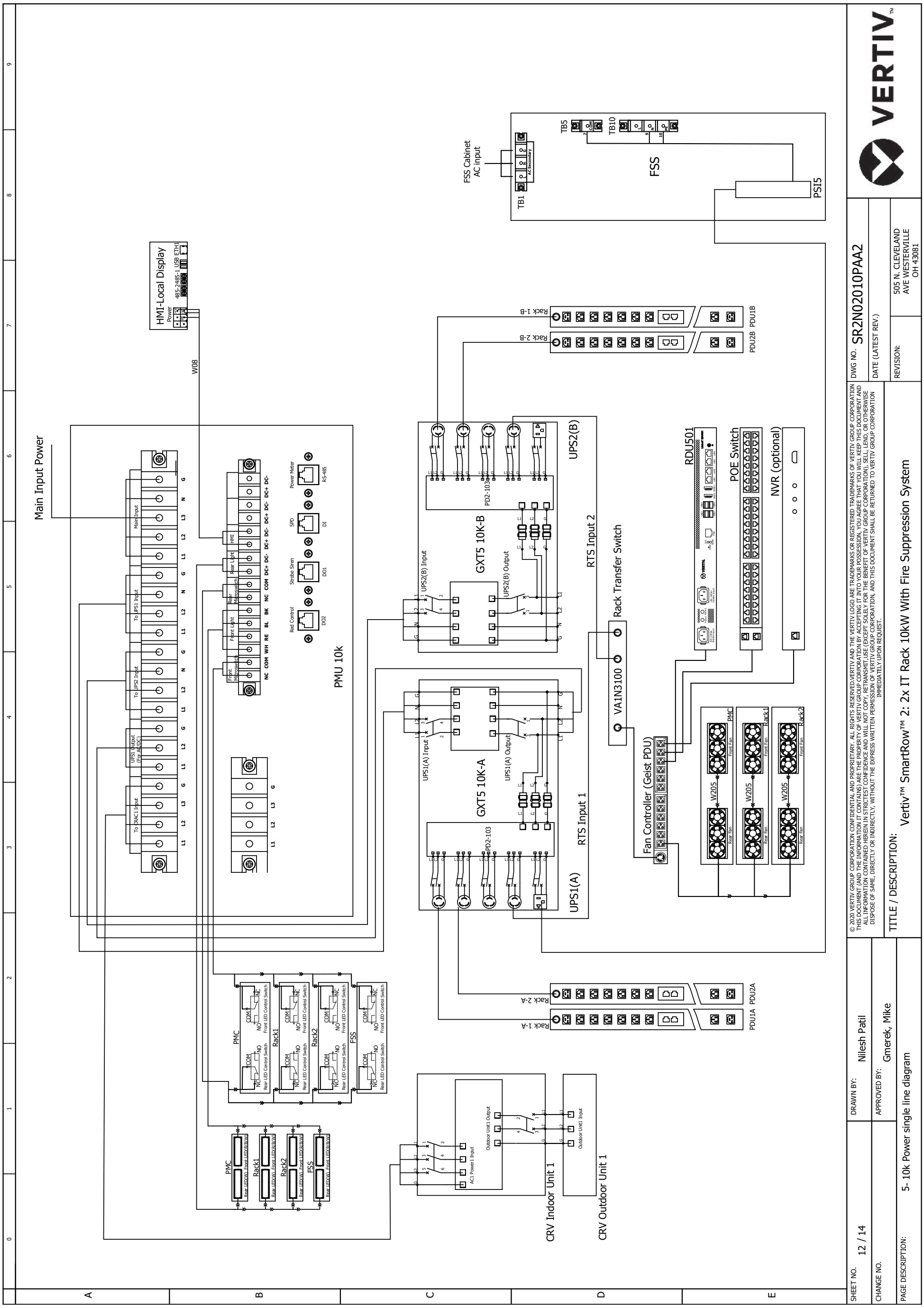
Main Input Power
HMI-Local Display
Power
485-2
485-1
USB
ETH1
W08
PMU 10k
To FRAC1 Input
UPS1 Output (For AC/DC)
To UPS2 Input
To UPS1 Input
Main Input
Front Microswitch
Front Light
Rear Microswitch
Rear Light
HMI
Red Control
Strobe Siren
SRD
Power Meter
RS-485
DO2
DO1
DI
FSS Cabinet AC input
TB1
AC Secondary
TB5
TB10
FSS
PSI5
Rack 1-B
Rack 2-B
PDU2B
PDU1B
Rack 2-A
Rack 1-A
PDU2A
PDU1A
UPS2(B)
PD2-103
GXT5 10K-B
UPS2(B) Input
UPS2(B) Output
RTS Input 2
Rack Transfer Switch
VA1N3100
RDU501
POE Switch
NVR (optional)
UPS1(A)
GXT5 10K-A
UPS1(A) Input
UPS1(A) Output
RTS Input 1
Fan Controller (Geist PDU)
W205
PMC
Rack1
Rack2
Front Fan
Rear Fan
Rear LED/W1 Front LED/R/B/W1
Front LED Control Switch
Rear LED Control Switch
COM
NO
NC
FSS
CRV Indoor Unit 1
CRV Outdoor Unit 1
AC1 Power1 Input
Outdoor Unit1 Output
Outdoor Unit1 Input
VERTIV
DWG NO. SR2N02010PAA2
DATE (LATEST REV.)
REVISION:
505 N. CLEVELAND AVE WESTERVILLE OH 43081
© 2020 VERTIV GROUP CORPORATION CONFIDENTIAL AND PROPRIETARY. ALL RIGHTS RESERVED.VERTIV AND THE VERTIV LOGO ARE TRADEMARKS OR REGISTERED TRADEMARKS OF VERTIV GROUP CORPORATION THIS DOCUMENT (AND THE INFORMATION IT CONTAINS) ARE THE PROPERTY OF VERTIV GROUP CORPORATION BY ACCEPTING IT INTO YOUR POSSESSION, YOU AGREE THAT YOU WILL KEEP THIS DOCUMENT AND ALL INFORMATION CONTAINED HEREIN IN STRICTEST CONFIDENCE AND WILL NOT COPY, RETRANSMIT, USE (EXCEPT SOLELY FOR THE BENEFIT OF VERTIV GROUP CORPORATION), SELL, LEND, OR OTHERWISE DISPOSE OF SAME, DIRECTLY OR INDIRECTLY, WITHOUT THE EXPRESS WRITTEN PERMISSION OF VERTIV GROUP CORPORATION, AND THIS DOCUMENT SHALL BE RETURNED TO VERTIV GROUP CORPORATION IMMEDIATELY UPON REQUEST.
TITLE / DESCRIPTION:
Vertiv™ SmartRow™ 2: 2x IT Rack 10kW With Fire Suppression System
SHEET NO. 12 / 14
DRAWN BY: Nilesh Patil
CHANGE NO.
APPROVED BY: Gmerek, Mike
PAGE DESCRIPTION: 5- 10k Power single line diagram

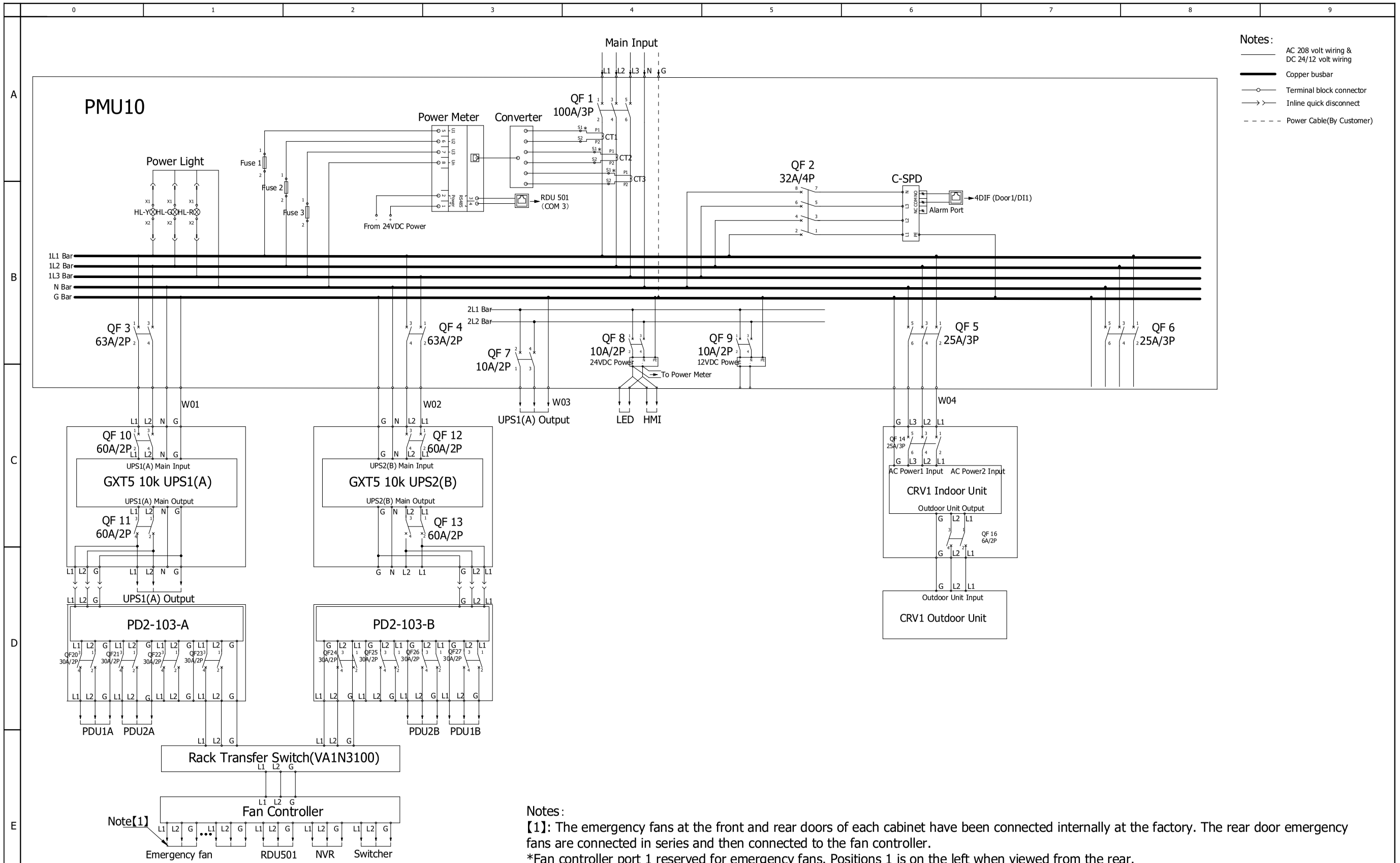

Notes:

【1】: The emergency fans at the front and rear doors of each cabinet have been connected internally at the factory. The rear door emergency fans are connected in series and then connected to the fan controller.

*Fan controller port 1 reserved for emergency fans. Positions 1 is on the left when viewed from the rear.

SHEET NO. 13 / 14	DRAWN BY: Nilesh Patil	© 2020 VERTIV GROUP CORPORATION CONFIDENTIAL AND PROPRIETARY. ALL RIGHTS RESERVED.VERTIV AND THE VERTIV LOGO ARE TRADEMARKS OR REGISTERED TRADEMARKS OF VERTIV GROUP CORPORATION THIS DOCUMENT (AND THE INFORMATION IT CONTAINS) ARE THE PROPERTY OF VERTIV GROUP CORPORATION BY ACCEPTING IT INTO YOUR POSSESSION, YOU AGREE THAT YOU WILL KEEP THIS DOCUMENT AND ALL INFORMATION CONTAINED HEREIN IN STRICTEST CONFIDENCE AND WILL NOT COPY, RETRANSMIT,USE (EXCEPT SOLELY FOR THE BENEFIT OF VERTIV GROUP CORPORATION), SELL, LEND, OR OTHERWISE DISPOSE OF SAME, DIRECTLY OR INDIRECTLY, WITHOUT THE EXPRESS WRITTEN PERMISSION OF VERTIV GROUP CORPORATION, AND THIS DOCUMENT SHALL BE RETURNED TO VERTIV GROUP CORPORATION IMMEDIATELY UPON REQUEST.	DWG NO. SR2N02010PAA2	
CHANGE NO.	APPROVED BY: Gmerek, Mike		DATE (LATEST REV.)	
PAGE DESCRIPTION: 6- 10k System Schematic Diagram		TITLE / DESCRIPTION: Vertiv™ SmartRow™ 2: 2x IT Rack 10kW With Fire Suppression System	REVISION:	505 N. CLEVELAND AVE WESTERVILLE OH 43081

SR2N02010PAA2-SUBTL
Revision: Rev C
Author: Tomáš Krech
Date: 7/4/2025

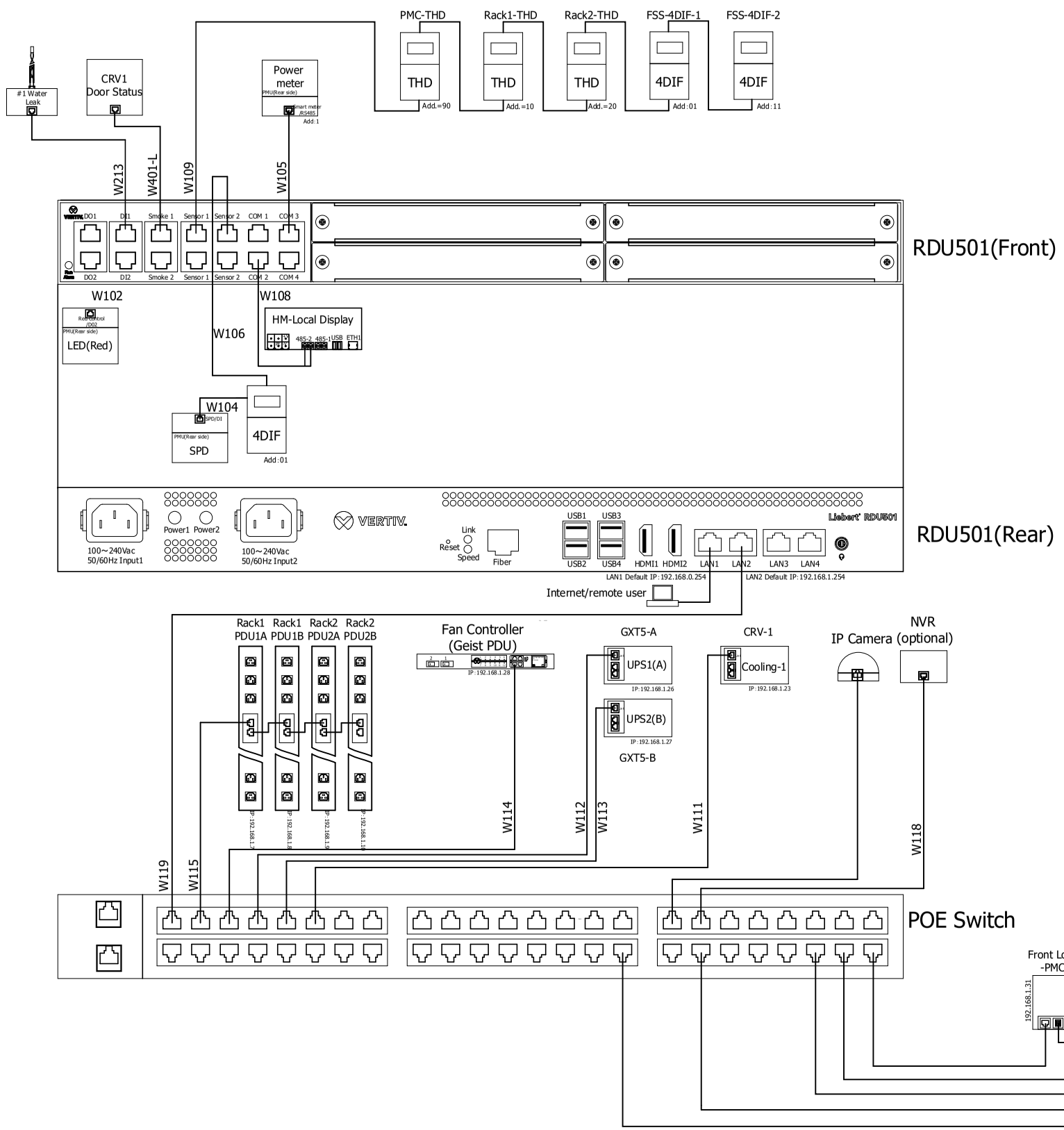

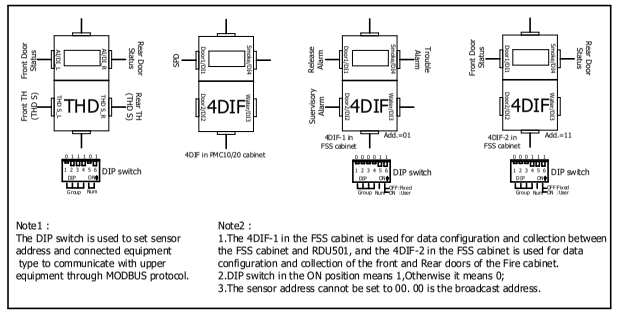

Note1 :
The DIP switch is used to set sensor address and connected equipment type to communicate with upper equipment through MODBUS protocol.

Note2 :
1.The 4DIF-1 in the FSS cabinet is used for data configuration and collection between the FSS cabinet and RDU501, and the 4DIF-2 in the FSS cabinet is used for data configuration and collection of the front and Rear doors of the Fire cabinet.
2.DIP switch in the ON position means 1,Otherwise it means 0;
3.The sensor address cannot be set to 00. 00 is the broadcast address.

THD Sensors Dial Code Address Setting table (THD-Temperature and Humidity sensors)

	Group Number	Sequence Number	Address
Cabinets	DIP1 ~ DIP4	DIP5 ~ DIP6	
PMC -THD (factory default)	1 0 0 1	0 0	90
Rack 1-THD	0 0 0 1	0 0	10
Rack 2-THD	0 0 1 0	0 0	20

4DIF Sensors Dial Code Address Setting table (set in factory)

	Group Number	Sequence Number	Sequence Number	Address
Cabinets	DIP1 ~ DIP4	DIP5	DIP6	
PMC-4DIF & FSS-4DIF-1 (factory default)	0 0 0 0	1	User	01 User equipment
FSS-4DIF-2	0 0 0 1	1	User	11 User Equipment

Intelligent Lock of PMC/CRV/ITRack add. setting(front&rear)

Name	Add.(Front&Rear)	Name	Add.(Front&Rear)
PMC Locks	192.168.1.31	FSS Locks	192.168.1.43
CRV1 Locks	192.168.1.40		
ITRack 1 Locks	192.168.1.32		
ITRack 2 Locks	192.168.1.33		

SHEET NO. 14 / 14	DRAWN BY: Nilesh Patil	DWG NO. SR2N02010PAA2	
CHANGE NO.	APPROVED BY: Gmerek, Mike	DATE (LATEST REV.)	
PAGE DESCRIPTION: 7- Monitoring system diagram	TITLE / DESCRIPTION: Vertiv™ SmartRow™ 2: 2x IT Rack 10kW With Fire Suppression System	REVISION:	505 N. CLEVELAND AVE WESTERVILLE OH 43081

© 2020 VERTIV GROUP CORPORATION CONFIDENTIAL AND PROPRIETARY. ALL RIGHTS RESERVED.VERTIV AND THE VERTIV LOGO ARE TRADEMARKS OR REGISTERED TRADEMARKS OF VERTIV GROUP CORPORATION THIS DOCUMENT (AND THE INFORMATION IT CONTAINS) ARE THE PROPERTY OF VERTIV GROUP CORPORATION BY ACCEPTING IT INTO YOUR POSSESSION, YOU AGREE THAT YOU WILL KEEP THIS DOCUMENT AND ALL INFORMATION CONTAINED HEREIN IN STRICTEST CONFIDENCE AND WILL NOT COPY, RETRANSMIT,USE (EXCEPT SOLELY FOR THE BENEFIT OF VERTIV GROUP CORPORATION), SELL, LEND, OR OTHERWISE DISPOSE OF SAME, DIRECTLY OR INDIRECTLY, WITHOUT THE EXPRESS WRITTEN PERMISSION OF VERTIV GROUP CORPORATION, AND THIS DOCUMENT SHALL BE RETURNED TO VERTIV GROUP CORPORATION IMMEDIATELY UPON REQUEST.

4. Field Supplied Cable & Part List

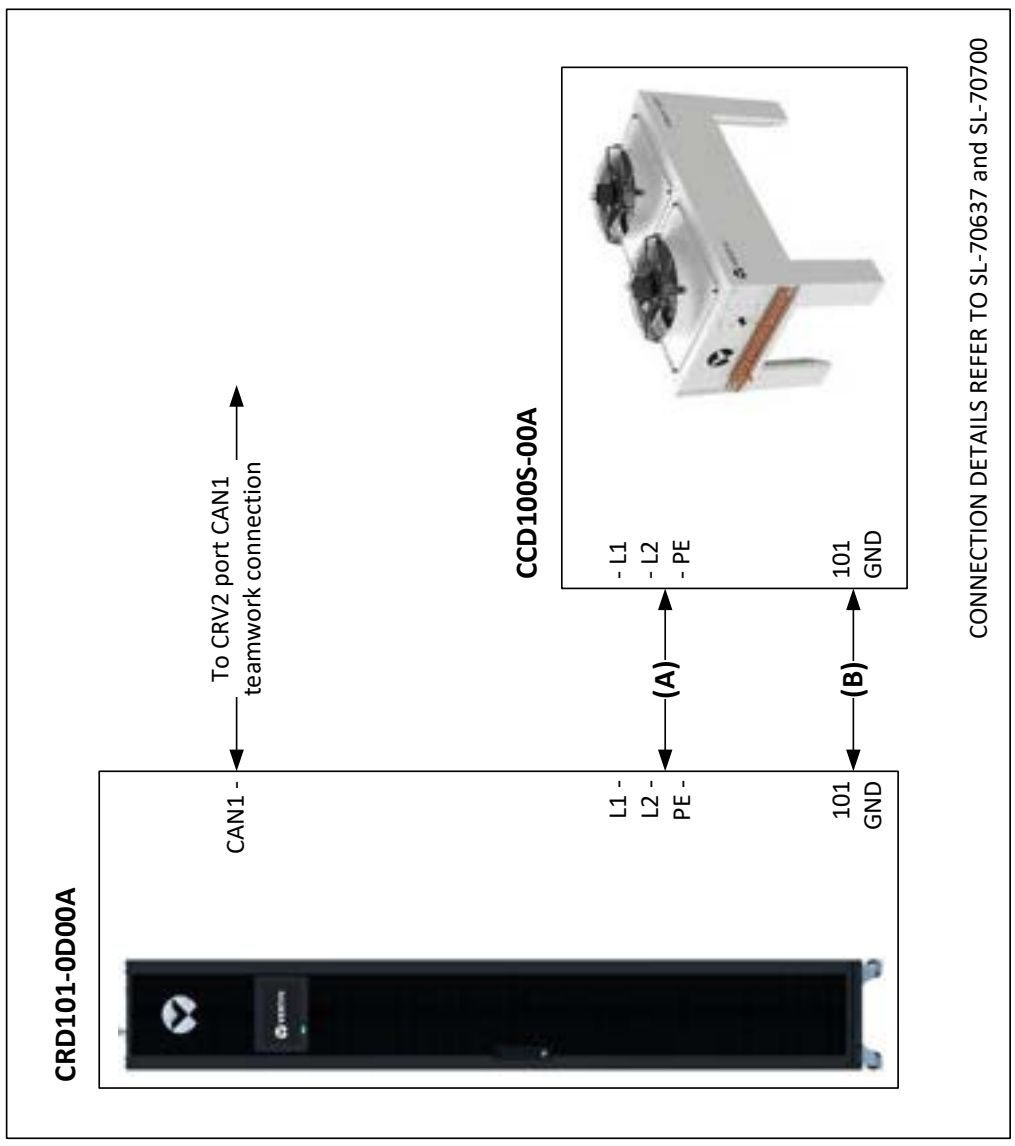

FIELD SUPPLIED CABLE & PART LIST

PART	DETAILS
CONDENSER POWER SUPPLY CABLE (A)	2 conductors + PE, 16AWG or greater
FAN SPEED CONTROL (B)	2 conductors, 22AWG or greater
CONDENSATE PUMP TUBE	NPT 1/2 in. Female copper threaded jount for the tube connection

© 2020 VERTIV GROUP CORPORATION CONFIDENTIAL AND PROPRIETARY. ALL RIGHTS RESERVED.VERTIV AND THE VERTIV LOGO ARE TRADEMARKS OR REGISTERED TRADEMARKS OF VERTIV GROUP CORPORATION THIS DOCUMENT (AND THE INFORMATION IT CONTAINS) ARE THE PROPERTY OF VERTIV GROUP CORPORATION BY ACCEPTING IT INTO YOUR POSSESSION, YOU AGREE THAT YOU WILL KEEP THIS DOCUMENT AND ALL INFORMATION CONTAINED HEREIN IN STRICTEST CONFIDENCE AND WILL NOT COPY, RETRANSMIT,USE (EXCEPT SOLELY FOR THE BENEFIT OF VERTIV GROUP CORPORATION), SELL, LEND, OR OTHERWISE DISPOSE OF SAME, DIRECTLY OR INDIRECTLY, WITHOUT THE EXPRESS WRITTEN PERMISSION OF VERTIV GROUP CORPORATION, AND THIS DOCUMENT SHALL BE RETURNED TO VERTIV GROUP CORPORATION IMMEDIATELY UPON REQUEST.

SHEET NO. 1 / 1
DRAWN BY: Petr Harant
APPROVED BY: Tomáš Krech
CHANGE NO.
PAGE DESCRIPTION:
TITLE / DESCRIPTION: **FIELD SUPPLIED CABLE & PART LIST**
DWG NO.
DATE (LATEST REV.) 30.05.2024
REVISION:
505 N. CLEVELAND AVE WESTERVILLE OH 43081

5. Vertiv MSR2 600mm IT Rack

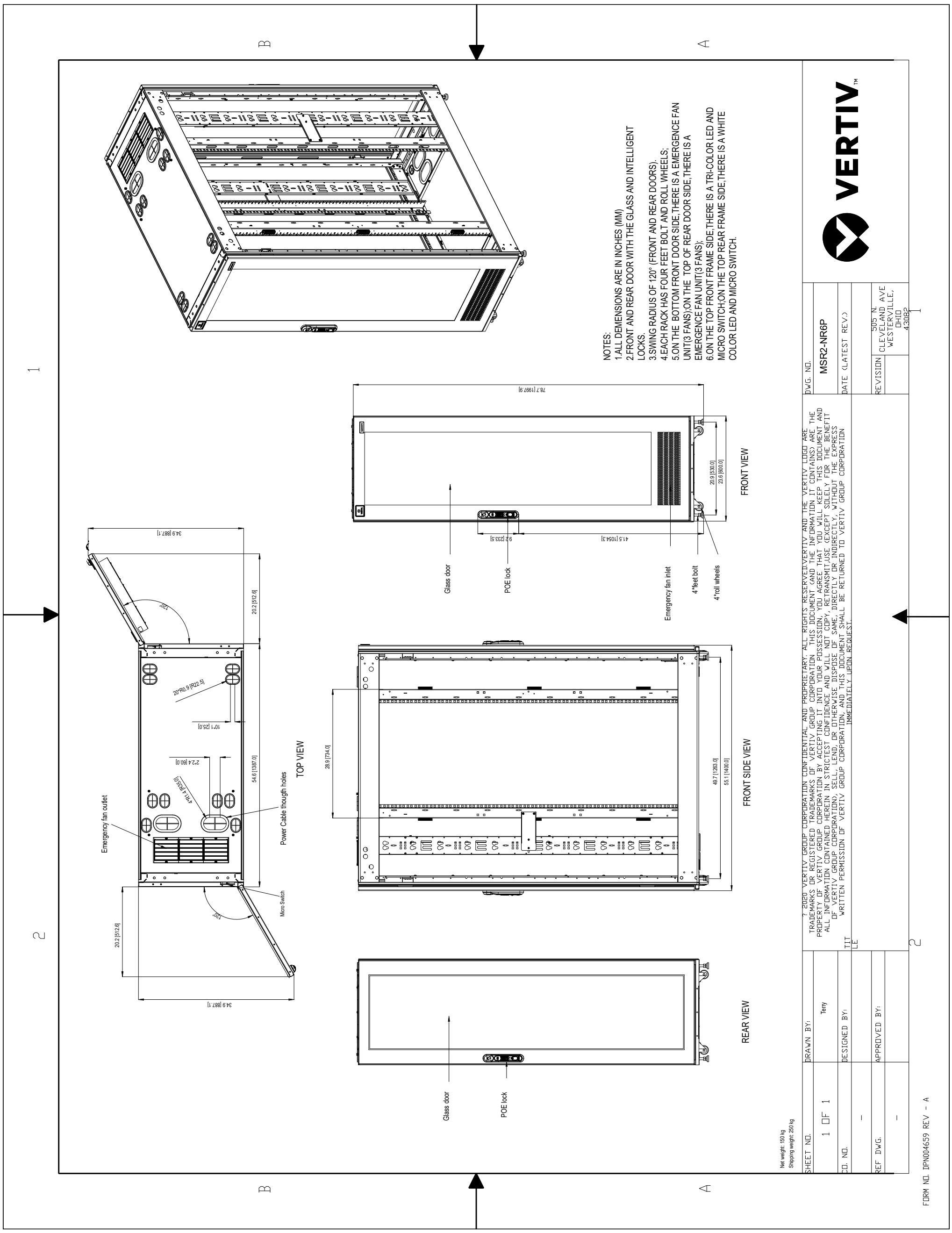

6. Vertiv MSR2 Power Management Cabinet (PMC)

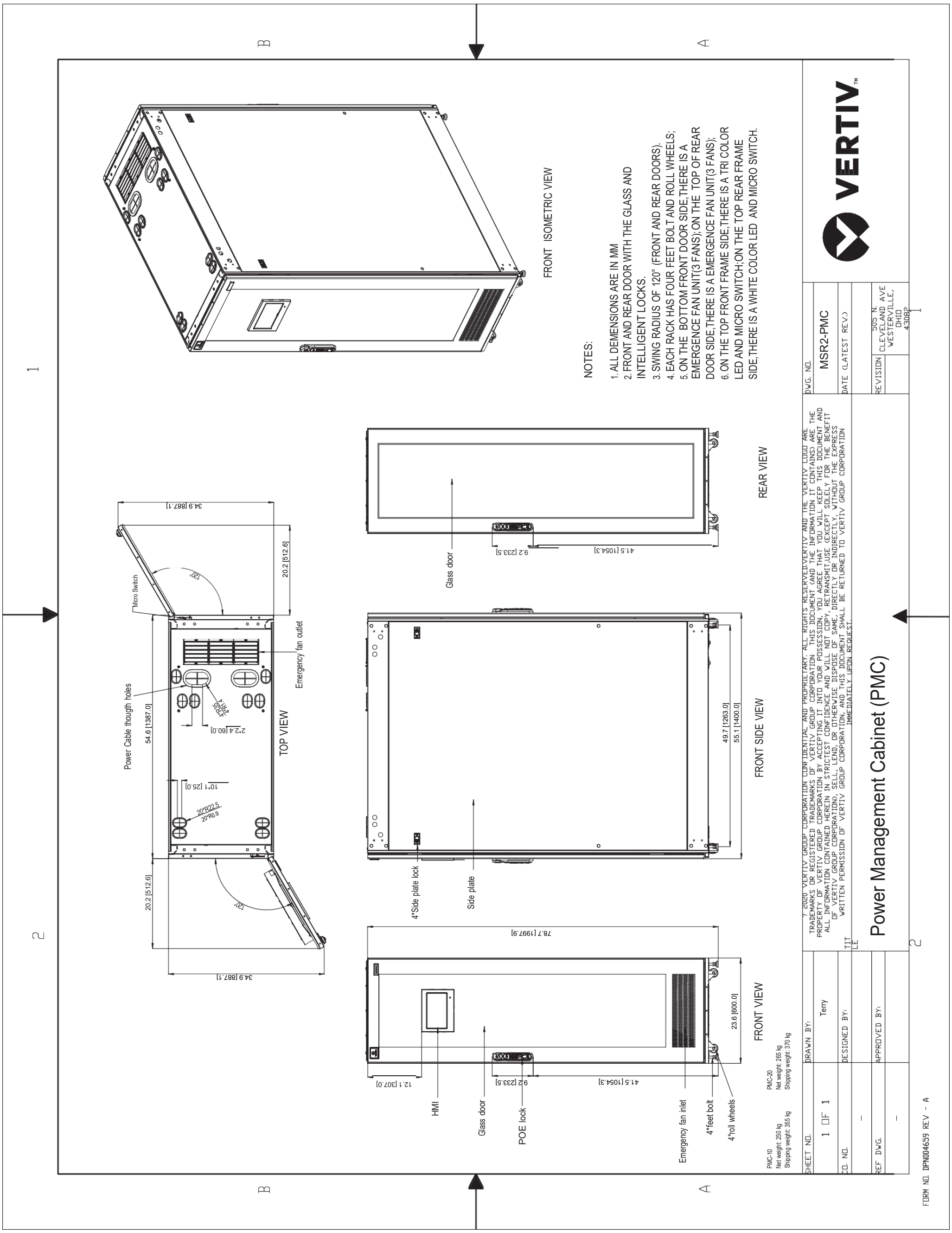

7. Vertiv Liebert CRD10 with Plenums

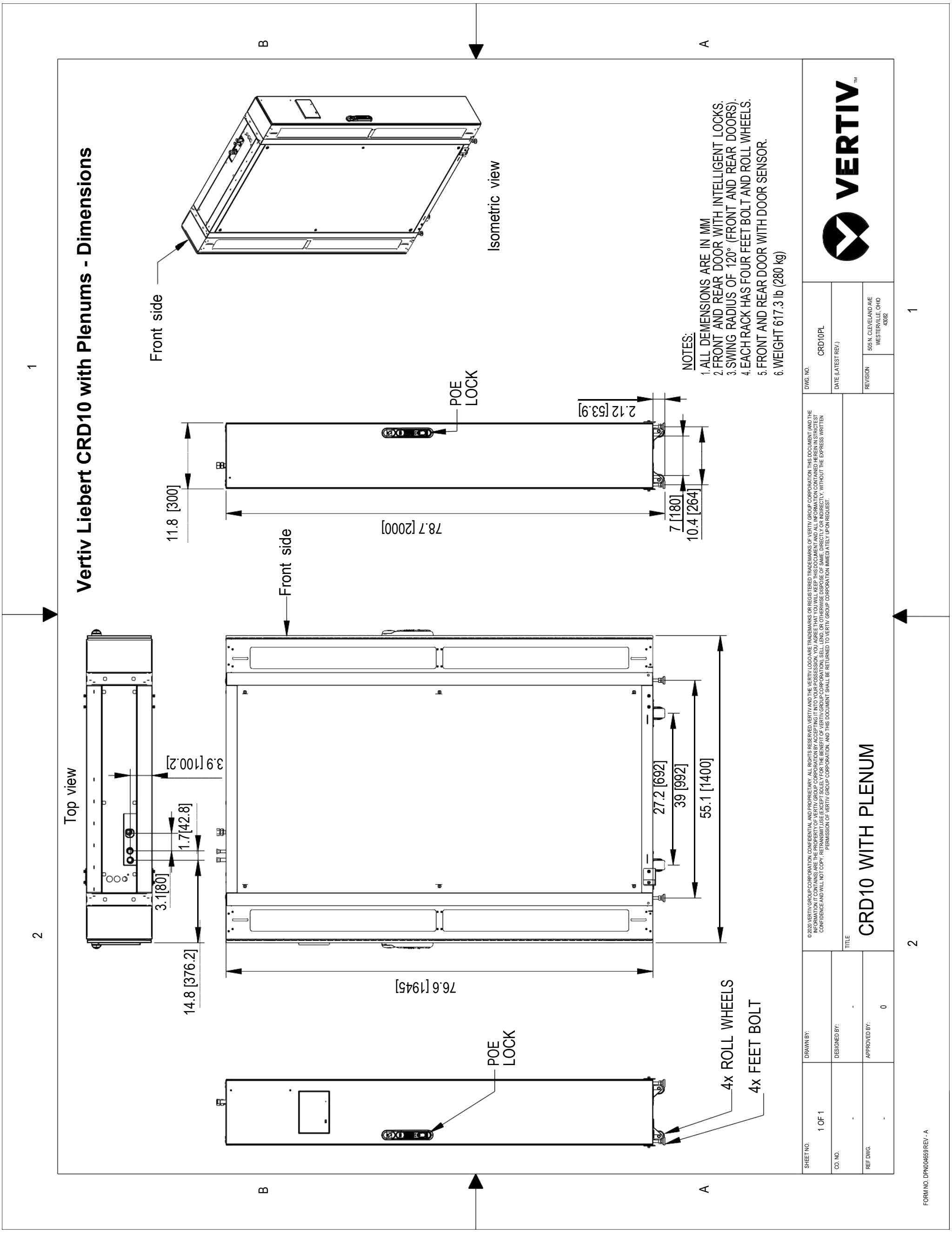

8. Vertiv MSR2 Fire Suppression System (FSS)

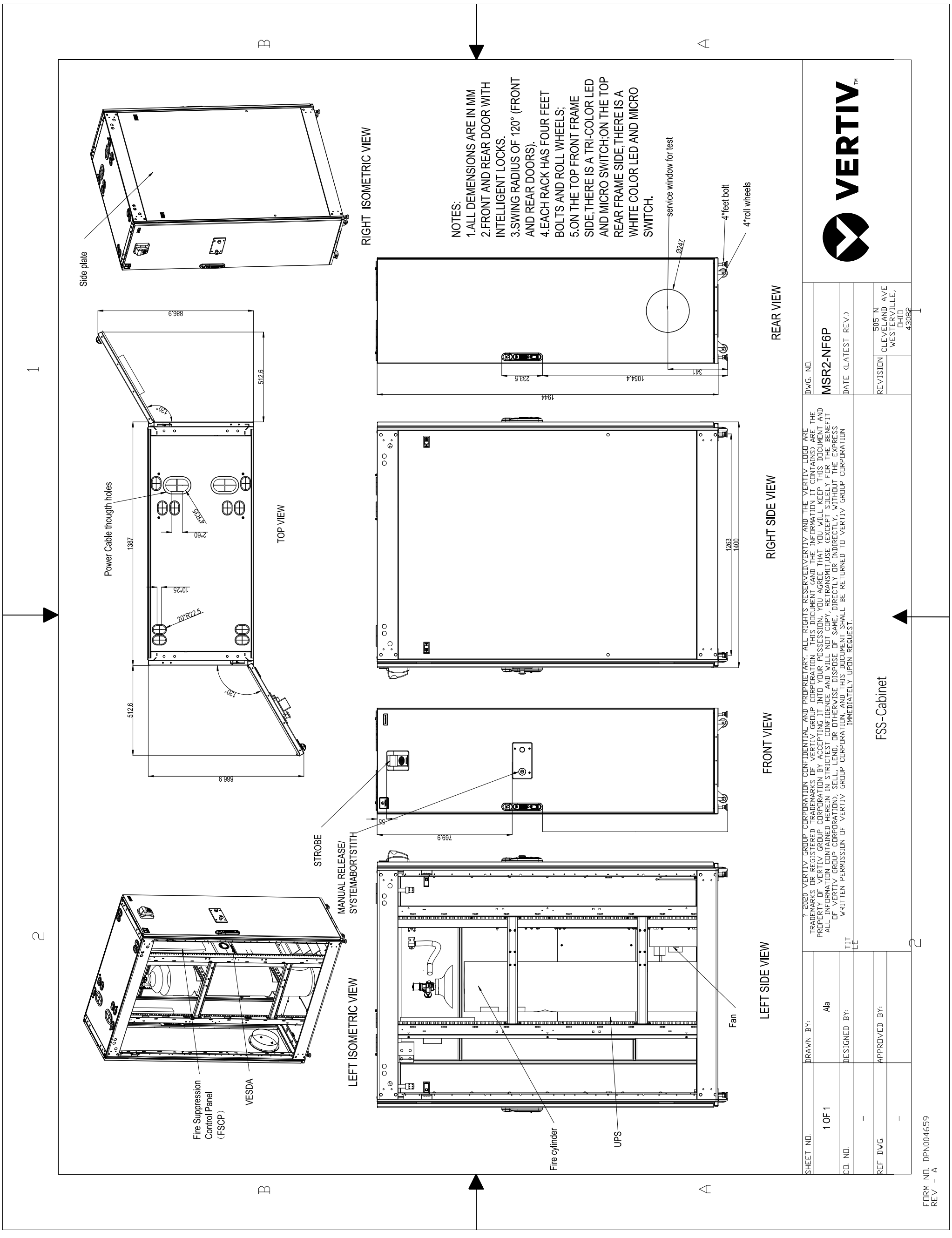

9. Power Management Unit - 10kW (PMU10)

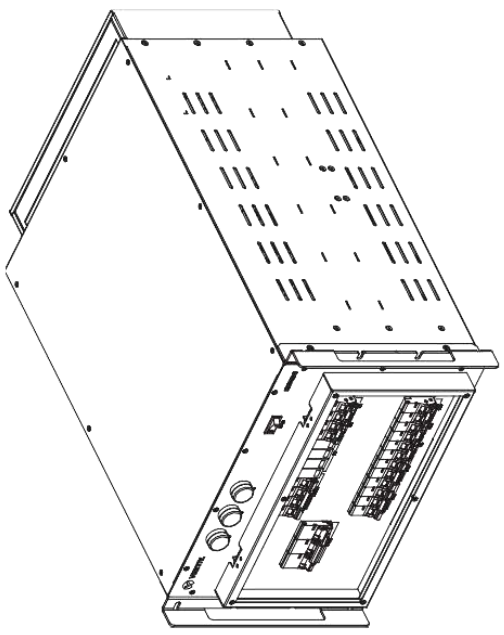

NO.	NAME	Qty	REMARK
20	GROUND SCREWS	1	
19	POWER METER RS485(RJ45)	1	
18	SPD DI(RJ45)	1	
17	STOBE SIREN CONTROL DO1(RJ45) RED	1	
16	CONTROL DO2(RJ45)	1	
15	DC POWER TERMINAL BLOCKS	1	
14	TO CRV2 POWER TERMINAL BLOCKS	1	
13	POWER TERMINAL BLOCKS	1	
12	24VDC BREAKER	1	
11	12VDC BREAKER	1	
10	AC/DC BREAKER	1	
9	CRV2 BREAKER	1	
8	CRV1 BREAKER	1	
7	MAIN INPUT BREAKER	1	
6	UPS2 INPUT BREAKER	1	
5	UPS1 INPUT BREAKER	1	
4	BOATLIKE SWITCH FOR BLUE	1	
3	LIGHT SPD	1	
2	SPD BREAKER	1	
1	POWER LIGHT(L1/L2/L3)	3	

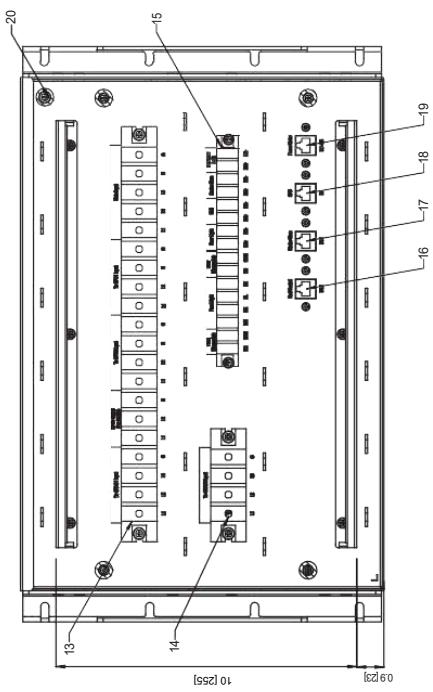

REAR VIEW
(PMU COVER REMOVED)

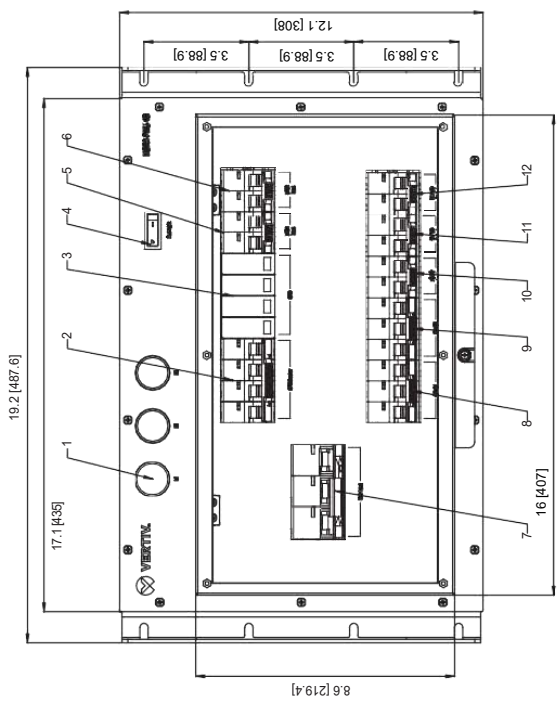

FRONT VIEW

NOTES:

PMU10 is used in Power Redundancy and No Power Redundancy PMC Net

weight: 36 kg

© 2020 VERTIV GROUP CORPORATION CONFIDENTIAL AND PROPRIETARY. ALL RIGHTS RESERVED.VERTIV AND THE VERTIV LOGO ARE TRADEMARKS OR REGISTERED TRADEMARKS OF VERTIV GROUP CORPORATION. THIS DOCUMENT (AND THE INFORMATION IT CONTAINS) ARE THE PROPERTY OF VERTIV GROUP CORPORATION BY ACCEPTING IT INTO YOUR POSSESSION, YOU AGREE THAT YOU WILL KEEP THIS DOCUMENT AND ALL INFORMATION CONTAINED HEREIN IN STRICTEST CONFIDENCE AND WILL NOT COPY, RETRANSMIT,USE (EXCEPT SOLELY FOR THE BENEFIT OF VERTIV GROUP CORPORATION), SELL, LEND, OR OTHERWISE DISPOSE OF SAME, DIRECTLY OR INDIRECTLY, WITHOUT THE EXPRESS WRITTEN PERMISSION OF VERTIV GROUP CORPORATION, AND THIS DOCUMENT SHALL BE RETURNED TO VERTIV GROUP CORPORATION IMMEDIATELY UPON REQUEST.

DWG. NO. PMU10
DATE (LATEST REV.)
REVISION
505 N. CLEVELAND AVE WESTERVILLE, OHIO 43082

SHEET NO. 1 OF 2
DRAWN BY: Terry
CO. NO. –
DESIGNED BY:
REF DWG. –
APPROVED BY:
TITLE Power Management Unit - 10kW (PMU10)

FORM NO. DPN004659 REV - A

10. PMU10 Terminal Blocks Size

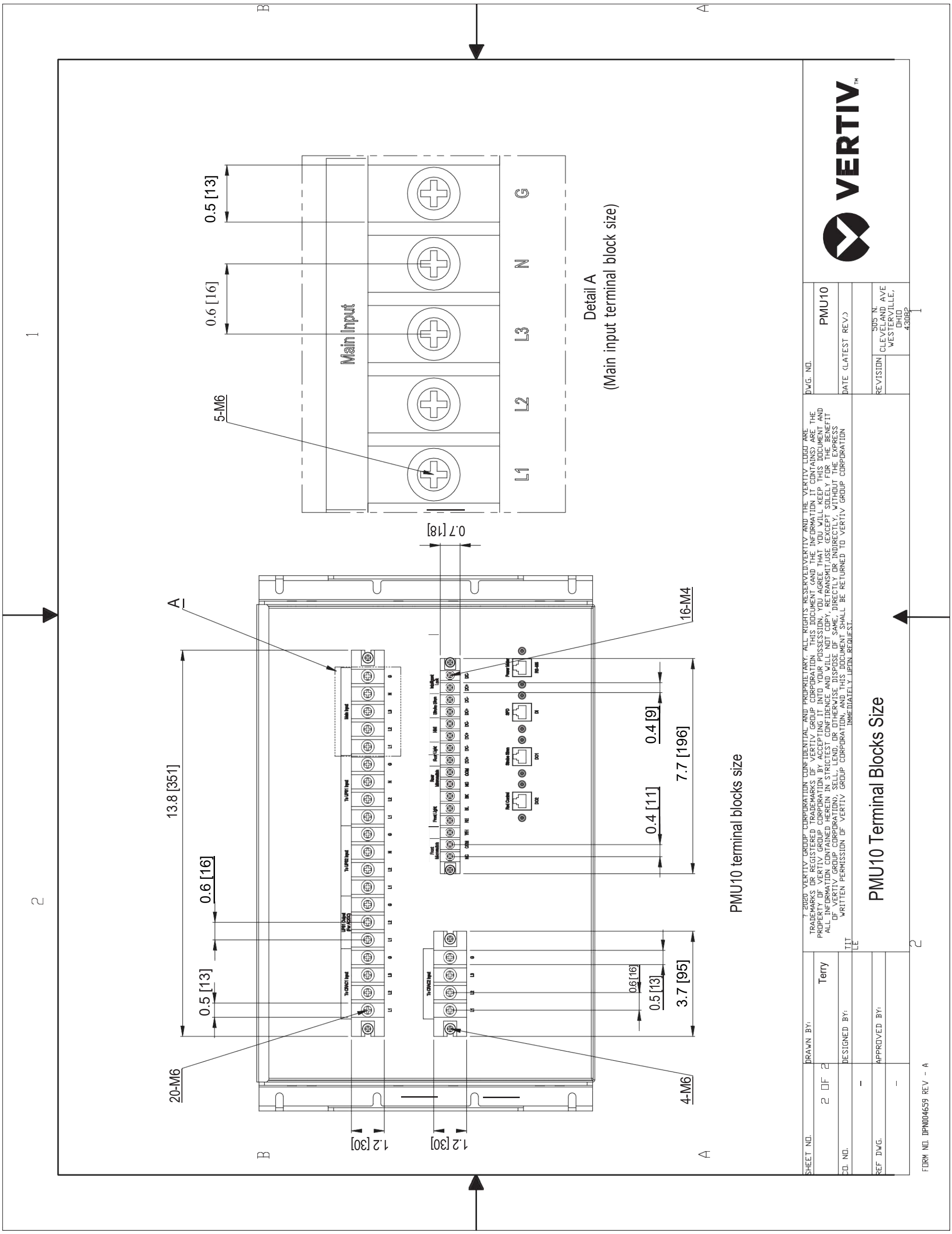

11. Vertiv MSR2 - CT600 Cable Tray 600mm

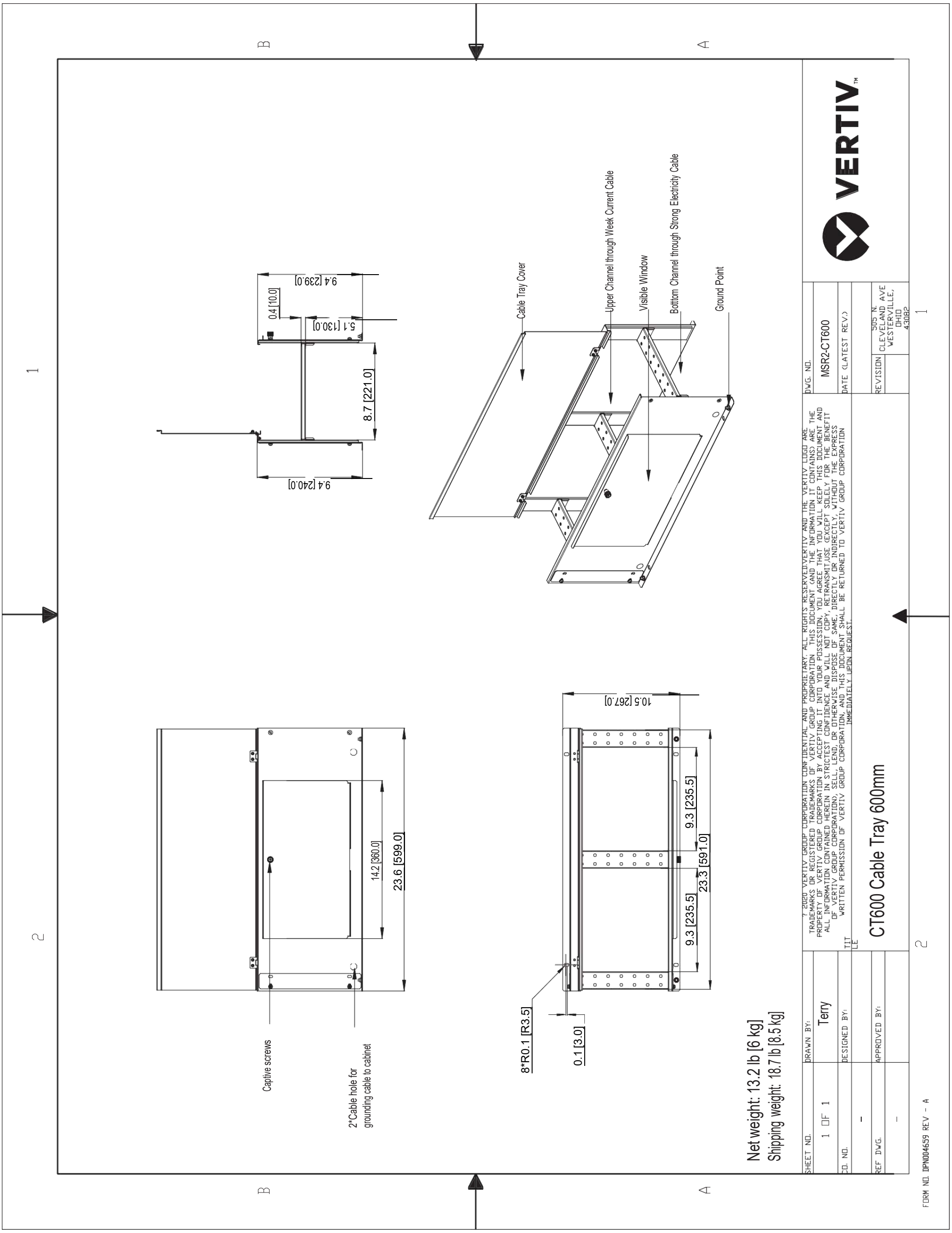

12. SCOPE OF WORK

SMART ROW 2 – ASSEMBLY & START-UP

SERVICE SUMMARY

Feature	Detail
On-site Service	One site trip within the 48 contiguous states to start-up the system. Visit to be scheduled by the customer between 8am-5pm, Monday-Friday (excluding national holidays).
Customer Support	Includes access to the Customer Resolution Center (1-800-543-2378) and the Vertiv Customer Services Network Online Internet portal for extent of product warranty.
Consolidation	The SmartRow2 includes numerous shippable units (typically pallets or boxes) that originate from multiple factories and suppliers. Vertiv consolidates these items into a single customer shipment and reduces the likelihood of shippable units being lost at the customer site. This benefits the customer by relieving the burden of keeping track of multiple partial shipments.
Inside Delivery	Vertiv Service will move the shippable units from the delivery truck to the Staging Area. Vertiv Services will unpackage the shippable units and remove/dispose of the packaging material so that it is ready for assembly. Vertiv will verify that all material on the sales order has been received.
Project Management	Included with Consolidation and Inside Delivery. Vertiv will assign a project manager for the project. The Project Manager will supervise the Consolidation and Inside Delivery Process and communicate hardware shipment schedules with the customer.
Assembly	SmartRow2 is assembled onsite by Vertiv factory-trained and authorized technicians equipped with Vertiv. Proprietary tools and software. Vertiv CEs and Vertiv Partners are the only approved OEM service providers for Vertiv products. These technicians are supervised by a Site Manager who also gathers site- specific requirements like safety and work procedures.
Factory Startup	Warranty inspection and startup validates the warranty and initializes the warranty coverage period.

SERVICE PERFORMED

Consolidated Shipment

Shippable units may be available at time of order or built-to-order with a lead time. Vertiv safely stores these items in-warehouse until the customer is ready to receive the SmartRow2 in a single shipment. Other limits may apply; see Assumption and Clarifications as applicable for more details.

Inside Delivery

Vertiv Services will deliver the shippable units from the delivery truck to the Staging Area. Vertiv Services will unpackage the shippable units and remove/dispose of the packaging material so that it is ready for assembly. Vertiv will verify that all material has been received.

Change order option:

- There must be an appropriate loading dock with continuous, level floor from the dock to the staging area. If the shippable units must be moved up/downstairs, the customer must provide a suitable elevator, or charges for special rigging will be incurred. If the customer does not have an appropriate loading dock, nominal charges may/may-not apply for a lift-truck delivery.

Project Management

Vertiv will assign a project manager and a site manager for the project.

The Project Manager will supervise the Consolidation and Inside Delivery Process and communicate schedules with the customer.

The Site Manager will supervise the assembly, startup, warranty inspection and turn over the SmartRow2 to the customer.

Site-Specific Requirements

All personnel will be available for up to two hours per week for Site Access, Safety Training, and other site-specific requirements.

Change Order Option:

- Vertiv can quote a price for additional man-hours if 2 hours per week is insufficient.

Assembly

There shall be continuous, level floor between the Staging Area and the Installation Location so that heavy items can be moved via casters/pallet jacks.

Change Order Option:

- If there is not continuous level floor, the customer must provide or pay for any necessary lift/rigging equipment.

Vertiv PMC, including RDU501 SmartRow2 Controller/Display

Vertiv will position, level, and bay together the PMC as described in the submittal documents. The customer is responsible for providing primary electrical power to the PMC.

Vertiv will program and configure the SmartRow2 RDU501 controller/display. This includes setting IP addresses so that the customer can monitor the system status remotely.

Change Order Option:

- Vertiv will quote IP addressing of equipment on the customer network, but this would be done by other personnel and scheduled separately. This is outside the scope of SmartRow2 assembly.

Vertiv IT Rack(s)

Vertiv will position, level, and bay together the Vertiv IT Racks as described in the submittal documents. Vertiv will not populate racks with customer IT gear, including blanking panels, servers, shelves, etc.

The customer must define addressing conventions (1,2,3,4, right-to-left or left-to-right) prior to start of work.

Cable Trays

Vertiv will install the SmartRow2 cable trays that are included with the SmartRow2 solution as described in the submittal documents.

Liebert® CRV's, Temperature Sensors, Modbus cables, and associated Plenums

Vertiv will position and level the Liebert® CRV and attach the associated plenums to provide cooling to the SmartRow2.

Vertiv will connect the necessary temperature sensors.

The customer is responsible for piping and primary power to the CRV along with connecting CANBus cable between the CRV and heat rejection. All specific requirements (such as piping traps and proper electrical grounding) for correct product installation are detailed in the product installation manual.

After the SmartRow2 is assembled and the Liebert® CRV is piped and powered by the customer in accordance with the product installation manual, Vertiv will perform a factory warranty inspection along with the rest of the SmartRow2.

Liebert® MC / CCD Condensers for Liebert® CRVs

The customer is responsible for installing the associated heat rejection. This includes primary power, CANBus communication wire, piping, refrigerant charging, and all other tasks in the Installation Manual. Any/all penetration points in the walls/ceilings/floors for any wiring or piping are also the customer's responsibility.

Rack PDUs

Vertiv will install and connect all rack PDUs (if applicable) including GXT5 power extensions (if applicable) as described in the submittal documents.

Liebert® GXT5 Single Phase UPS

Vertiv will install and connect all Liebert® GXT5 UPS's and connect power within the PMC cabinet and output to the PDUs as described in the submittal documents.

Additionally, Vertiv will install ancillary equipment such as Maintenance bypass and PD2-103 cabling and connectors if not already preinstalled.

After the SmartRow2 is assembled and Primary Power to the SmartRow2 is provided by the customer, Vertiv will perform factory startup of all GXT5 equipment along with the rest of the SmartRow2.

Switch

Vertiv will install and connect the switch within the PMC cabinet. as described in the submittal documents.

Firmware Updates

Vertiv will update firmware of any/all units to the current revision level. Shippable units are sourced globally, and firmware evolves as products may be in stock with prior revisions.

Wiring

Vertiv will run all necessary wiring for power and communication between cabinets as part of assembly. This includes setting IP/DIP switch settings for proper communication between the device and the PMC.

Accessories

The SmartRow2 is available with lights, door locks/sensors, temperature sensors that Vertiv will connect and install. Services associated with cameras are sold separately and out-of-scope for the SmartRow2 Assembly

RDU Monitor SmartRow2 mobile application.

Services associated with the RDU Monitor SmartRow2 mobile applications are quoted separately and out-of-scope for SmartRow2 assembly.

Fire Suppression Cabinet Assembly (if Applicable)

Vertiv will unpackage the Fire Suppression cabinet so that it is ready for installation.

Position level and bolt together the Fire Suppression cabinet to the adjoining cabinets.

Ensure all the wirings are connected, according to the information available in the submittal documents.

Install the piping in all the other cabinets in accordance with system drawings.

CUSTOMER RESPONSIBILITIES

In order to provide timely, accurate and thorough execution of the services described herein, Vertiv requests the following:

- Point of Contact: Provide an authorized point of contact(s), specific for the scope of work, for scheduling and coordination purposes.
- Scheduling: Make dates available for scheduling service. All visits must be requested 4 weeks in advance for assembly and 10 days for startup/warranty-inspection of need by contacting the Vertiv Project Manager. Site must be available for 5 consecutive business days. Customer may choose to pay for premium time if weekend work is necessary.
- Site Access: Prior to time of scheduled work, provide site access including any customer required escort, security clearance, safety training and badging for Vertiv personnel.
- Equipment Access: Convenient access to the equipment covered by the Scope of Work. Prior to scheduled time of work, notify Vertiv personnel of any special requirements for equipment access including lifts, ladders, etc.
- Shutdown: Service may require shutdown of load to ensure electrical connection integrity.
- Notification: If for any reason the work cannot be performed during scheduled time, notify Vertiv personnel 24-hours prior to scheduled event.
- Provide Method of Procedure (MOP) requirements/ templates, and required review period(s)

ASSUMPTIONS AND CLARIFICATIONS

- Vertiv will cover one month of storage costs as part of the consolidation service. If the original ship date is changed due to non-Vertiv delays, the customer is liable for any costs associated with the extended storage time.
- Vertiv start-up validates product warranty.
- Defects or damage resulting from installation not performed by Vertiv are not covered.
- Parts and Labor coverage is in accordance with Product Warranty. If a modified warranty is purchased, terms default to that specific package.
- Any customer site visit is limited to eight (8) hours per visit. Any time beyond forty (40) hours/wk or eight (8) hrs/day or additional Startup visits will be billed separately.
- Expenses incurred due to delays that are beyond the control of Vertiv may be billed at cost.
- Startup visit must be scheduled confirmation of proper installation (if Vertiv not involved with installation).
- This pricing excludes any load bank testing. This can also be quoted separately if required.
- Pricing excludes activities associated with 3rd party commissioning.
- Pricing excludes any type of circuit breaker NEMA testing. This can also be quoted separately if required.
- Customer/Installing contractor is responsible for providing elevated access as necessary.
- Any additional requests beyond the scope of this document will be billed separately by Vertiv.
- Vertiv will not perform physical changes to the site building (such as drilling holes, etc.)

TERMS AND CONDITIONS

Subject to all Terms & Conditions as noted in the Vertiv Terms & Conditions or the terms of a Master Agreement between the parties, if any, shall apply.

SCOPE OF WORK

SMART ROW 2 – FIRE SUPPRESSION

START-UP & OPTIONAL SERVICES

SERVICE SUMMARY

Feature	Detail
On-site Service	One site trip within the 48 contiguous states to start-up the system. Visit to be scheduled by the customer between 8am-5pm, Monday-Friday (excluding national holidays).
Service Professional	Performed by Vertiv factory-trained and authorized technician equipped with Vertiv Proprietary tools and software. Vertiv CEs and Vertiv Partners are the only approved OEM service providers for Vertiv products.
Permitting	Permits are the responsibility of the customer to see if one is required. Additional fees may apply and can vary based on the customer's location. (see Assumptions and Clarifications).
Optional services	Optional system integrity services can be requested by the customer as part of the startup and installation.

SERVICE PERFORMED

Fire Suppression Start-up:

1. Verify that 120V AC circuit has been ran to the fire suppression panel.
2. Verify all the items on the Fire Suppression readiness punch list have been completed and acknowledged.
3. Functionality test all input and output circuits for proper operation.
4. Complete the warranty inspection of the system.
5. Provide training to the customer on the operation of the Fire Suppression system.

Door Fan Test (if applicable):

1. Conduct a door fan test with the standardized Fan test system.
2. Measure the pressure retention rate and calculate the amount of air flowing through the Door fan.
3. Determine the total size of the air leaks (if any).
4. Provide the customer with the pressure test report.

Discharge Test (if applicable):

1. Replace the system cylinder with the Proinert test cylinder provided by the manufacturer.
2. Conduct a discharge test on the system.
3. Ensure that the oxygen level falls below 15% and maintains that level for a minimum of 10 minutes.
4. Place the system cylinder back into place and arm the system.
5. Provide the customer with a discharge test report.

CUSTOMER RESPONSIBILITIES

In order to provide timely, accurate and thorough execution of the services described herein, Vertiv requests the following:

- Point of Contact: Provide an authorized point of contact(s), specific for the scope of work, for scheduling and coordination purposes.
- Scheduling: Make dates available for scheduling service. All visits must be requested 10 business days in advance of need by contacting the Vertiv Customer Resolution Center at 1-800-543-2378.
- Site Access: Prior to time of scheduled work, provide site access including any customer required escort, security clearance, safety training and badging for Vertiv service personnel.
- Equipment Access: Convenient access to the equipment covered by the Scope of Work. Prior to scheduled time of work, notify Vertiv service personnel of any special requirements for equipment access including lifts, ladders, etc.
- Shutdown: Service may require shutdown of load to ensure electrical connection integrity.
- Notification: If for any reason the work cannot be performed during scheduled time, notify Vertiv service personnel 24-hours prior to scheduled event.

ASSUMPTIONS AND CLARIFICATIONS

- Assembly: The assembly of the Fire Suppression cabinet is included in the SmartRow2.
- Punch list: This document confirms system readiness and must be completed before startup. It is included in the submittal package.
- Permitting: The customer is responsible for any permits (if required), as it falls outside the original scope. While the process can be facilitated, the customer will be responsible for all permitting costs, including any optional services listed above.
- Maintenance: Per NFPA 2001, the FIKE Proinert IG-55 SHP Pro suppression system protecting the SmartRow2 shall be inspected on a semi-annual basis. These inspections are not only important in ensuring the included clean agent system is functionally operational but are necessary to qualify for any manufacturer warranties. Per the manufacturer's warranty guidelines, the equipment must be maintained on a semi-annual frequency by an authorized FIKE distributor commencing with the date of Startup.
- Optional Integrity testing: Manufacturer intends to provide both the integrity test services (Door fan test and Discharge test) at the customer's facility either directly or through a local Fike distributor. This pricing includes the necessary labor, equipment, and materials to complete this testing.
- Manufacturer does not guarantee a passing test after the system has been handed over to the customer and is not responsible for the patching and sealing of the enclosure if the cable and CRV penetrations have not been sealed.

TERMS AND CONDITIONS

Subject to all Terms & Conditions as noted in the Vertiv Terms & Conditions or the terms of a Master Agreement between the parties, if any, shall apply.

SmartRow 2
Scope of Work Checklist

Customer Name: _____

Project Name: _____

Project Number: _____

This document is to serve as a checklist to help identify and budget the various work activities involved with assembling and installing a SmartRow 2. It is the customers responsibility to ensure all tasks are assigned to partners which will result in a successful SmartRow 2 project.

Contact Vertiv for available local support resources to provide technical guidance as needed. Call 800 543-2378

The **X** indicates the responsible party for that task. Multiple **X**'s indicate shared responsibility.

This document is provided as a reference document and does not replace any product manuals or supporting documentation. Always read all product documentation before performing any work.

Customer (Name) *includes responsibility for Mechanical, Electrical, and/or General Contractors as needed* : _____

Project Management: _____

Assembly Team Lead: _____

Consolidator: _____

Vertiv Warranty Inspection Tech: _____

Vertiv Sales Rep (LVO): _____

	Customer	Local Vertiv Sales Rep	Project Management	Assembly Team	Consolidator / Inside Delivery	Flagship/FIKE Rep	Vertiv Warranty Inspection Tech	Tasks
1								Pre-Sale Activities
1,01	X	X						Perform / arrange Site Visit to qualify deployment. Add any incremental site-specific Tasks in Section 6 of this checklist.
1,02	X	X						Assess whether the building has enough power available to support the SmartRow 2 and heat rejection.
1,03	X	X						Advise if a floor loading analysis should be conducted.
1,04		X						Ensure the customer understands and adheres to the minimum and maximum SmartRow 2 heat load and rack density limits.
1,05	X	X						Assess if a crane will be required to locate the heat rejection on a roof and plan accordingly.
1,06	X	X						If a freight elevator will be used, confirm adequate lifting capacity and dimensional clearances (PMC cabinet is typically the heaviest piece of equipment at 1998mm height, 1400mm depth, 600mm width and up to 1,600 lb weight.)
2								Post Sale, Equipment Pre-Delivery Activities
2,01		X						Ensure every task in this Trade SOW Guide is assigned to at least one responsible party (Marked by X). This guide is specific to the SmartRow 2.
2,02		X						Send a completed copy of this document to all involved parties.
2,03		X	X					Ensure all trades receive a current and accurate manual and set of submittals.
2,04		X						Acknowledge all tasks listed in the Trade SOW Checklist are completed by all the resposibile parties.
2,05	X	X						Verify whether permits are necessary for the installation of the Fire Suppression System.
2,06	X	X	X					Asses whether the customer requires any onsite system integrity tests as part of the Fire suppression System Startup activity.
2,07	X	X						Complete SmartRow 2 Delivery Service (Inside Delivery) checklist and return to factory within 10 days of PO receipt (Document MBFM 7160-10 in submittal packet).
2,08	X	X						Ensure indoor space meets all SmartRow 2 requirements (see SmartRow 2 manual); identify any issues and resolve: (1) Floor surface must be level and continuous (expansion joints sealed, raised floor tile gaps sealed, no floor drains, etc). (2) Mezzanine/roof can support outdoor heat rejection (if applicable) (3) Adequate service, egress and electrical clearances (see submittal packet) (4) Room containing SmartRow 2 maintained year-round within 0°C – 40°C. (5) The room and floor must be clean and free of debris. (6) Ensure there is at least 24 inches clearance above the rack top plates (7) Ensure no part of the SmartRow 2 will be closer than 18 inches to a sprinkler head (per NFPA 13)
2,09	X	X						Make sure condenser is within 300 equivalent feet (see cooling equipment manuals for calculation guidance).Outdoor Condenser Installation. Follow Installer/User Guide. (1) Condenser is bolted, mounted and leveled (2) Provide and install (2) low voltage twisted pair wires between each indoor cooling unit and outdoor heat rejection (condenser / drycooler) for CANbus communication and dry contact closure. (3) This includes qty (3) vacuum pulls of the refrigerant lines (oil must be changed in the vacuum pump between each pull, and readings should be 250 microns or less. Provide picture with date/time to confirm) (4) Refrigerant lines charged with freon (5) The outdoor piping are wrapped in aluminum and braced
2,10	X	X				X	X	Confirm that the nearest drain for condensate is within the cooling unit's pump head limitations (see cooling equipment manuals).
2,11	X	X						Provide and install utility over-current protection and circuit for each outdoor condenser/drycooler when applicable.
2,12	X	X						Provide and install utility over-current protection and circuit for main input row connection in PMC.
2,13	X	X	X					Schedule delivery. If new construction, installation is recommended before office furniture is installed but after building construction is completed. Permanent, continuous power must be available.
2,14		X	X					Schedule Vertiv Cooling System Warranty Inspection.
2,15		X	X					Schedule Vertiv UPS System Warranty Inspection.

3	SmartRow 2 Assembly							
3,01					X			Receive shipment(s).
3,02					X			Bring equipment from truck into room, unpackage and remove debris (included with SmartRow 2 Delivery Service).
3,03					X			Review equipment for shipping damage (recommended the same party who receives the equipment).
3,04				X				Assemble, gasket and level PMC unit per submittal package.
3,05				X				Assemble, gasket and level indoor cooling unit(s) per submittal package.
3,06				X				Assemble, gasket and level racks per submittal package.
3,07				X				Assemble and attach rubber cable grommets.
3,08				X				Connect door switch wire and rack lighting wire harnesses.
3,09				X				Install cable troughs on top of equipment.
3,10				X				Neatly connect and route CANbus communication cables and address rack temperature 2T-sensors (set dip switches).
3,11				X				Neatly route the rack temperature 2T temperature probes into position in front of EIA rails.
3,12				X				Neatly route and connect all Ethernet cables between SmartRow 2 Network vNSA switch, and all UPS and cooling unit Unity monitoring cards, primary rack-PDU RPC2 monitoring cards, and cooling unit teamwork connections.
3,13				X				Neatly route and connect all rack-PDU array Ethernet cables.
4	SmartRow 2 Installation including the Fire Suppression System							
4,01				X				Install PMC to MBC (20KVA) or PMC to UPS (10KVA) interconnect cabling (cables provided with SmartRow 2)
4,02				X				Install UPS to MBC (20KVA) interconnect cabling (cables provided with SmartRow 2) or Mount POD (Included in SmartRow 2) on UPS (10KVA).
4,03							X	Connect low voltage wires to indoor cooling unit and outdoor heat rejection.
4,04	X							Provide and connect condensate drain line to each indoor cooling unit.
4,05	X							Connect utility high voltage building feed to main input in PMC.
4,06	X		X					Ensure the handover document is completed and acknowledged by all responsible parties if startup activities are scheduled at different times.
5	SmartRow 2 Startup							
5,01				X				Ensure all rubber cable grommets are installed
5,02							X	Cooling system Warranty Inspection.
5,03							X	UPS system Warranty Inspection.
5,04							X	Configure RDU501 Controller
5,05				X				Close breakers on rack-PDUs.
5,06				X				Perform final SmartRow 2 functional test (Door switches, backup fans, HMI).
5,07				X				Clean entire SmartRow 2, inside and outside. When cleaning see-through Plexiglas doors follow instructions in manual to avoid scratching.
5,08				X				Ensure the SmartRow 2 Startup Form has been completed.
6	Fire Suppression System Start up							
6,01	X	X		X		X		Ensure all the required parties are present on site for the installation of the Fire Suppression System.
6,02				X				Position, level and bolt together the Fire suppression cabinet to the rest of the row.
6,03				X				Ensure all the wiring is connected, according to the information available in the submittals.
6,04				X				Install the piping in all the other cabinets.
6,05	X	X				X		Ensure the Punch list items are completed and signed by the responsible parties.
6,06	X	X				X		Review the closeout document with the information about the pre-test conducted at Flagship.
6,07						X		Validate the warranty of the Fire supression system.
6,08						X		Verify that all components are functioning as intended.
6,09	X					X		Provide training to the customer on the system.
7	Optional - Fire Suppression System Integrity Test (upon customer request)							
7,01						X		Conduct a door fan test with the standardized Fan test system.
7,02						X		Measure the pressure retention rate and calculate the amount of air flowing through the Door fan.
7,03						X		Determine the total size of the air leaks.
7,04						X		Provide the customer with the pressure test report.
7,05						X		Replace the system cylinder with the Proinert test cylinder provided by the manufacturer.
7,06						X		Conduct a discharge test on the system.
7,07						X		Ensure that the oxygen level falls below 15% and maintains that level for a minimum of 10 minutes.
7,08						X		Place the system cylinder back into place and arm the system.
7,09						X		Provide the customer with a discharge test report.