# NetSure™ 710NPBA
# +24 VDC Power System

## User Manual

Specification Number: 581127000
Model Number: 710NPBA

The information contained in this document is subject to change without notice and may not be suitable for all applications. While every precaution has been taken to ensure the accuracy and completeness of this document, Vertiv assumes no responsibility and disclaims all liability for damages resulting from use of this information or for any errors or omissions. Refer to other local practices or building codes as applicable for the correct methods, tools, and materials to be used in performing procedures not specifically described in this document.

The products covered by this instruction manual are manufactured and/or sold by Vertiv. This document is the property of Vertiv and contains confidential and proprietary information owned by Vertiv. Any copying, use or disclosure of it without the written permission of Vertiv is strictly prohibited.

Names of companies and products are trademarks or registered trademarks of the respective companies. Any questions regarding usage of trademark names should be directed to the original manufacturer.

## Technical Support Site

If you encounter any installation or operational issues with your product, check the pertinent section of this manual to see if the issue can be resolved by following outlined procedures.

Visit https://www.vertiv.com/en-us/support/ for additional assistance.

# TABLE OF CONTENTS

**Admonishments Used in this Document** ..... **iv**
**Important Safety Instructions** ..... **v**
**1 Customer Documentation Package** ..... **1**
**2 System Description** ..... **1**
**3 Physical Security** ..... **3**
**4 Operating Procedures** ..... **3**
4.1 Controller, Rectifiers, and Optional Converters ..... 3
4.2 ESTOP Function ..... 3
4.3 Controller Battery Charge Current Limit Feature ..... 5
4.4 Local Controls and Indicators ..... 5
**5 Maintenance** ..... **11**
5.1 System Maintenance Procedures ..... 11
5.2 Adding a Rectifier or DC-DC Converter Module to an Existing Module Mounting Assembly ..... 11
5.3 Installing a Field Expansion Module Mounting Assembly ..... 13
5.4 Reconfiguring a Dual Voltage Distribution Panel (List DA, DB, DC, DD) ..... 16
5.5 Reconfiguring a Dual Voltage Distribution Panel (List DE, DF, DG, DH, DJ, DK) ..... 25
5.6 Changing the Controller's LVD Control Level for a Contactor ..... 34
5.7 Installing Optional Second IB2 (Controller Interface Board) or Optional Second EIB (Controller Extended Interface Board) ..... 34
**6 Troubleshooting and Repair** ..... **34**
6.1 Contact Information ..... 34
6.2 Controller, Rectifiers, and Optional Converters ..... 34
6.3 Controller Configuration ..... 34
6.4 System Troubleshooting Information ..... 34
6.5 Replacement Information ..... 36
6.6 Replacement Procedures ..... 36
6.6.1 Replacing a Rectifier or Converter Module ..... 36
6.6.2 Replacing a List A1 or A2 Inverter ..... 36
6.6.3 Inverter Module Replacement ..... 42
6.6.4 Transfer Switch Replacement ..... 43
6.6.5 Replacing a List D2 or D3 DC-DC Converter ..... 43
6.6.6 Replacing the Controller ..... 45
6.6.7 Replacing a Distribution Device ..... 45
6.6.8 Replacing a Distribution Panel (List AA, AB, AC, AD, AE, AF, AG, AH, AJ, AK, DA, DB, DC, DD, BA, BB, BC, BD, BE, BF, BG, BH, AM, and AP) ..... 55
6.6.9 Replacing a Distribution Panel (List AL, AN, DE, DF, DG, DH, DJ, and DK) ..... 58
6.6.10 Replacing a Distribution Panel List AA, AB, AC, AD, AE, AF, AG, AH, AJ, AK, DA, DB, DC, DD, BA, BB, BC, BD, BE, BF, BG, or BH with a List AL, AN, DE, DF, DG, DH, DJ, or DK ..... 61
6.6.11 Circuit Card Replacement Procedures ..... 66
6.6.12 Replacing a Battery or Load Disconnect Contactor ..... 81

# Admonishments Used in this Document

**DANGER!** Warns of a hazard the reader ***will*** be exposed to that will ***likely*** result in death or serious injury if not avoided. (ANSI, OSHA)

**WARNING!** Warns of a potential hazard the reader ***may*** be exposed to that ***could*** result in death or serious injury if not avoided. This admonition is not used for situations that pose a risk only to equipment, software, data, or service. (ANSI)

**CAUTION!** Warns of a potential hazard the reader ***may*** be exposed to that ***could*** result in minor or moderate injury if not avoided. (ANSI, OSHA) This admonition is not used for situations that pose a risk only to equipment, data, or service, even if such use appears to be permitted in some of the applicable standards. (OSHA)

**ALERT!** Alerts the reader to an action that ***must be avoided*** in order to protect equipment, software, data, or service. (ISO)

**ALERT!** Alerts the reader to an action that ***must be performed*** in order to prevent equipment damage, software corruption, data loss, or service interruption. (ISO)

**FIRE SAFETY!** Informs the reader of fire safety information, reminders, precautions, or policies, or of the locations of fire-fighting and fire-safety equipment. (ISO)

**SAFETY!** Informs the reader of general safety information, reminders, precautions, or policies not related to a particular source of hazard or to fire safety. (ISO, ANSI, OSHA)


Proprietary and Confidential © 2026 Vertiv Group Corp.

# Important Safety Instructions

## Safety Admonishments Definitions

Definitions of the safety admonishments used in this document are listed under “Admonishments Used in this Document” on page iv.

## Safety and Regulatory Statements

Refer to Section 4154 (provided with your customer documentation) for Safety and Regulatory Statements.

## Déclarations de Sécurité et de Réglementation

Reportez-vous à la Section 4154 (fourni avec les documents de votre client) pour les déclarations de sécurité et de réglementation.

Proprietary and Confidential © 2026 Vertiv Group Corp.

This page intentionally left blank.


Proprietary and Confidential © 2026 Vertiv Group Corp.

# 1 Customer Documentation Package

This document (UM581127000) provides *User Instructions* for Vertiv™ NetSure™ +24 VDC Power System Model 710NPBA, Spec. No. 581127000.

The complete Customer Documentation Package consists of…

**Power System Installation Manual**

- Power System Installation Instructions: IM581127000

**ACU+ Controller User Manual**

- ACU+ Controller User Instructions: UM1M820BNA

**NCU Controller User Manual**

- NCU Controller User Instructions: UM1M830BNA

**USB Drive with All Customer Documentation**

- Power System Quick Start Guide: QS581127000
- Power System Installation Instructions: IM581127000
- Power System User Instructions: UM581127000
- ACU+ Controller User Instructions: UM1M820BNA
- NCU Controller User Instructions: UM1M830BNA
- Power System "System Application Guide": SAG581127000
- Module Mounting Shelf Power Data Sheet: PD588705200 (PD588705201, PD588705202, PD588705203, PD588705204)
- Rectifier Instructions: UM1R243000
- Converter Instructions: UM1C24481500
- NCU Controller 2nd Ethernet Port Add-On Kit Instructions: IM559252
- NCU Controller 2nd Ethernet Port Retrofit Kit Instructions: IM559251
- Engineering Drawings
- Also provided on the USB drive is a controller configuration drawing and the controller configuration files loaded into the controller as shipped.

# 2 System Description

+24 VDC @ up to 2000 Amperes Power System

The Vertiv™ NetSure™ 710NPBA DC Power System is an integrated power system containing rectifiers, optional converters, intelligent control, metering, monitoring, and distribution.

This power system is designed to power a load while charging a negative grounded battery. This power system is capable of operating in a batteryless installation or off battery for maintenance purposes. The power system is designed for operation with the negative output grounded.

Proprietary and Confidential © 2026 Vertiv Group Corp.

This system consists of the following components.

## Distribution Cabinet

The system always includes a minimum of one distribution cabinet, which provides DC distribution through fuses and/or circuit breakers. The distribution cabinet is factory mounted in the relay rack or shipping brackets specified when ordered.

Four different sizes of distribution cabinets are available to accept from one (1) to four (4) distribution panels. A variety of distribution panels are available that provide load distribution, battery distribution, and dual voltage load distribution for use with -48V converters. These distribution panels are configured to accept either bullet nose type circuit breakers and TPS/TLS fuseholders, TPH fuses, TPL-B fuses, or GJ/218 circuit breakers. A bulk output panel is also available.

The distribution cabinet may be equipped with low voltage load disconnect (LVLD), low voltage battery disconnect (LVBD), and manual battery disconnect.

## Controller

The controller controls the operation of the rectifier and converter modules. The controller also provides power system control, metering, monitoring, and alarm functions.

NCU (NetSure Control Unit): The controller provides power system control (including optional low voltage battery disconnect (LVBD) and low voltage load disconnect (LVLD) control), rectifier control (including a charge control function), converter control, metering functions, monitoring functions, and local/remote alarm functions. The controller also supports rectifier temperature compensation if the system is equipped with a temperature probe(s). Temperature probe(s) may also be designated to monitor ambient temperature and/or battery temperature. The controller also provides data acquisition, system alarm management, and advanced battery and energy management. The controller contains a color LCD display and keypad for local access. The controller provides an Ethernet port and comes with comprehensive webpages for remote access. The controller has SNMP v3 capability for remote system management. The controller supports software upgrade via its USB port. Refer to the NCU Controller Instructions (UM1M830BNA) for more information.

ACU+ (Advanced Control Unit Plus): The controller provides power system control (including optional low voltage battery disconnect (LVBD) and low voltage load disconnect (LVLD) control), rectifier control (including a charge control function), converter control, metering functions, monitoring functions, and local/remote alarm functions. The controller also supports rectifier temperature compensation if the system is equipped with a temperature probe(s). Temperature probe(s) may also be designated to monitor ambient temperature and/or battery temperature. The controller also provides data acquisition, system alarm management, and advanced battery and energy management. The controller contains an LCD display and keypad for local access. The controller provides an Ethernet port and comes with comprehensive webpages for remote access. The controller has SNMP capability for remote system management. The controller supports software upgrade via its USB port. Refer to the ACU+ Controller Instructions (UM1M820BNA) for more information.

## Module Mounting Assembly

The system contains one module mounting assembly which houses rectifier modules and optional DC-DC converter modules. A module mounting assembly consists of one (1) to four (4) 8-position module mounting shelves. Refer to Power Data Sheet PD588705200 (PD588705201, PD588705202, PD588705203, PD588705204) for more information.

## Rectifier Modules

The system contains rectifier modules, which provide load power, battery float current, and battery recharge current during normal operating conditions. Refer to the Rectifier User Instructions (UM1R243000) for more information.

## Converter Modules

Where –48VDC load power is also required, DC-DC converter modules are available. Refer to the Converter User Instructions (UM1C24481500) for more information.


Proprietary and Confidential © 2026 Vertiv Group Corp.

# 3 Physical Security

This product is designed and intended to be deployed and operated in a physically secure and network firewall-protected location. Vertiv recommends a review of the physical security and operating environment of the unit. Since an attacker or disgruntled user can cause serious disruption, below are some recommended best practices that include, but are not limited to:

- Restrict access to areas, racks, and units with encrypted card RFID/badges, unique multi-factor passcode authentication for access, man traps, and biometric scanners for physical access to the equipment.
- Have trusted and background-checked security guards with 24x7x365 physical presence and written logs to help document and note physical access to a data center, building, rack, and so on.
- Restrict physical access to telecommunications equipment and network cabling. Physical access to the telecommunications lines and network cabling should be restricted to protect against attempts to intercept or sabotage communications. Best practices include use of metal conduits for the network cabling running between equipment cabinets.
- All USB, RJ45, and/or any other physical ports should be restricted on the units.
- Do not connect removable media (such as USB devices, SD cards, and so on) for any operation (such as firmware upgrade, configuration change, or boot application change) unless the origin of media is known and trusted. Before connecting any portable device through a USB port or SD card slot, scan the device for malware and viruses.

# 4 Operating Procedures

***NOTE!*** *If List A1 and/or List A2 inverters are provided, refer to the separate inverter instruction manuals furnished with this power system for operating procedures. If List D2 and/or D3 DC-DC Converters are provided, refer to the separate DC-DC Converter instruction manuals furnished with this power system for operating procedures.*

***NOTE!*** *No adjustments are provided on List A1 and List A2 Inverters. No adjustments are provided on List D2 and D3 DC-DC Converters.*

## 4.1 Controller, Rectifiers, and Optional Converters

For operation instructions on these units, refer to the following documents.

- ACU+ Controller Instructions (UM1M820BNA)
- NCU Controller Instructions (UM1M830BNA)
- Rectifier User Instructions (UM1R243000)
- Converter User Instructions (UM1C24481500)

## 4.2 ESTOP Function

If an ESTOP switch is wired to the IB2-1 Controller Interface Board, customer-furnished system ground applied to terminal DI8- activates the ESTOP function. The ESTOP function shuts down and locks out the rectifiers, shuts down and locks out the optional +24 VDC to -48 VDC converters, and opens the optional low voltage disconnect (LVD) contactors (battery and load type). If the system has battery connected and does not contain a battery LVD or the controller power option is set to Battery Pwr (jumper J8 on the system interface board is set to Battery Pwr), the controller will remain operational. If the system does not contain battery or load LVD(s) and has battery connected, the loads will be sustained by the battery voltage.

For Systems NOT Containing a Battery LVD: When the ESTOP signal is removed, LVD contactors (battery and load type) will close after the “LVD Reconnect Delay” has elapsed (customer configurable via the controller) if battery voltage is present on the bus.

Rectifiers and +24 VDC to -48 VDC converters will remain off. The rectifiers will restart when the input power is removed and restored after 30 seconds or more (until the LEDs on the modules extinguish). To restart the +24 VDC to -48 VDC converters: remove the converter, wait 30 seconds or more (until the LEDs on the converter extinguish), then re-insert the converter.

For Systems Containing a Battery LVD: When the ESTOP signal is removed, LVD contactors (battery and load type) will remain open. Rectifiers and +24 VDC to -48 VDC converters will remain off. The rectifiers will restart when the input power is removed and restored after 30 seconds or more (until the LEDs on the modules extinguish). When the rectifiers restart, LVD contactors (battery and load type) will close after the "LVD Reconnect Delay" has elapse (customer configurable via the controller) and the +24 VDC to -48 VDC converters will restart.

***NOTE!*** *If a customer-furnished method to disconnect the input power to the system is not provided, the rectifiers will stay locked OFF until the input power is recycled. If the ESTOP signal is removed without recycling the input power, the rectifiers will remain off and have a local alarm visible on the module. The ESTOP alarm from the controller will extinguish. The controller will not issue an alarm for this condition.*


Proprietary and Confidential © 2026 Vertiv Group Corp.

## 4.3 Controller Battery Charge Current Limit Feature

Functionality: After a commercial AC failure or when some battery cells are permanently damaged, the current to the batteries can be quite extensive. To avoid overheating or further damages to the battery, the controller can be programmed to limit the battery current to a preset level by limiting the charging voltage of the rectifiers. Should the battery current still exceed a higher preset value, an alarm is issued.

The controller limits the current going to the batteries based on the "Battery Current Limit" set point which is a percentage of the battery capacity in C10. For example, 0.1C10 would mean 10% of the battery capacity.

Refer to the ACU+ Instructions (UM1M820BNA) or NCU Instructions (UM1M830BNA) to program this feature. Battery charge current is limited to the value set in the controller, as long as battery voltage is above 23.5 VDC.

## 4.4 Local Controls and Indicators

***NOTE!*** *If List A1 and/or List A2 inverters are provided, refer to the separate inverter instruction manuals furnished with this power system for a description of controls and indicators. If List D2 and/or D3 DC-DC Converters are provided, refer to the separate DC-DC Converter instruction manuals furnished with this power system for a description of controls and indicators.*

Refer to the Controller, Rectifier, and Converter Instructions for descriptions of the local controls and indicators located on these units.

Refer to this section for descriptions of the local controls and indicators located on the circuit cards installed in the distribution cabinet.

### Circuit Card Locations

Refer to Figure 4.1.

**Figure 4.1 Circuit Card Locations**

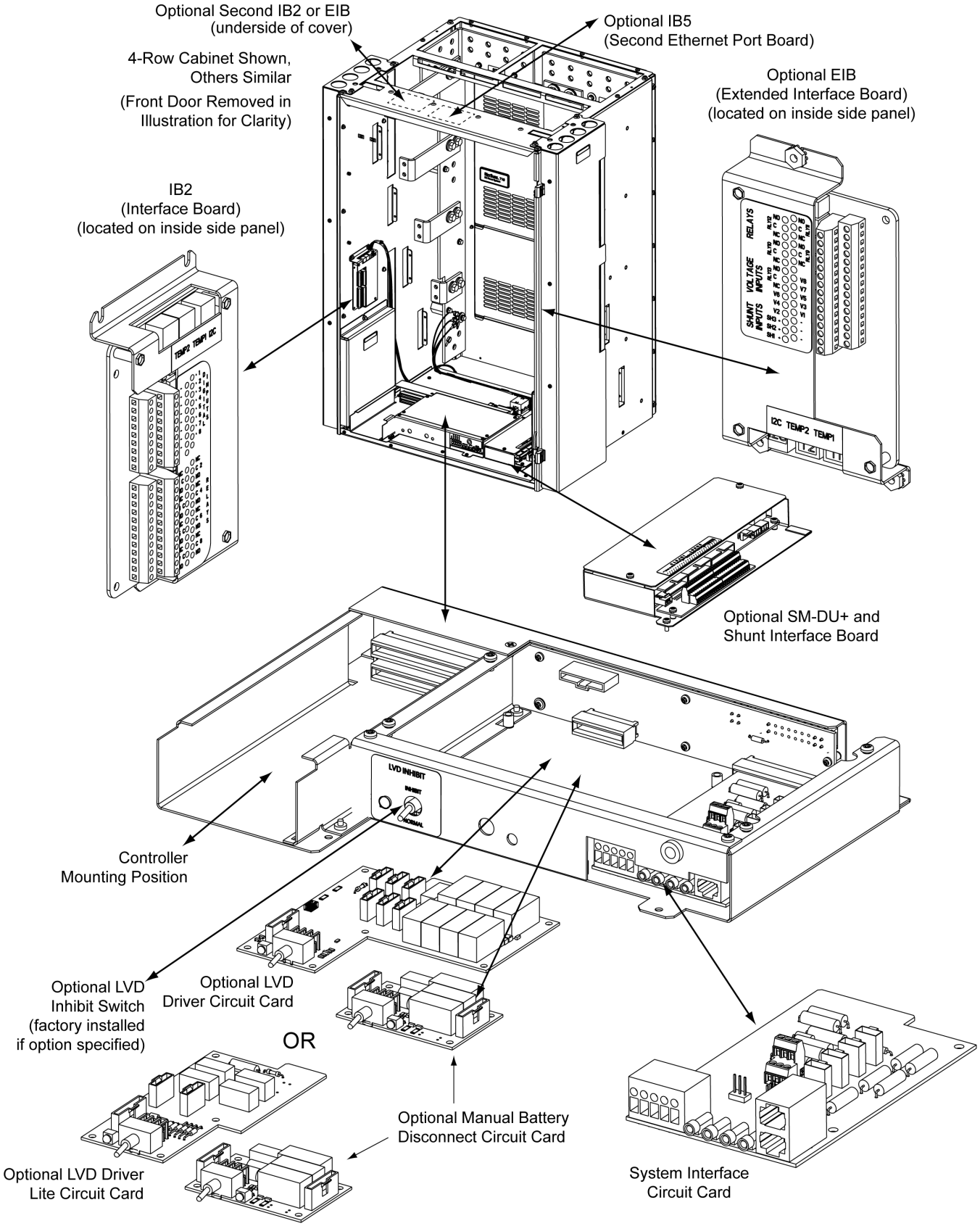



Proprietary and Confidential © 2026 Vertiv Group Corp.

## System Interface Circuit Card

The system interface circuit card contains test points to externally monitor bay voltage and bay load. Refer to Figure 4.2.

**Figure 4.2 System Interface Circuit Card**

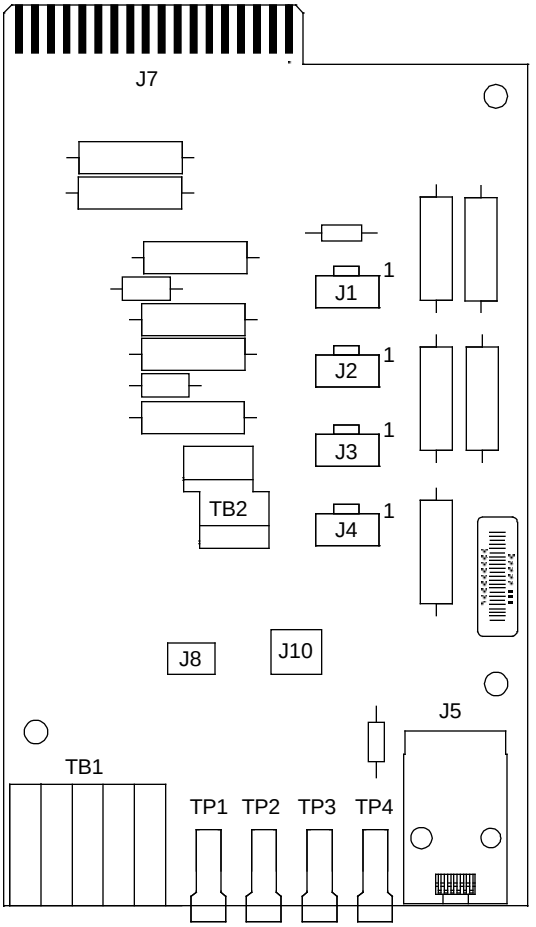


TP1 (+) and TP2 (-) System Voltage Monitoring

TP3 (+) and TP4 (-) System Load Shunt Monitoring

System Load Shunt Scale

List 21, 1-Row Cabinet
800A / 25mV
32A per mV

List 22, 2-Row Cabinet
2000A / 25mV
80A per mV

List 23, 3-Row Cabinet
2500A / 25mV
100A per mV

List 24, 4-Row Cabinet
2500A / 25mV
100A per mV

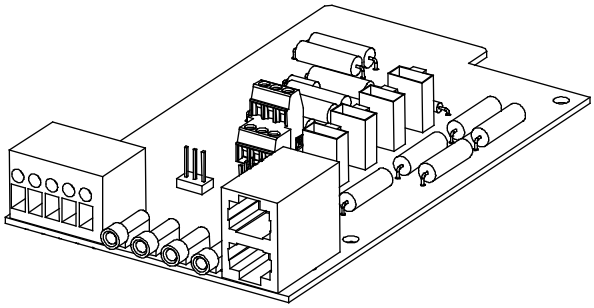

## Optional LVD Driver Circuit Card

The optional LVD driver circuit card contains an LVD inhibit switch and indicator. Refer to Figure 4.3. LVD driver circuit cards are required for 2-, 3-, or 4-row distribution cabinets that contain three or more LVD contactors (LVBD and/or LVLD); or if the distribution cabinet is equipped with an LVBD contactor rated 1200A or higher.

**CAUTION!** If the switch is returned to the ON (normal) position when low voltage disconnect alarms are active, a low voltage disconnection will occur.

**WARNING!** While the LVD inhibit switch is in the OFF (inhibit) position, a low voltage disconnection will not occur if battery or load voltage decreases below the low voltage disconnect setpoint. For maximum battery protection, this switch should NOT be left in the OFF (inhibit) position.

**ALERT!** Do not hold the LVD inhibit switch in the up position for more than 3 seconds to avoid damaging the contactor.

**Figure 4.3 Optional LVD Driver Circuit Card**

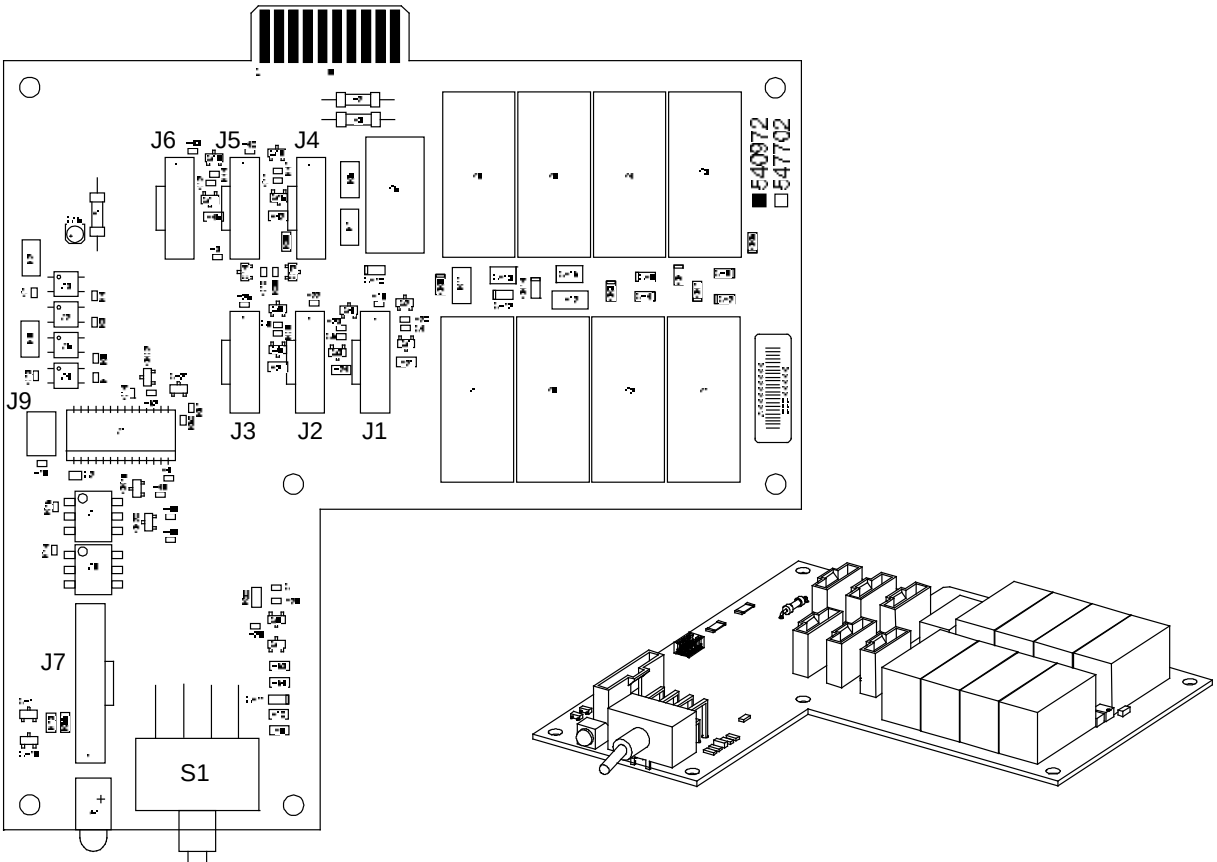


LVD Inhibit Active Indicator

Illuminates when the low voltage disconnect circuit has been disabled through the use of the LVD Inhibit switch.

LVD Inhibit Switch

Momentary UP / Middle / Down
Momentary UP Position: Closes all LVD Contactors (inhibit mode).
Middle Position: OFF (Controller DOES NOT control LVD's) (inhibit mode).
DOWN Position: ON (Controller controls LVD's).

Note: The UP position will not close the LVBD contactor if the battery is manually disconnected using the Manual Battery Disconnect Switch.


Proprietary and Confidential © 2026 Vertiv Group Corp.

## Optional LVD Driver Lite Circuit Card

The optional LVD driver lite circuit card contains an LVD inhibit switch and indicator. Refer to Figure 4.4. LVD driver lite circuit cards are required for distribution cabinets that contain two LVLD contactors or one LVLD contactor and one LVBD contactor. LVBD contactor must be rated at 600A or lower.

**CAUTION!** If the switch is returned to the ON (normal) position when low voltage disconnect alarms are active, a low voltage disconnection will occur.

**WARNING!** While the LVD inhibit switch is in the OFF (inhibit) position, a low voltage disconnection will not occur if battery or load voltage decreases below the low voltage disconnect setpoint. For maximum battery protection, this switch should NOT be left in the OFF (inhibit) position.

**ALERT!** Do not hold the LVD inhibit switch in the up position for more than 3 seconds to avoid damaging the contactor.

**Figure 4.4 Optional LVD Driver Lite Circuit Card**

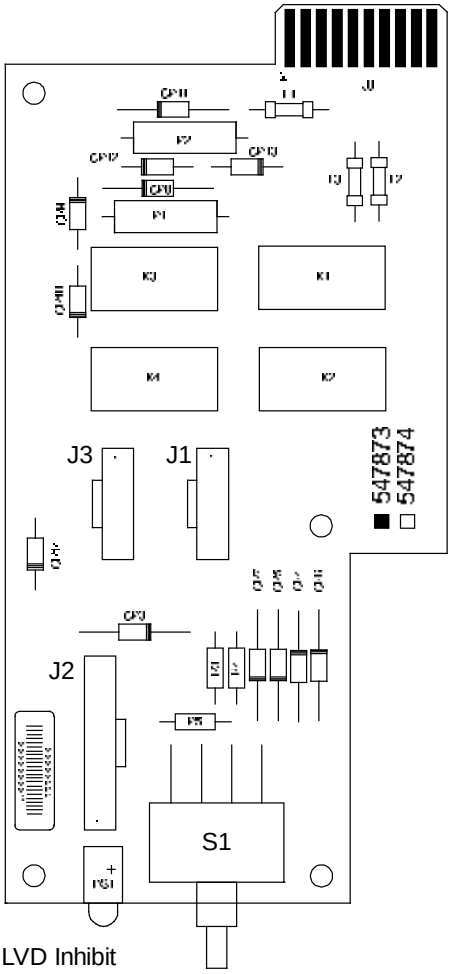


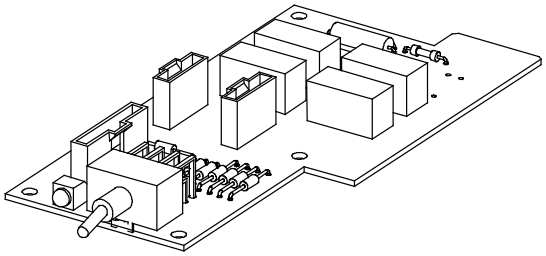

LVD Inhibit Active Indicator

Illuminates when the low voltage disconnect circuit has been disabled through the use of the LVD Inhibit switch.

LVD Inhibit Switch

Momentary UP / Middle / Down
Momentary UP Position: Closes all LVD Contactors (inhibit mode).
Middle Position: OFF (Controller DOES NOT control LVD's) (inhibit mode).
DOWN Position: ON (Controller controls LVD's).

Note: The UP position will not close the LVBD contactor if the battery is manually disconnected using the Manual Battery Disconnect Switch.

## Optional Manual Battery Disconnect Circuit Card

The optional manual battery disconnect circuit card contains a manual battery disconnect switch and indicator. Refer to Figure 4.5.

***NOTE!*** *If this option is to be used as a Maintenance Battery Disconnect only, at least one rectifier requires to be active and providing voltage to the system for proper operation.*

**ALERT!** Do not hold the MBD switch (S1) in the up position for more than 3 seconds to avoid damaging the contactor.

**ALERT!** When using switch, after either pushing up or down let switch return to the center position for 3 seconds before pushing switch in the opposite direction to avoid damaging the contactor.

**Figure 4.5 Optional Manual Battery Disconnect Circuit Card**

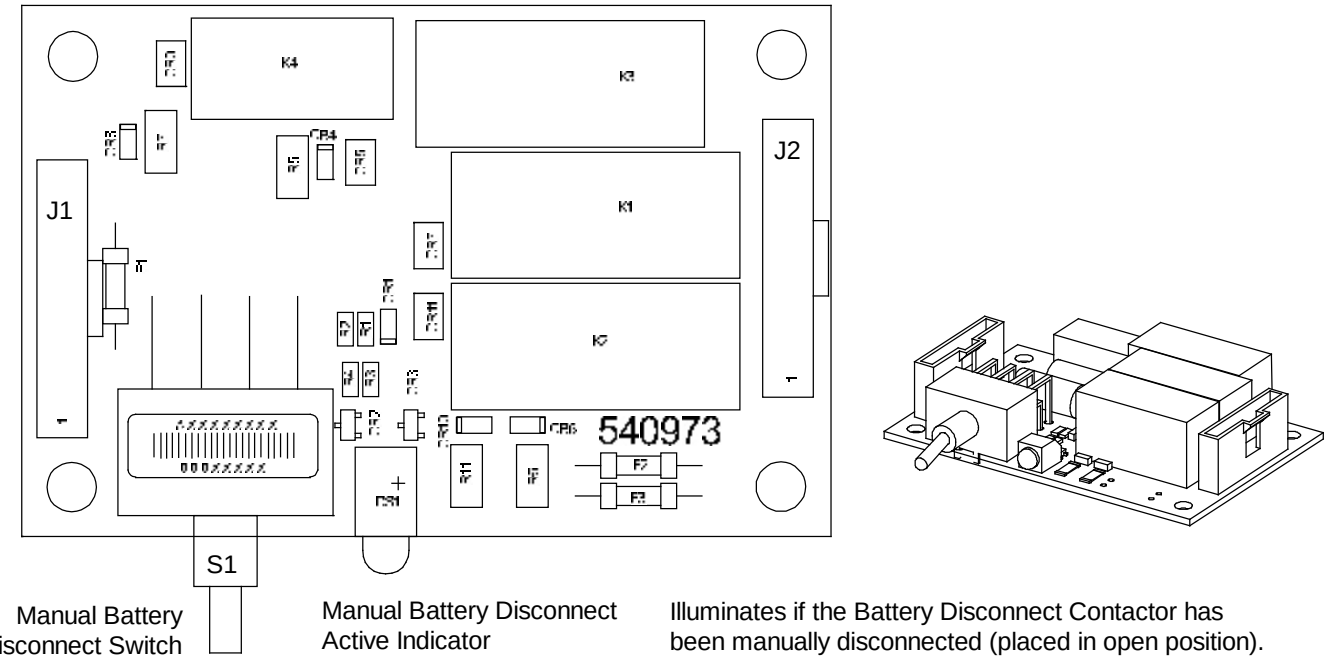


Momentary UP / Middle / Momentary Down

| | |
|---|---|
| Momentary UP Position: | Closes (latches in close position) the Battery Disconnect Contactor. |
| Middle Position: | Normal Operation. |
| Momentary DOWN Position: | Opens (latches in open position) the Battery Disconnect Contactor. Momentarily place switch in the UP position to close the contactor. |


Proprietary and Confidential © 2026 Vertiv Group Corp.

# 5 Maintenance

***NOTE!*** *If List A1 and/or List A2 inverters are provided, refer to the separate inverter instruction manuals furnished with this power system for maintenance procedures. If List D2 and/or D3 DC-DC Converters are provided, refer to the separate DC-DC Converter instruction manuals furnished with this power system for maintenance procedures.*

## 5.1 System Maintenance Procedures

It is recommended to perform the maintenance procedures listed in Table 5.1 every 6-months to ensure continual system operation.

**Table 5.1 Maintenance Procedures to be Performed at 6-Month Intervals**

| PROCEDURE | REFERENCED IN |
|---|---|
| Check ventilation openings for obstructions such as dust, papers, manuals, etc. | -- |
| Inspect and tighten all installer's connections. | IM581127000,<br>“Making Electrical Connections” section. |

## 5.2 Adding a Rectifier or DC-DC Converter Module to an Existing Module Mounting Assembly

To increase system current capacity, a rectifier module can easily be added to an existing module mounting assembly that contains an empty rectifier module mounting position. Likewise, in systems that accept DC-DC converter modules, to increase subsystem capacity a DC-DC converter module can be added to a module mounting assembly that contains an empty converter module mounting position.

The module location diagram on the front of each module mounting assembly shows which type of module can be operated in that shelf. (See Figure 5.1.) Rectifier modules will operate in any mounting position in any shelf. If a shelf accepts DC-DC converter modules, they must be installed in any or all of the four middle mounting positions (B, C, F, G) of each 8-position module mounting shelf.

It is recommended that the current limit point be checked whenever a rectifier or converter is added to or removed from the power system. Refer to “Checking the Controller’s Current Limit Point after Adding or Removing a Rectifier Module” on page 35.

The rectifier or converter module being added is assigned by the controller the lowest available identification number. If desired, you can change the identification number. Refer to the ACU+ Instructions (UM1M820BNA) or NCU Instructions (UM1M830BNA) for a procedure.

**Procedure**

1. Unpack the module.
2. Note the model number located on the handle of the module. Model numbers starting with the letter “R” (R24-2500 or R24-3000) are rectifier modules. Model numbers starting with the letter “C” (C24/48-1500) are DC-DC converter modules.
3. Check the module location diagram on the front of the module mounting assembly to determine which type of module (rectifier or DC-DC converter) can be installed in each mounting position. See Figure 5.1.
4. If present, remove the blank cover panel from the mounting position into which a rectifier or DC-DC converter module is to be installed.
5. Install the rectifier or converter module into the shelf. Refer to the rectifier or converter User Instructions for a procedure.

**Figure 5.1 Module Location Diagrams (located on the front of each module mounting assembly)**

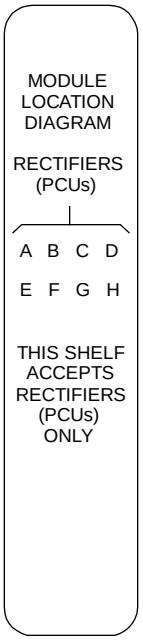


This Shelf Accepts
Rectifier Modules Only

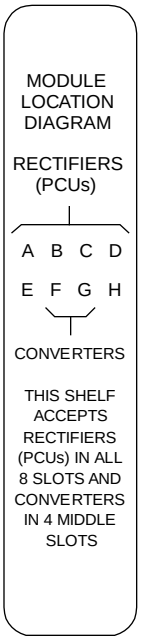


This Shelf Accepts
Rectifier Modules and
DC-DC Converter Modules


Proprietary and Confidential © 2026 Vertiv Group Corp.

## 5.3 Installing a Field Expansion Module Mounting Assembly

A field expansion module mounting assembly can be added to a system that has 24 or fewer module mounting positions.

**Procedure**

**DANGER!** Adhere to the “Important Safety Instructions” presented at the front of this document.

***NOTE!*** *Refer to Figure 5.2 as this procedure is performed.*

1. Slide the expansion module mounting assembly into position directly beneath the bottom-most shelf of the module mounting assembly installed in the system (no space between shelves). Secure the expansion module mounting assembly to the relay rack with the provided 12-24 x 1/2" mounting screws and grounding washers.

***NOTE!*** *Install the ground washers so the teeth make contact with the metal on the mounting angles. Torque all screws to 65 in-lbs.*

2. Remove the rear cover from the bottom-most shelf of the module mounting assembly installed in the system and the expansion module mounting assembly.

***NOTE!*** *Apply electrical anti-oxidizing compound to busbar mating surfaces before performing the next step.*

3. Secure the existing shelf’s busbars to the expansion shelf’s mating busbars with the supplied interconnect busbars and hardware. Hardware build-up is: shelf’s busbar, interconnect busbar, 1/4" hardened flat washer, 1/4" Belleville lock washer, 1/4-20 nut. Install the Belleville lock washer so the concave side is towards the busbar. Torque all connections to 60 in-lbs.
4. Install the supplied side brackets (both sides) to tie the existing shelf to the expansion module mounting assembly.
5. If the Expansion Shelf Accepts DC-DC Converters: Refer to the Power System Installation Instructions (IM581127000) and install the converter output jumpers.
6. Remove the termination cable from the bottom controller bus interconnection connector on the bottom-most existing shelf and plug it into the bottom controller bus interconnection connector on the expansion shelf. See Figure 5.2.
7. Plug the controller bus connector on the cable exiting the top of the expansion shelf into the mating connector exiting the bottom of the shelf above it. See Figure 5.3.
8. Replace the rear covers removed in step 2) above.
9. Refer to the Power System Installation Instructions (IM581127000) and connect AC input power to the expansion shelf.
10. Refer to the rectifier and converter User Instructions and install modules into the expansion shelf as required.

Proprietary and Confidential © 2026 Vertiv Group Corp.

**Figure 5.2 Installing a Field Expansion Module Mounting Assembly**

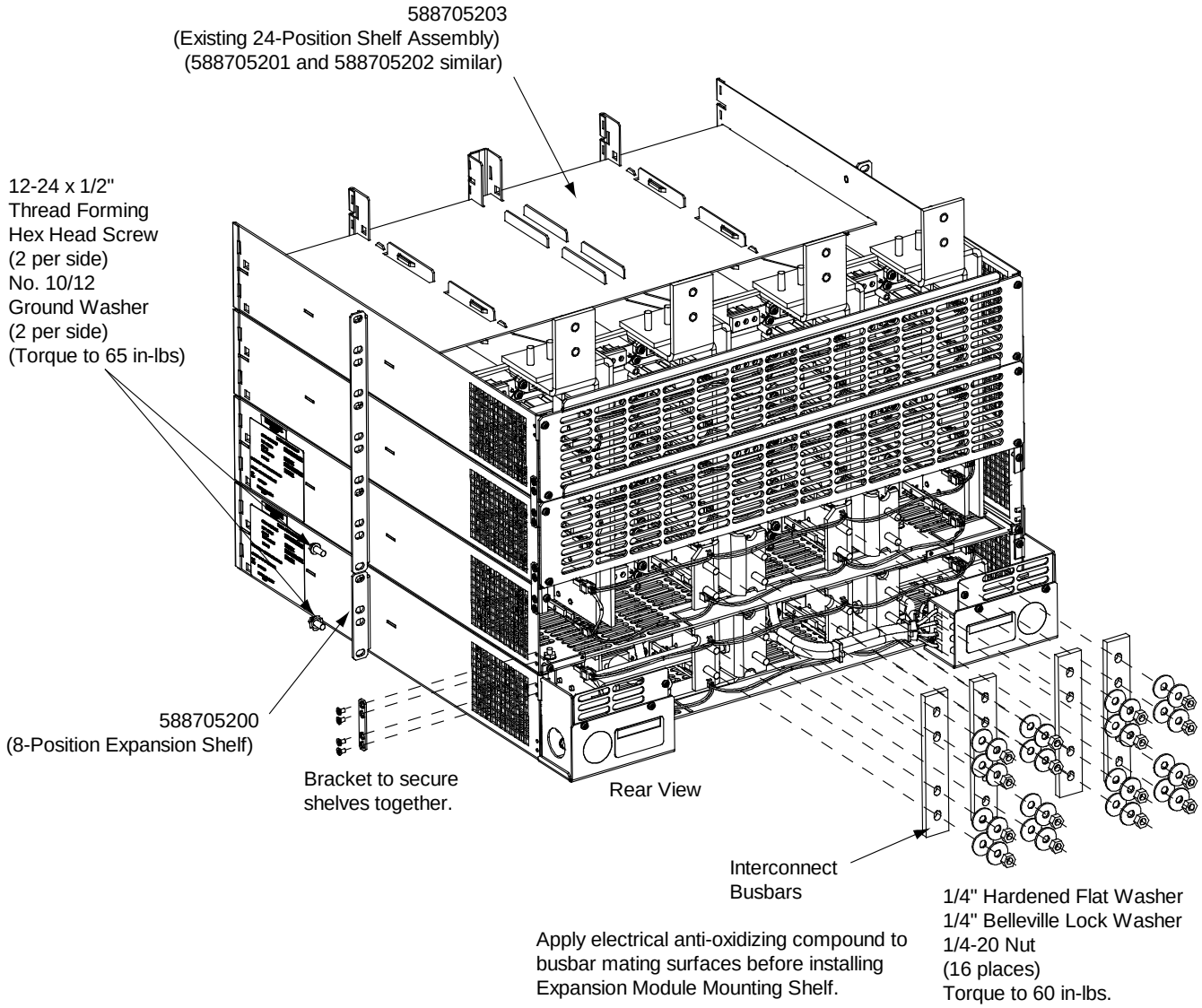


**1. Slide the Expansion Module Mounting Shelf into the relay rack.**

**2. Secure the Expansion Module Mounting Shelf to the relay rack.**

**3. Remove rear cover from existing shelf and the Expansion Module Mounting Shelf.**

**4. Secure the existing shelf's busbars to the expansion shelf's busbars with the supplied interconnect busbars.**

**5. Tie the existing shelf to the Expansion Module Mounting Shelf with the supplied brackets (both sides).**

**5. Remove the connector from the bottom controller communications connector in the existing shelf and plug it into the bottom controller communications connector in the expansion shelf. Plug the loose end of the bottom controller communications connector in the existing shelf into the loose end of the top controller communications connector in the expansion shelf.**

**6. Reinstall rear covers.**


Proprietary and Confidential © 2026 Vertiv Group Corp.

**Figure 5.3 Communications Cables**

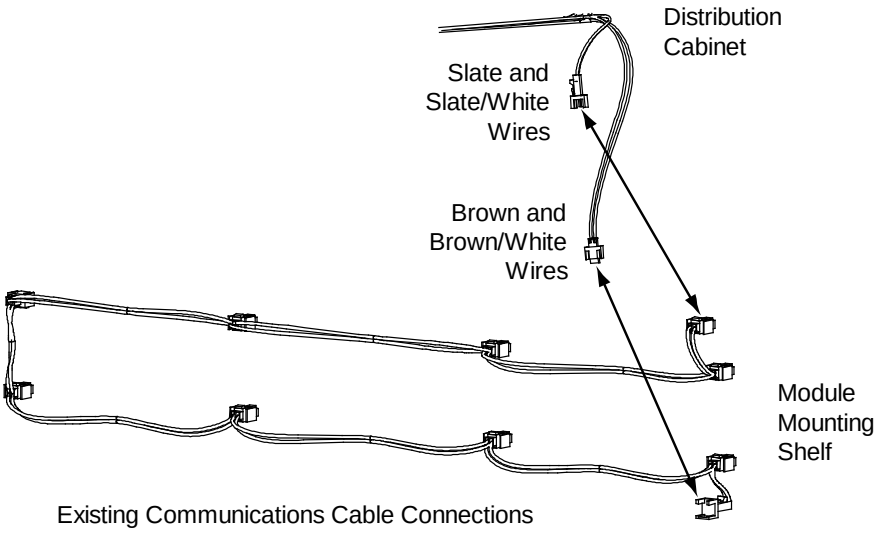


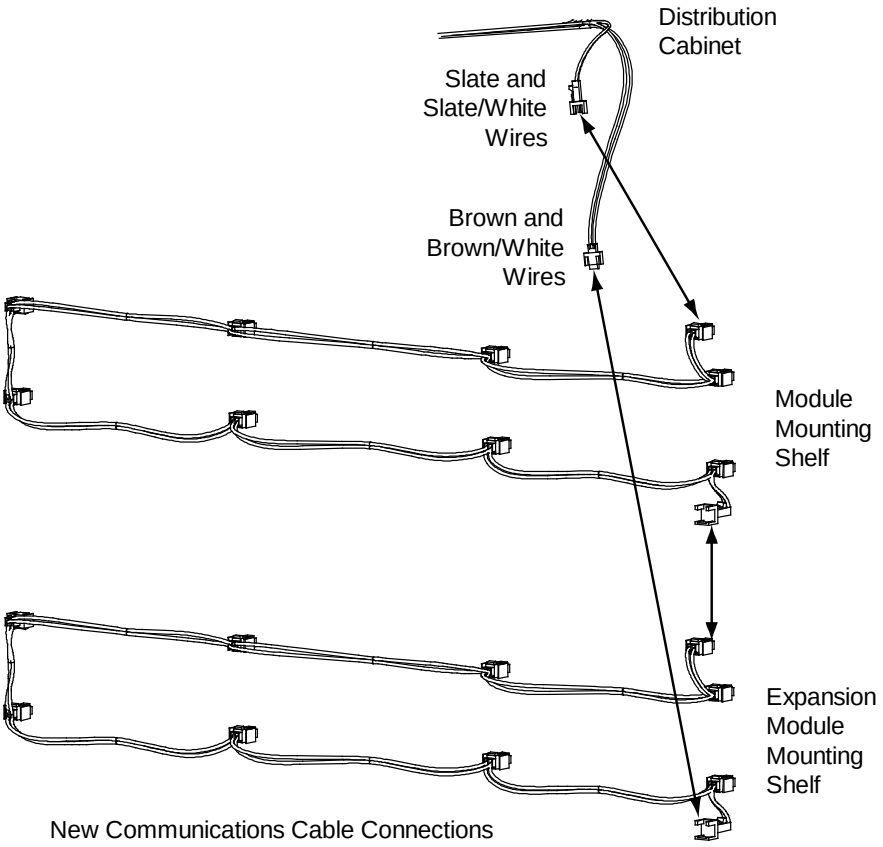

## 5.4 Reconfiguring a Dual Voltage Distribution Panel (List DA, DB, DC, DD)

Perform the following procedure to reconfigure a dual voltage distribution panel (List DA, DB, DC, DD) to move distribution positions from one voltage to the other.

**DANGER!** Performing this procedure exposes service personnel to battery potential. Exercise extreme caution not to inadvertently contact or have any tool inadvertently contact any energized electrical termination.

***NOTE!*** *Save all removed hardware. Hardware will be re-used.*

### Removing the Distribution Panel

**Procedure**

1. Performing this procedure may activate external alarms. Do one of the following. If possible, disable these alarms. If these alarms cannot be easily disabled, notify the appropriate personnel to disregard any future alarms associated with this system while the procedure is being performed.
2. Open the distribution cabinet's front door by turning the latch in the counterclockwise position.
3. Remove the plastic shield covering the circuit breakers and/or fuseholders on the distribution panel to be removed by loosening the screws holding the shield and sliding the shield upwards.
4. Record circuit breaker and/or fuse positions and sizes.
5. Remove circuit breakers and/or fuseholders.
6. Label the load leads.
7. Disconnect all load leads from the circuit breaker and/or fuse positions.
8. Disconnect all load return leads from the ground busbar.
9. Refer to Figure 5.4 and remove the hardware securing the -48V jumper leads. Insulate and tie back these leads.
10. Refer to Figure 5.4 and locate the in-line FA/CBA connector located near the back of the distribution panel. Separate the connector halves.
11. Refer to Figure 5.4 and remove the hardware securing the distribution panel's ground busbar to the distribution cabinet's busbar.
12. Refer to Figure 5.4 and remove the hardware securing the distribution panel's system load distribution busbar to the distribution cabinet's busbar.
13. Refer to Figure 5.4 and remove the hardware securing the distribution panel to the distribution cabinet. Remove the distribution panel from the distribution cabinet.


Proprietary and Confidential © 2026 Vertiv Group Corp.

**Figure 5.4 Removing/Installing the Distribution Panel**

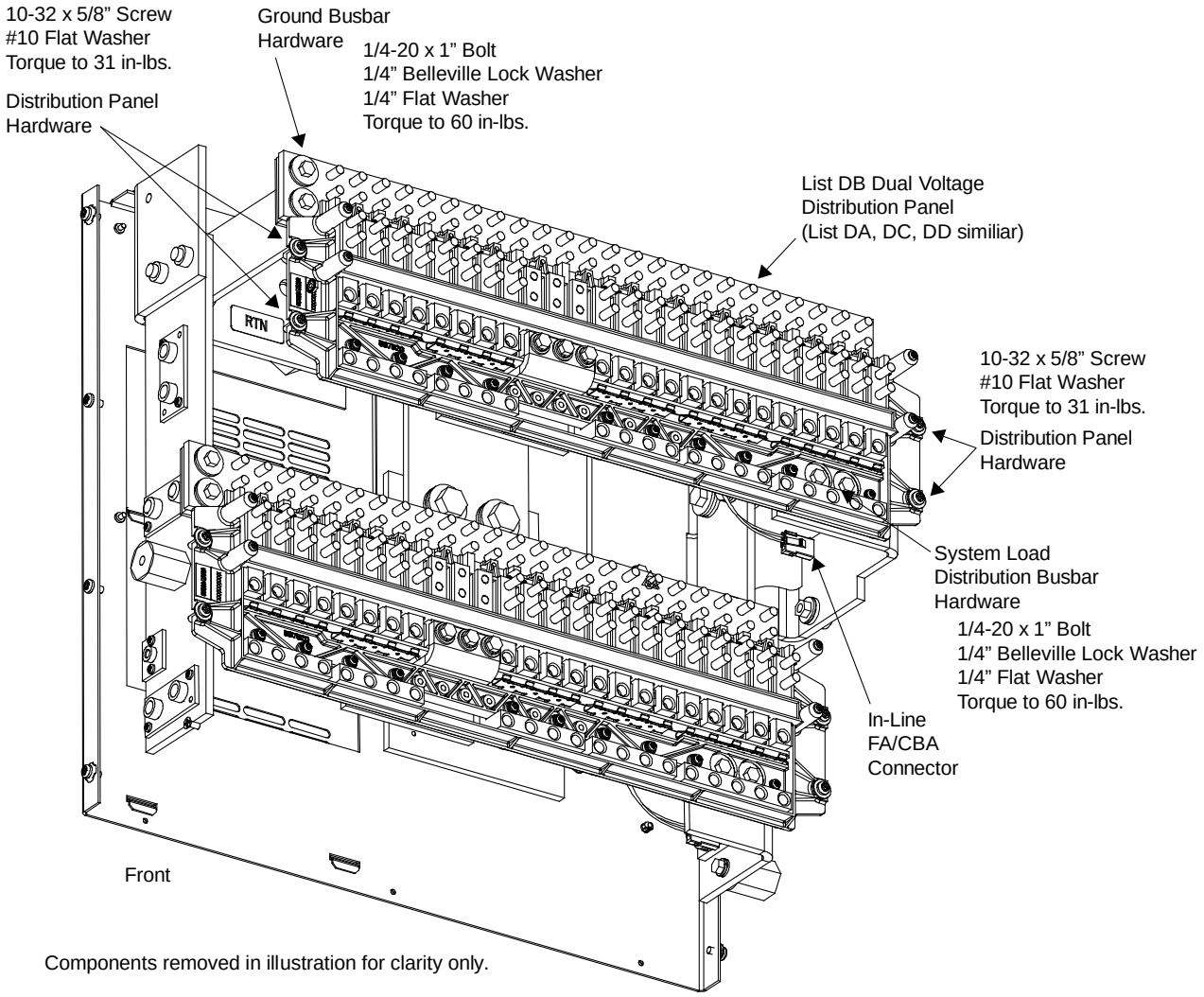


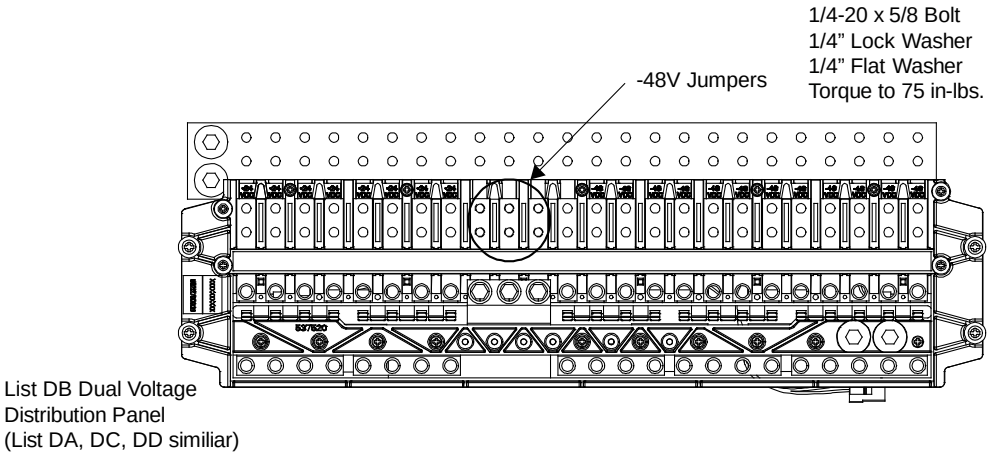

## Reworking the Distribution Panel Introduction

You can reconfigure the distribution panel to swap +24V distribution positions for -48V distribution positions, and vice versa, in groups of four. The resulting assembly can have (5) +24V and (16) -48V, (9) +24V and (12) -48V, (13) +24V and (8) -48V, or (17) +24V and (4) -48V positions.

You do this by removing the subsystem input power busbar and associated input lead busbars, then moving the appropriate distribution device busbar and associated distribution device lead busbars left or right in increments of four (4) positions, then re-installing the subsystem input power busbar and associated input lead busbars. The distribution devices alarm spring most also be appropriately moved. Refer to the following procedures to reconfigure the distribution panel.

**Figure 5.5 Reworking the Distribution Panel Introduction**

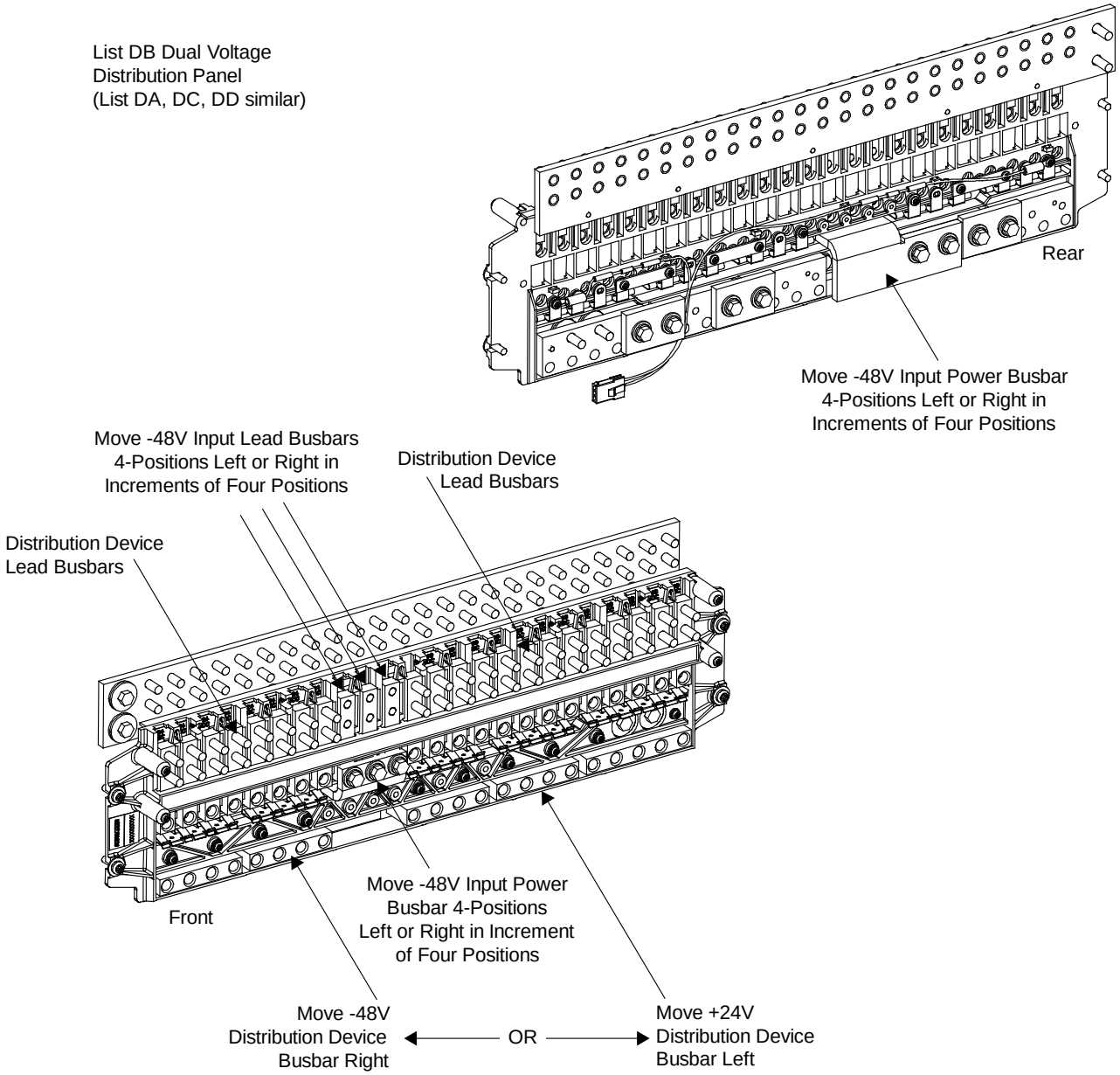



Proprietary and Confidential © 2026 Vertiv Group Corp.

## Removing the -48V Input Power Busbar and Input Lead Busbars

### Procedure

1. From the front of the distribution panel, remove the three bolts and hardware from the -48V input power busbar.
2. From the rear of the distribution panel, remove the two bolts and hardware from the -48V input power busbar.
3. Remove the -48V input power busbar from the distribution panel. Set aside for later re-installation.
4. Remove the three -48V input lead busbars from the distribution panel. Refer to Figure 5.6 and press in the tab to release a -48V input lead busbar. Slide the -48V input lead busbar up and out of the distribution panel. Repeat for all three busbars. Set aside for later re-installation.

**Figure 5.6 Removing the -48V Input Power Busbar and Input Lead Busbars**

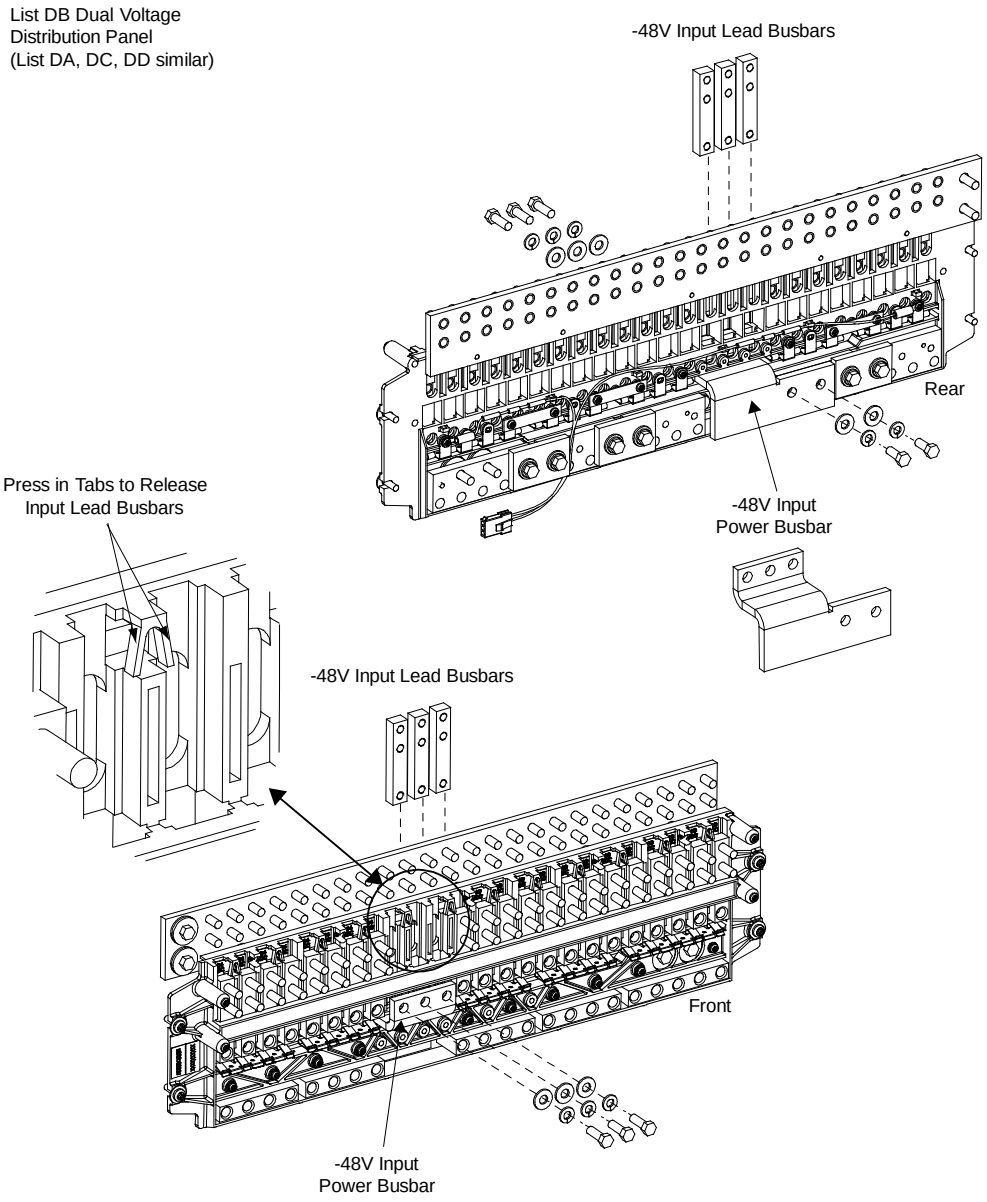

## Moving the Distribution Device Busbar and Distribution Lead Busbars Left or Right

### Procedure

1. Determine how you are reconfiguring the distribution panel (adding -48V or +24V distribution positions). Locate the distribution device busbars and distribution device lead busbars to be moved.
2. From the front of the distribution panel, remove the two screws and hardware securing the appropriate distribution device busbar(s). The busbar(s) are located to the left or to the right of the open space created when the -48V input power busbar was removed in the previous procedure.
3. From the rear of the distribution panel, remove the two bolts and hardware securing the distribution device link busbar(s) between the distribution device busbar(s) to be moved and the one adjacent to it.
4. Slide the distribution device busbar(s) three (3) positions to the left or to the right.
5. From the front of the distribution panel, re-install the two screws and hardware to secure the distribution device busbar(s) just moved. Torque as indicated in Figure 5.7.
6. From the rear of the distribution panel, re-install the distribution device link busbar(s) between the distribution device busbar(s) just moved and the one adjacent to it with the two bolts and hardware previously removed. Apply anti-oxidizing compound to busbar mating surfaces. Torque as indicated in Figure 5.7.
7. Remove the four distribution device lead busbars located above the position(s) of each of the distribution device busbar(s) were moved from. Refer to Figure 5.7 and press in the tab to release a distribution device lead busbar. Slide the distribution device lead busbar up and out of the distribution panel. Repeat for all distribution device lead busbars.
8. Remove the polarity labels from these positions. Turn over the polarity labels so the other polarity shows. Re-install the polarity labels to the left or right of the original position (into the positions the distribution device lead busbars will be moved to in the next step).
9. Re-install the distribution device lead busbars three (3) positions to the left or to the right of the original positions. Slide a distribution device lead busbar down and into the distribution panel. Repeat for all distribution device lead busbars.


Proprietary and Confidential © 2026 Vertiv Group Corp.

**Figure 5.7 Moving the Distribution Device Busbar and Distribution Lead Busbars Left or Right**

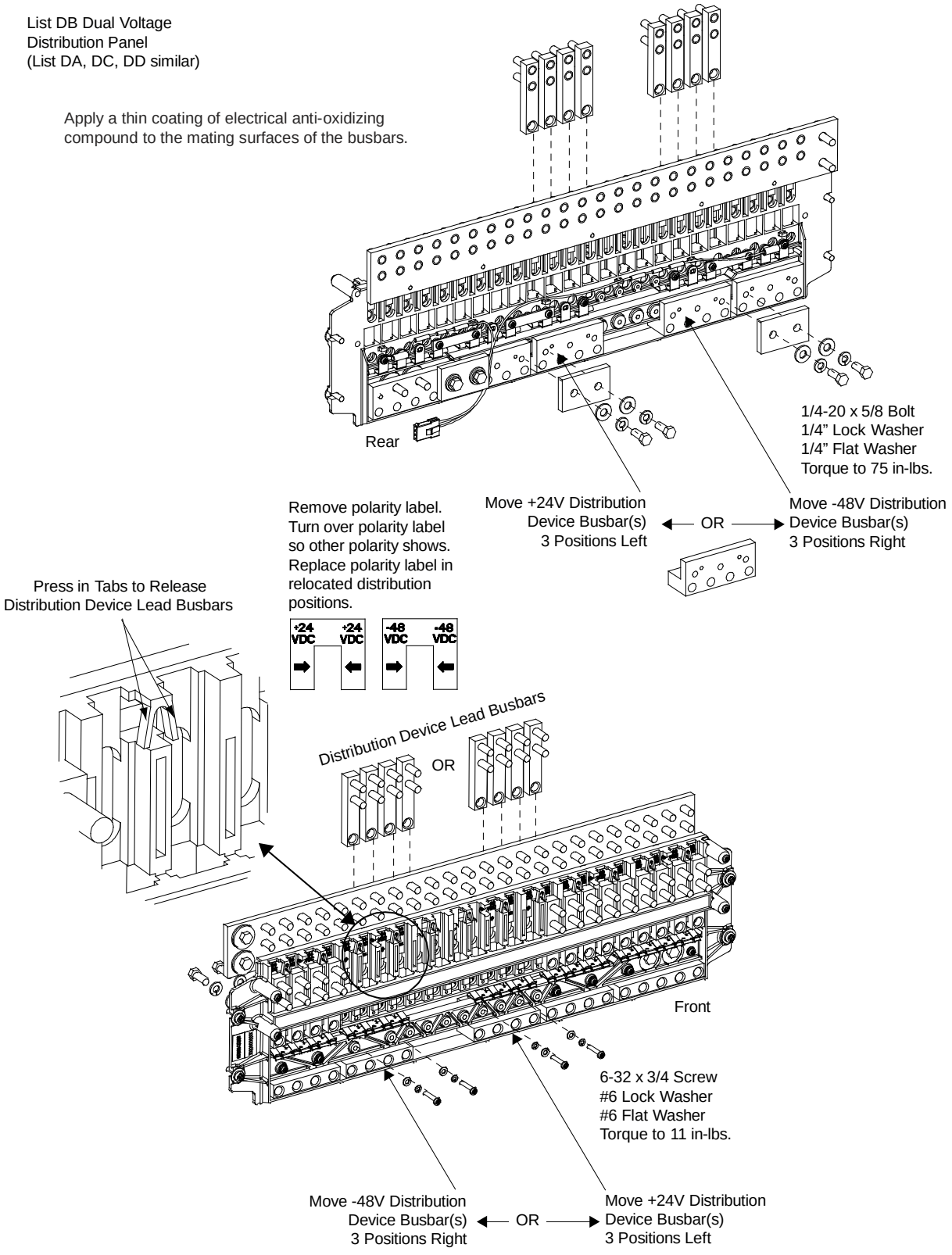

## Moving the Alarm Spring(s) Left or Right

### Procedure

1. Located the alarm spring(s) and alarm spring link(s) to be moved.
2. From the rear of the distribution panel, remove the appropriate alarm spring link(s).
3. From the rear of the distribution panel, remove the screw(s) from the alarm spring(s) to be moved. Slide the alarm spring(s) three (3) positions to the left or to the right. Secure with the screw(s) just removed. Torque as indicated in Figure 5.8.
4. Re-install the alarm spring link(s) to the opposite side of the alarm spring(s) just moved and to the alarm spring adjacent to it. Torque as indicated in Figure 5.8.

**Figure 5.8 Moving the Alarm Spring(s) Left or Right**

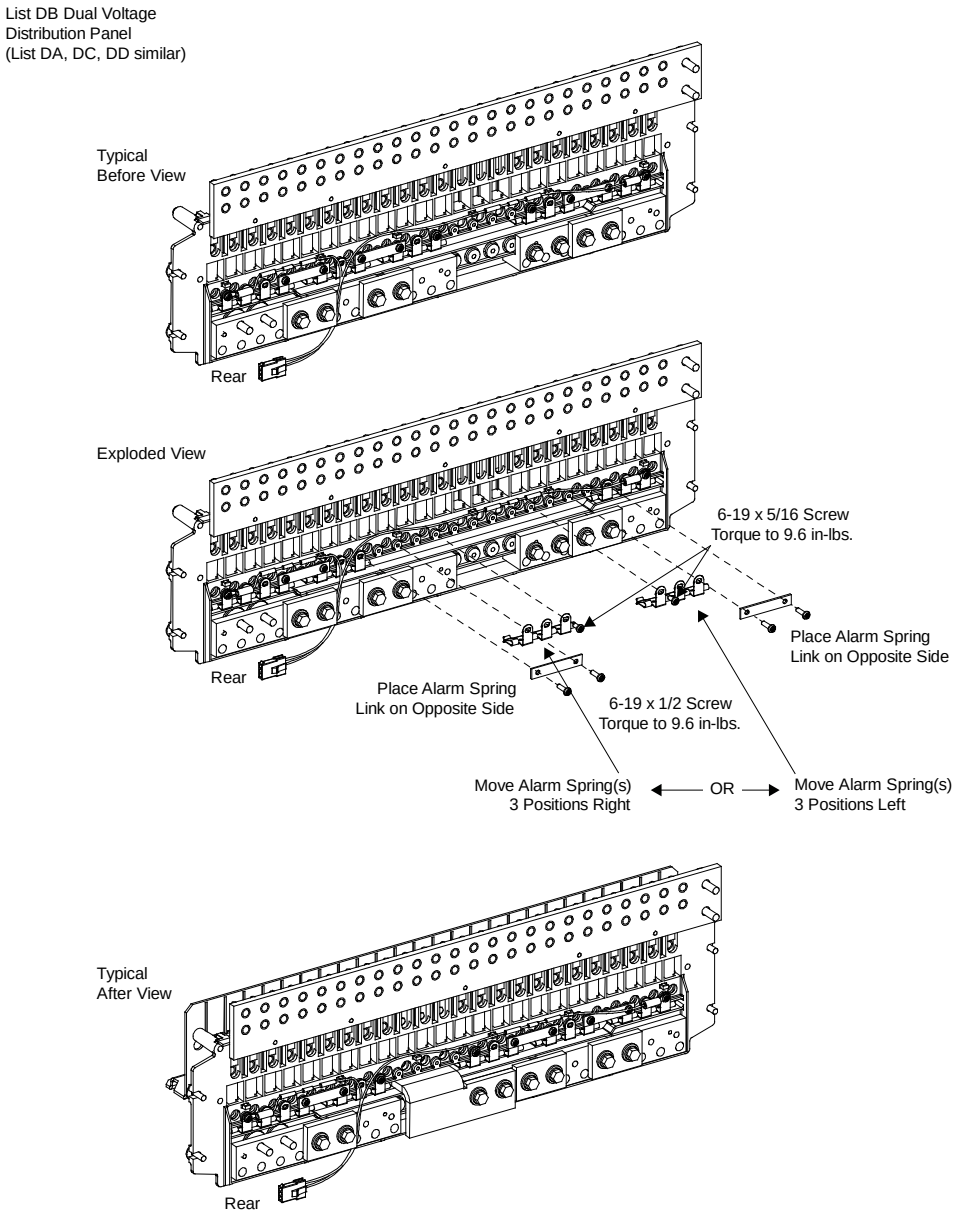



Proprietary and Confidential © 2026 Vertiv Group Corp.

## Re-Installing the -48V Input Power Busbar and Input Lead Busbars

### Procedure

1. Re-install the -48V input lead busbars. Slide the -48V input lead busbars down and into the distribution panel in the mounting locations created when the distribution device lead busbars were moved in the previous procedure.
2. Re-install the -48V input power busbar into the distribution panel in the position created when the distribution device busbar in the previous procedure was moved.
3. From the front of the distribution panel, re-install the three bolts and hardware to secure the -48V input power busbar to the -48V input lead busbars. Torque as indicated in Figure 5.9.
4. From the rear of the distribution panel, re-install the two bolts and hardware to secure the -48V input power busbar. Torque as indicated in Figure 5.9.

**Figure 5.9 Re-Installing the -48V Input Power Busbar and Input Lead Busbars**

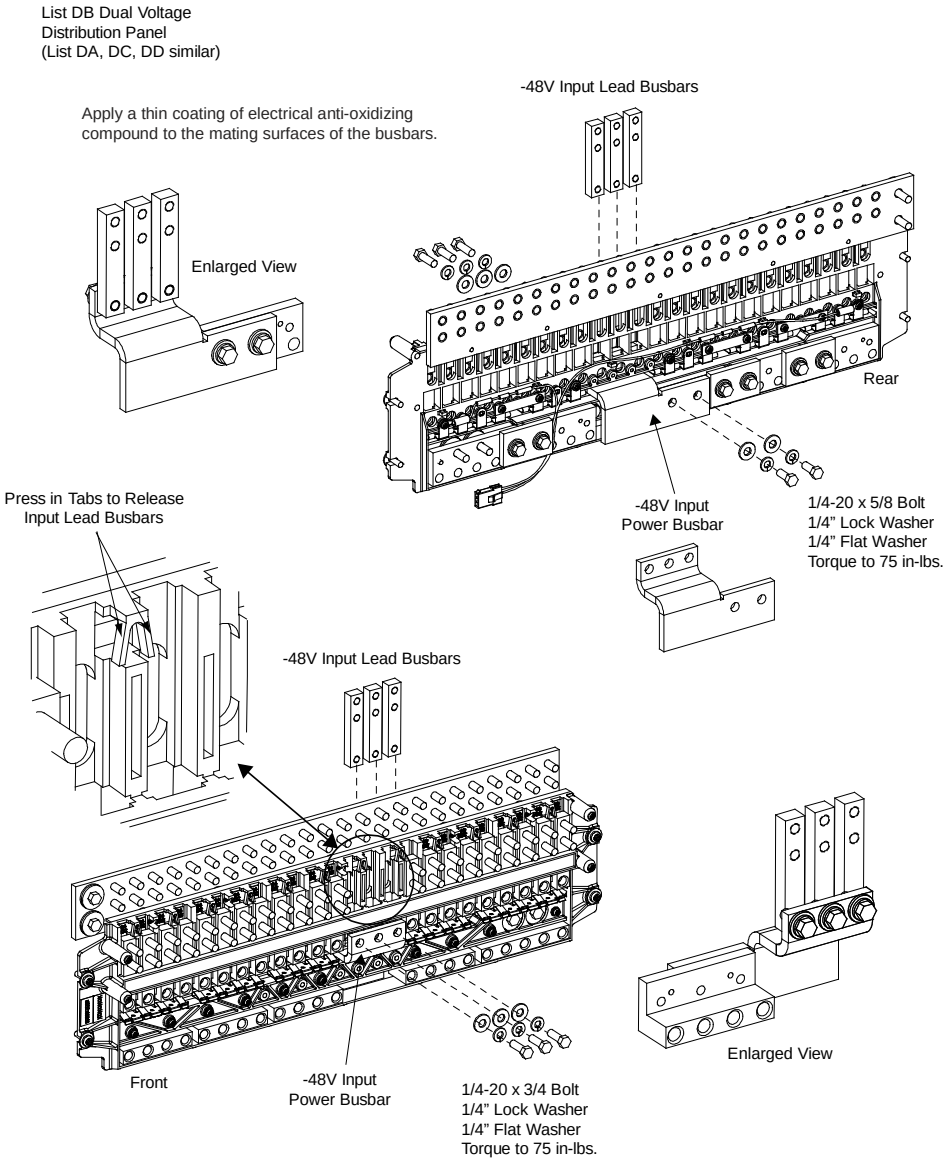

## Moving the 24V/48V Label on the Distribution Device Cover to the New Position

### Procedure

1. Move the polarity label on the distribution device cover right or left to align with the distribution positions moved in the previous procedures.

**Figure 5.10 Moving the 24V/48V Label on the Distribution Device Cover to the New Position**

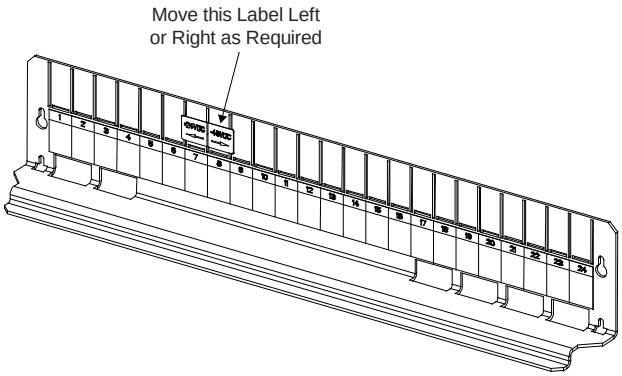


## Replacing the Distribution Panel

***NOTE!*** *In the following procedure, before making busbar-to-busbar connections, apply a thin coating of electrical anti-oxidizing compound to the mating surfaces of the busbars.*

### Procedure

1. Orient the distribution panel into the distribution cabinet, checking to ensure no wires are pinched. Replace the hardware securing the distribution panel to the distribution cabinet. Refer to Figure 5.4 for hardware build-up. Torque as indicated in Figure 5.4.
2. Reconnect the -48V jumper leads. Refer to Figure 5.4 for hardware build-up. Torque as indicated in Figure 5.4.
3. Replace the hardware securing the distribution panel's system load distribution busbar to the distribution cabinet's busbar. Refer to Figure 5.4 for hardware build-up. Torque as indicated in Figure 5.4.
4. Replace the hardware securing the distribution panel's ground busbar to the distribution cabinet's busbar. Torque as indicated in Figure 5.4.
5. Plug the in-line FA/CBA connector located near the back of the distribution panel into the mating connector half in the distribution cabinet. Refer to Figure 5.4.

**WARNING!** In the next step, observe correct polarity; otherwise equipment damage will result.

6. Reconnect the load return leads to the ground busbar.
7. Reconnect the load leads to the circuit breaker and/or fuse positions.
8. Replace the circuit breakers and/or fuseholders.
9. Replace the plastic shield covering the circuit breakers and/or fuseholders on the distribution panel.
10. Verify no circuit breaker/fuse alarms are active.
11. Close the distribution cabinet's front door. Turn the latch clockwise to secure the door.
12. Ensure that there are no local or remote alarms active on the system.


Proprietary and Confidential © 2026 Vertiv Group Corp.

## 5.5 Reconfiguring a Dual Voltage Distribution Panel (List DE, DF, DG, DH, DJ, DK)

Perform the following procedure to reconfigure a dual voltage distribution panel (List DE, DF, DG, DH, DJ, DK) to move distribution positions from one voltage to the other.

**DANGER!** Performing this procedure exposes service personnel to battery potential. Exercise extreme caution not to inadvertently contact or have any tool inadvertently contact any energized electrical termination.

***NOTE!*** *Save all removed hardware. Hardware will be re-used.*

### Removing the Distribution Panel

**Procedure**

1. Performing this procedure may activate external alarms. Do one of the following. If possible, disable these alarms. If these alarms cannot be easily disabled, notify the appropriate personnel to disregard any future alarms associated with this system while the procedure is being performed.
2. Open the distribution cabinet's front door by turning the latch in the counterclockwise position.
3. Remove the plastic shield covering the circuit breakers and/or fuseholders on the distribution panel to be removed by loosening the screws holding the shield and sliding the shield upwards.
4. Record circuit breaker and/or fuse positions and sizes.
5. Remove circuit breakers and/or fuseholders.
6. Label the load leads.
7. Disconnect and insulate all load leads from the circuit breaker and/or fuse positions.
8. Disconnect and insulate all load return leads from the ground busbar.
9. Refer to Figure 5.11 and remove the hardware securing the -48V jumper leads. Insulate and tie back these leads.
10. Refer to Figure 5.11 and locate the in-line FA/CBA connector located near the back of the distribution panel. Separate the connector halves.
11. Refer to Figure 5.11 and remove the hardware securing the distribution panel's ground busbar to the distribution cabinet's busbar.
12. Refer to Figure 5.11 and remove the hardware securing the distribution panel's system load distribution busbar to the distribution cabinet's busbar.
13. Refer to Figure 5.11 and remove the hardware securing the distribution panel to the distribution cabinet. Remove the distribution panel from the distribution cabinet.

## Reworking the Distribution Panel

You can reconfigure the distribution panel to swap +24V distribution positions for -48V distribution positions, and vice versa, in groups of four. The resulting assembly can have (0) +24V and (26) -48V, (6) +24V and (20) -48V, (10) +24V and (16) -48V, (14) +24V and (12) -48V, (18) +24V and (8) -48V, (22) +24V and (4) -48V, or (26) +24V and (0) -48V positions.

You do this by moving the shorting bus and CBA/FA alarm strap. Refer to Figure 5.12 to reconfigure the distribution panel.

Note that for a List DE distribution panel, you must also move the subsystem input power busbar as shown in Figure 5.12.

Note that if you reconfigure a distribution panel for all subsystem voltage (List DK) or all system voltage, you must also move the extra CBA/FA alarm strap stored on the far left (as viewed from the rear) to the far right position (as shown in Figure 5.12).

Note that if you reconfigure a distribution panel for all subsystem voltage (List DK), you must disconnect and insulate the system CBA/FA lead (as shown in Figure 5.12).

Note that if you reconfigure a distribution panel for all system voltage, you must disconnect and insulate the subsystem CBA/FA lead (as shown in Figure 5.12).

Note that if the panel is re-configured for all subsystem positions (List DK), the distribution cabinet's load side busbar must be removed since it is not to be connected to the distribution panel and will cause interference. Note that the busbar that is removed should be retained in the event that the panel is re-configured at a later date to revert back to a panel with some subsystem positions.


Proprietary and Confidential © 2026 Vertiv Group Corp.

**Figure 5.11 Removing/Installing the Distribution Panel**

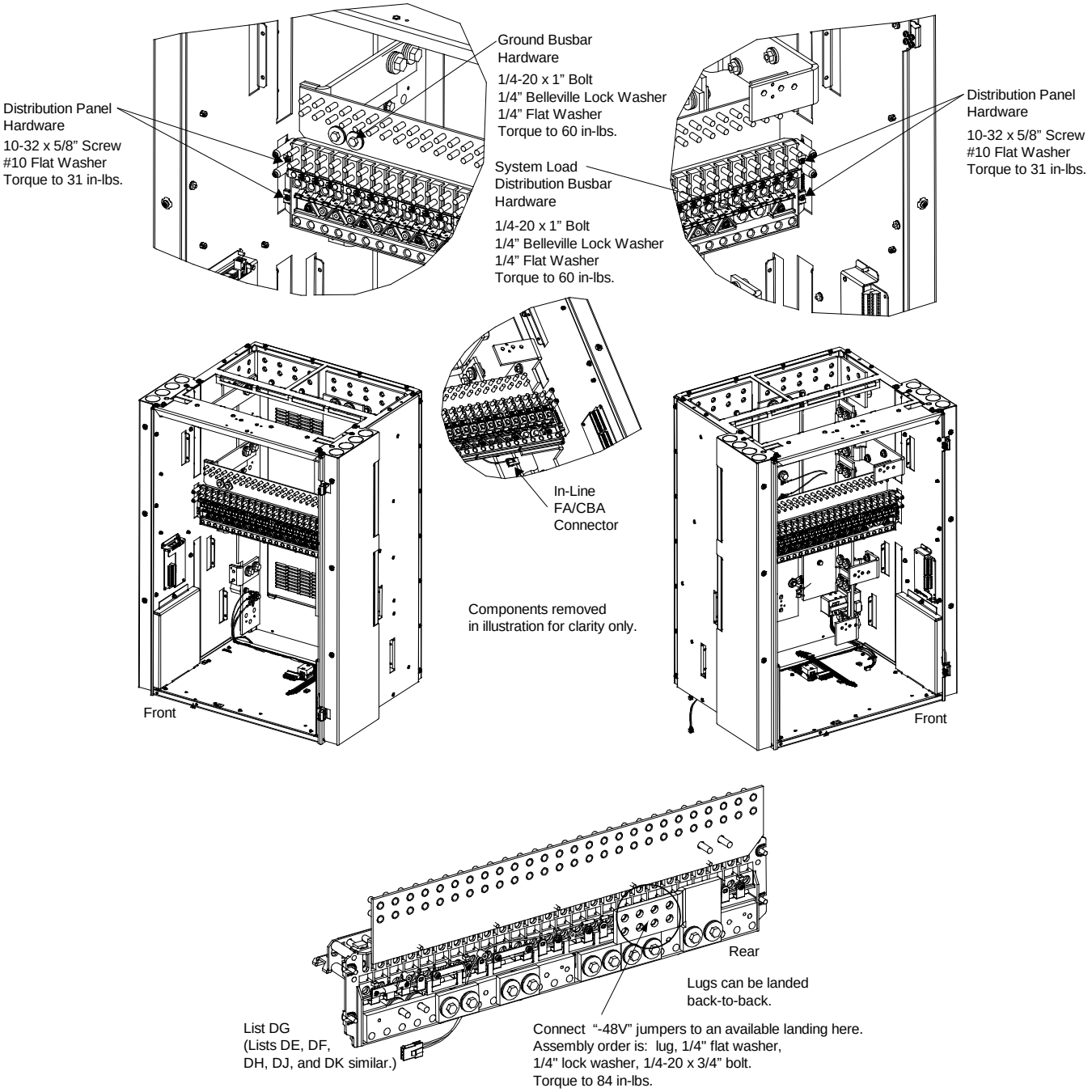

**Figure 5.12 Reworking the Distribution Panel (cont'd on next page)**

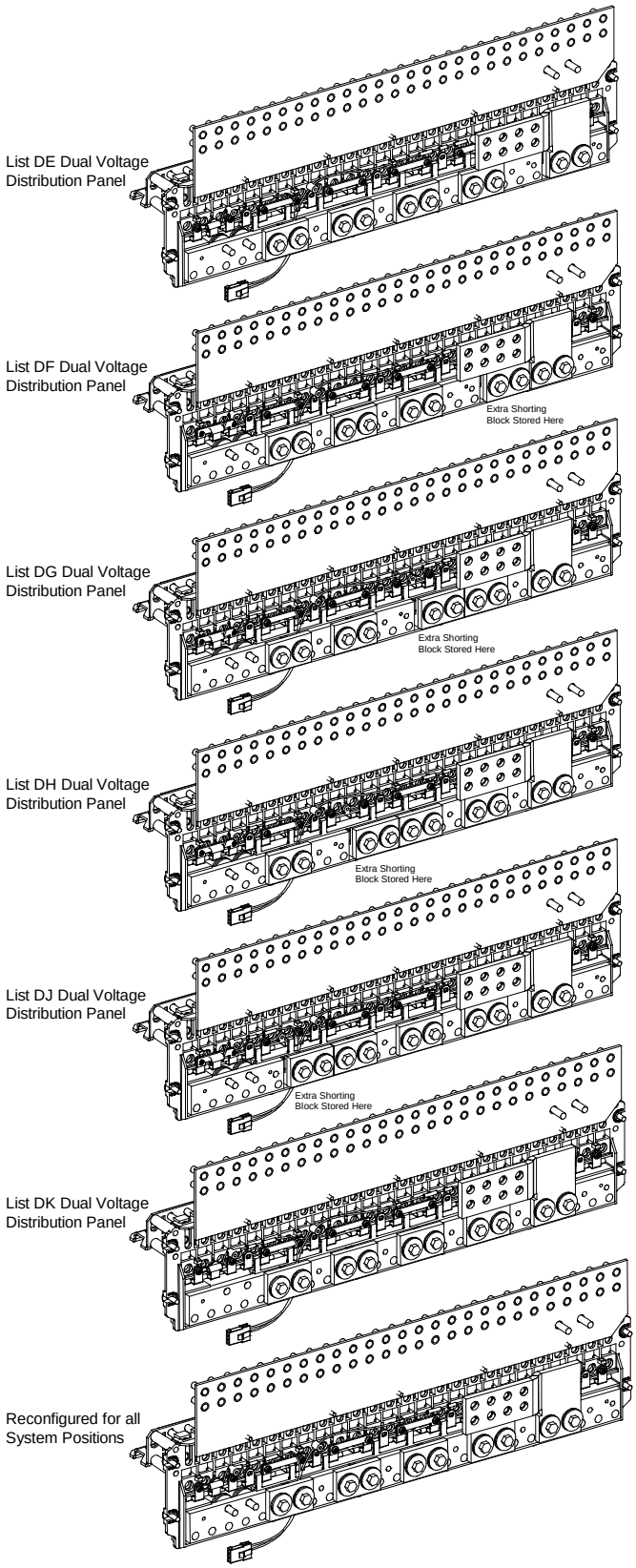



Proprietary and Confidential © 2026 Vertiv Group Corp.

**Figure 5.12 Reworking the Distribution Panel (cont'd from previous page, cont'd on next page)**

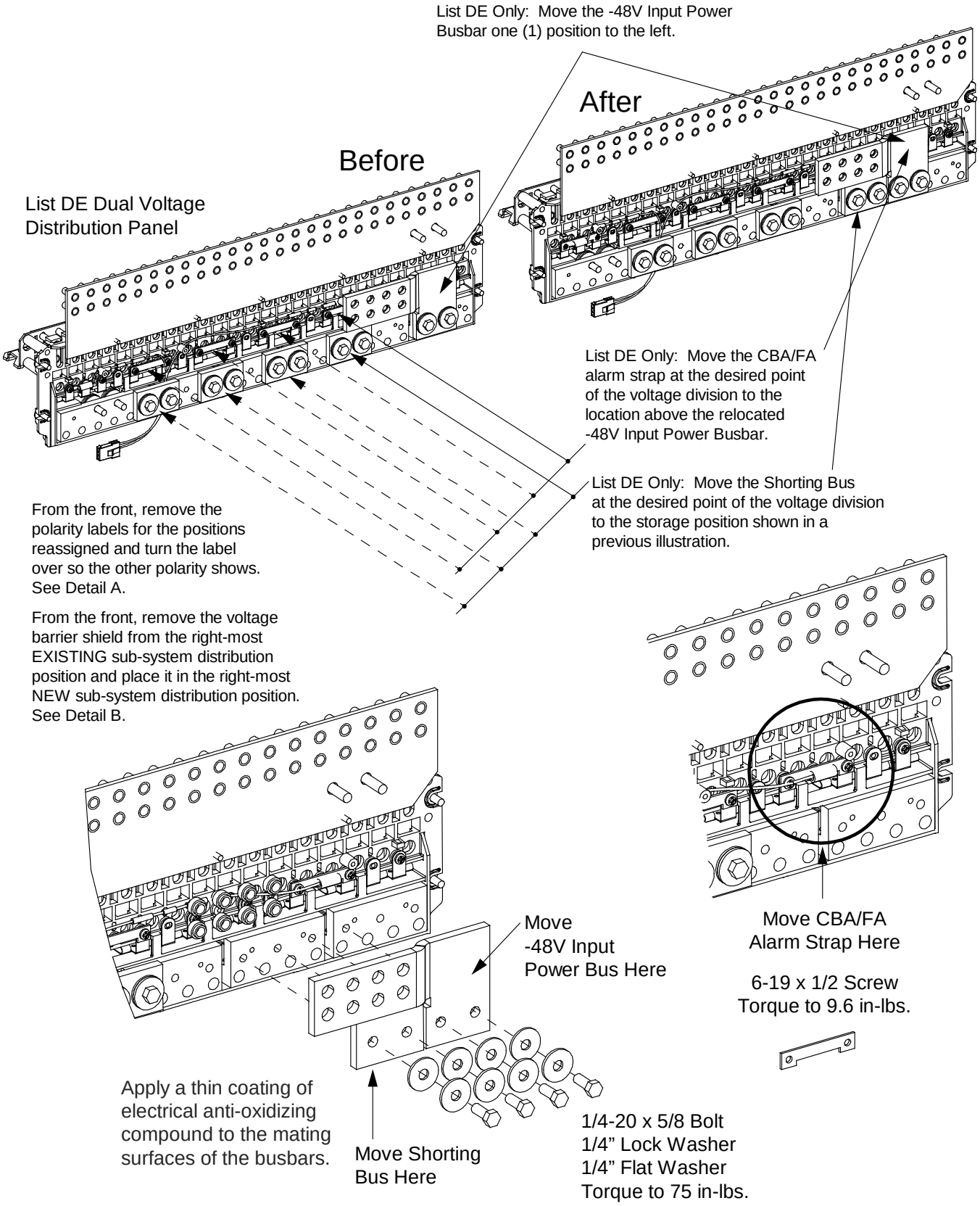

**Figure 5.12 Reworking the Distribution Panel (cont'd from previous page, cont'd on next page)**

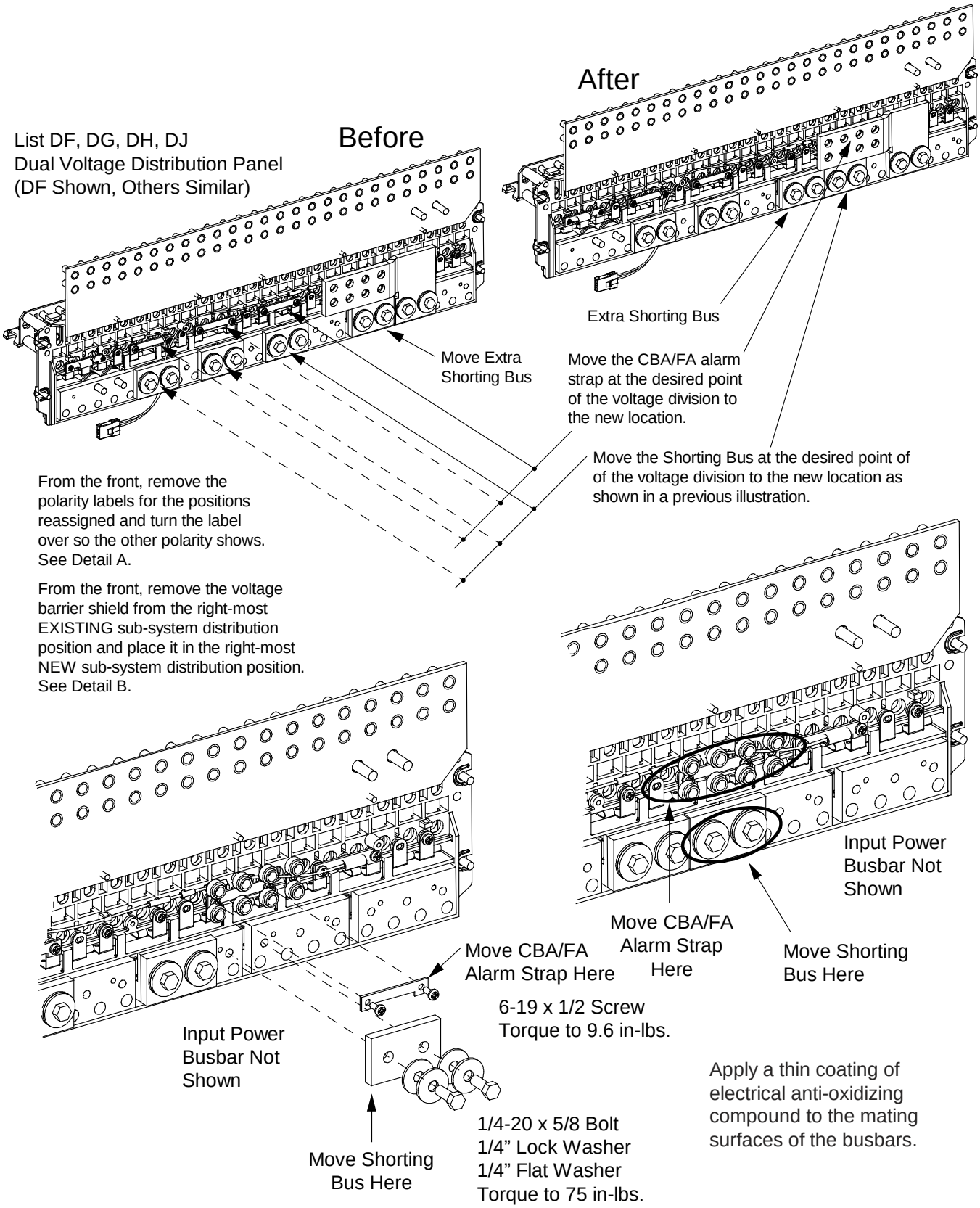



Proprietary and Confidential © 2026 Vertiv Group Corp.

**Figure 5.12 Reworking the Distribution Panel (cont'd from previous page, cont'd on next page)**

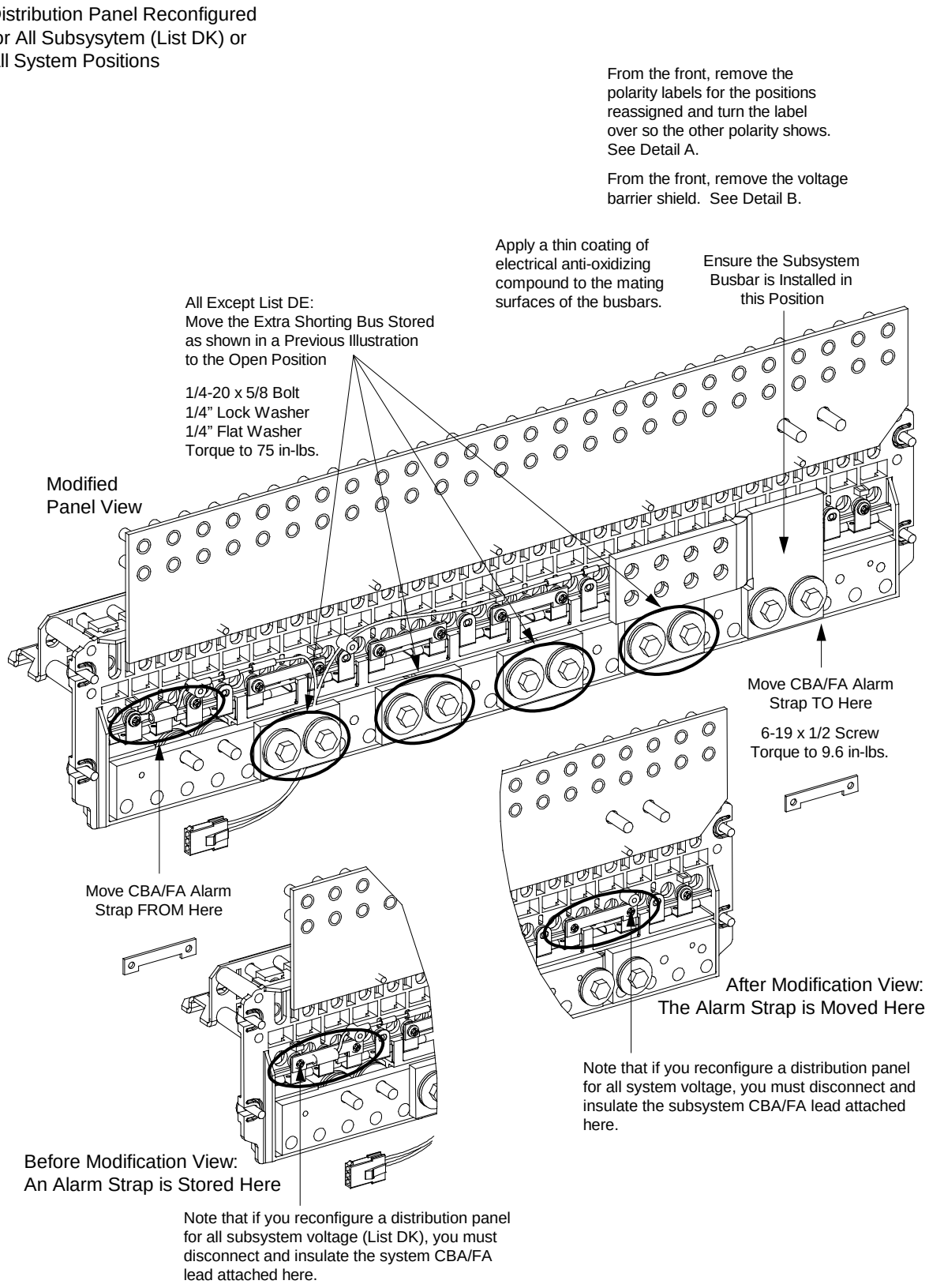

**Figure 5.12 Reworking the Distribution Panel (cont'd from previous page)**

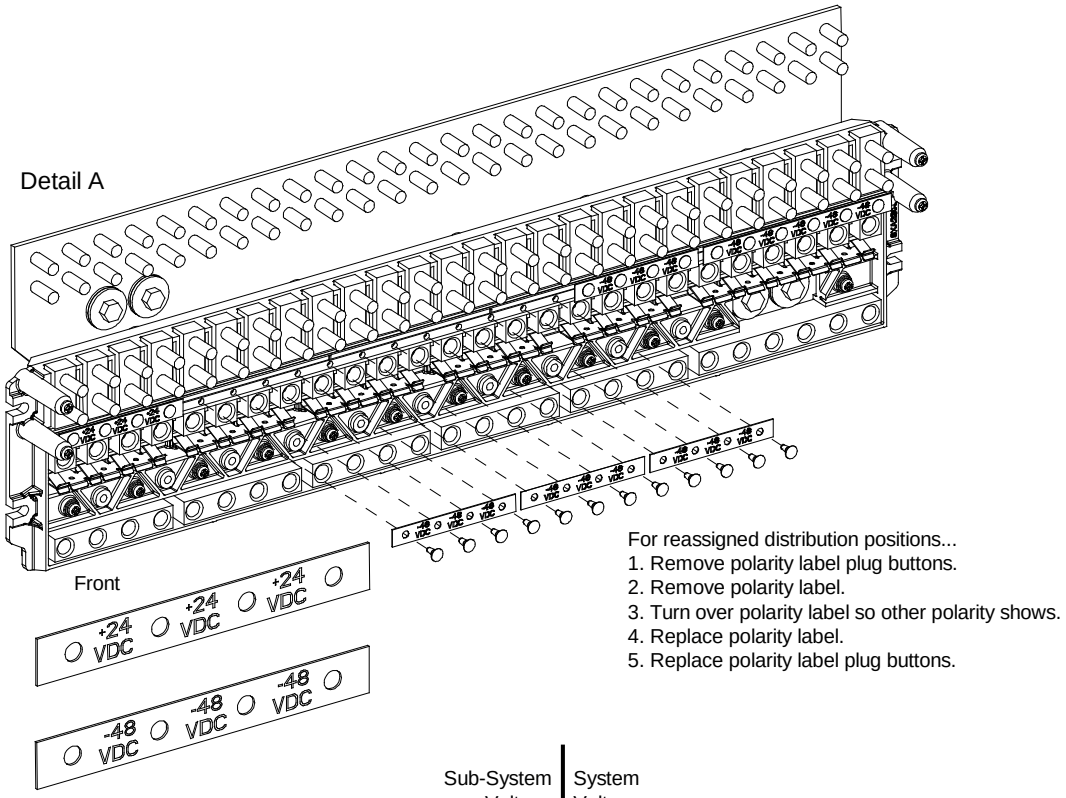


For reassigned distribution positions...
1. Remove polarity label plug buttons.
2. Remove polarity label.
3. Turn over polarity label so other polarity shows.
4. Replace polarity label.
5. Replace polarity label plug buttons.

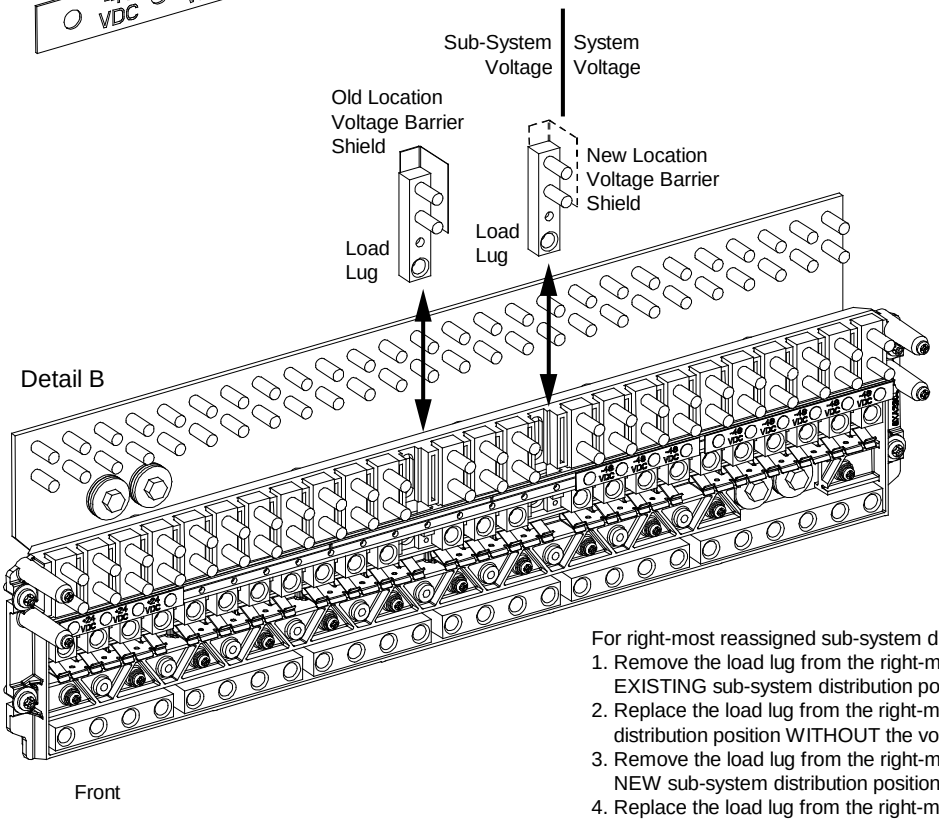


For right-most reassigned sub-system distribution position...
1. Remove the load lug from the right-most EXISTING sub-system distribution position.
2. Replace the load lug from the right-most EXISTING sub-system distribution position WITHOUT the voltage barrier shield.
3. Remove the load lug from the right-most NEW sub-system distribution position.
4. Replace the load lug from the right-most NEW sub-system distribution position WITH the voltage barrier shield.


Proprietary and Confidential © 2026 Vertiv Group Corp.

## Replacing the Distribution Panel

***NOTE!*** *In the following procedure, before making busbar-to-busbar connections, apply a thin coating of electrical anti-oxidizing compound to the mating surfaces of the busbars.*

### Procedure

***NOTE!*** *If the panel is re-configured for all subsystem positions (List DK), the distribution cabinet's load side busbar must be removed since it is not to be connected to the distribution panel and will cause interference. Note that the busbar that is removed should be retained in the event that the panel is re-configured at a later date to revert back to a panel with some subsystem positions.*

1. If the panel is re-configured for all subsystem positions, remove the distribution cabinet's load side busbar. Save this busbar and hardware for future use.
2. Orient the distribution panel into the distribution cabinet, checking to ensure no wires are pinched. Replace the hardware securing the distribution panel to the distribution cabinet. Refer to Figure 5.11 for hardware build-up. Torque as indicated in Figure 5.11.
3. Reconnect the -48V jumper leads. Refer to Figure 5.11 for hardware build-up. Torque as indicated in Figure 5.11. For a panel re-configured to all +24V positions, the -48V jumper leads MUST not be used. They should be retained at the site for future use if necessary.
4. In all except panels re-configured for all subsystem positions (List DK), replace the hardware securing the distribution panel's system load distribution busbar to the distribution cabinet's busbar. Refer to Figure 5.11 for hardware build-up. Torque as indicated in Figure 5.11.
5. Replace the hardware securing the distribution panel's ground busbar to the distribution cabinet's busbar. Torque as indicated in Figure 5.11.
6. Plug the in-line FA/CBA connector located near the back of the distribution panel into the mating connector half in the distribution cabinet. Refer to Figure 5.11.

**WARNING!** In the next step, observe correct polarity; otherwise equipment damage will result.

7. Reconnect the load return leads to the ground busbar.
8. Reconnect the load leads to the circuit breaker and/or fuse positions.
9. Replace the circuit breakers and/or fuseholders.
10. Replace the plastic shield covering the circuit breakers and/or fuseholders on the distribution panel.
11. Verify no circuit breaker/fuse alarms are active.
12. Close the distribution cabinet's front door. Turn the latch clockwise to secure the door.
13. Ensure that there are no local or remote alarms active on the system.

## 5.6 Changing the Controller's LVD Control Level for a Contactor

The controller has two available LVD control levels (LVD1 and LVD2). The level used to control a contactor is determined by which connector on the LVD circuit card its control leads are plugged into. To change the LVD control level for a contactor, simply switch which LVD connector it is plugged into (if an open connector is available) on the LVD circuit card. Refer to Figure 6.23 and Figure 6.24 for connector location and function.

***NOTE!*** *DO NOT change a Low Voltage Load Disconnect contactor to LVD Control Level 2 (LVD2) if the system is furnished with a Low Voltage Battery Disconnect contactor.*

## 5.7 Installing Optional Second IB2 (Controller Interface Board) or Optional Second EIB (Controller Extended Interface Board)

Refer to the procedure in the Installation Manual (IM581127000).

# 6 Troubleshooting and Repair

***NOTE!*** *If List A1 and/or List A2 inverters are provided, refer to the separate inverter instruction manuals furnished with this power system for troubleshooting and repair procedures. If List D2 and/or D3 DC-DC Converters are provided, refer to the separate DC-DC Converter instruction manuals furnished with this power system for troubleshooting and repair procedures.*

## 6.1 Contact Information

Refer to Section 4154 (provided with your customer documentation) for support contact information.

## 6.2 Controller, Rectifiers, and Optional Converters

For troubleshooting and repair instructions on these units, refer to the following documents.

- ACU+ Controller Instructions (UM1M820BNA)
- NCU Controller Instructions (UM1M830BNA)
- Rectifier User Instructions (UM1R243000)
- Converter User Instructions (UM1C24481500)

## 6.3 Controller Configuration

If any controller configuration settings were changed, refer to the ACU+ Instructions (UM1M820BNA) or NCU Instructions (UM1M830BNA) and save a copy of the configuration file. This file can be used to restore the controller settings, if required, at a later date.

- Note that provided on a USB drive furnished with the system is a controller configuration drawing (C-drawing) and the controller configuration files loaded into the controller as shipped.

## 6.4 System Troubleshooting Information

This system is designed for ease in troubleshooting and repair. The various indicators as described in "Local Controls and Indicators" on page 5 and in the Controller and Rectifier Instructions are designed to isolate failure to a specific element. Once the faulty element has been identified, refer to "Replacement Information" on page 36 and "Replacement Procedures" on page 36.


Proprietary and Confidential © 2026 Vertiv Group Corp.

## Troubleshooting Alarm Conditions on the Controller

The controller displays alarm conditions as listed in the "Available Alarms" or "Resolving Alarms" section of the controller's User Manual. Programmable external alarm relays are also available. Refer to the System Installation Instructions (IM581127000) and the configuration drawing (C-drawing) supplied with your power system documentation for your alarm relay configurations.

The controller's *Active Alarm* and *Alarm History* submenus allow the User to view alarm details. Refer to the ACU+ Instructions (UM1M820BNA) or NCU Instructions (UM1M830BNA) to access these menus.

## Checking the Controller's Current Limit Point after Adding or Removing a Rectifier Module

If a rectifier module is added to the power system, the system current limit point will automatically increase by the percentage each existing rectifier was set to provide prior to the addition.

If a rectifier module is removed from the system (and the Rect Comm Fail alarm is reset), the current limit point will remain unchanged unless the capacity of the remaining rectifiers is not sufficient to maintain the present current limit point. If that happens, the current limit point will automatically increase to the maximum (121% of the remaining rectifiers).

It is recommended that the current limit point be checked whenever a rectifier module is added to or removed from the power system.

When setting total rectifier current limit, the set point to each unit is the total set point divided by the number of units. For example, if the system contains five rectifiers and the current limit is set to 150 amps then each rectifier has a current limit set point of 30 amps. If one or more rectifiers are removed or fail it will take several seconds for the individual set points to the remaining rectifiers to be reset. In the example given, if one rectifier is removed the current limit set point will drop to 120 amps (30 amps times four remaining rectifiers) until the controller can send updated set points to the remaining rectifiers. This takes a couple communication cycles (several seconds) after which each rectifier would have a new set point of 37.5 amps for a total of 150 amps. The total current limit of the rectifiers should not be set such that the loss of the redundant rectifiers will cause this temporary set point to drop below the actual maximum expected load. If batteries are used on the rectifier output, the batteries should support the load until the current limit set points can be re-established due to loss of a rectifier.

Refer to the ACU+ Instructions (UM1M820BNA) or NCU Instructions (UM1M830BNA) for a procedure.

## Clearing a Rectifier Communications Fail Alarm after Removing a Rectifier

If a rectifier module is removed from the system, a rectifier communications failure alarm is generated. If the rectifier module will not be replaced, the alarm should be cleared.

Refer to the ACU+ Instructions (UM1M820BNA) or NCU Instructions (UM1M830BNA) for a procedure.

## Clearing a Converter Communications Fail Alarm after Removing a Converter

If a converter module is removed from the system, a converter communications failure alarm is generated. If the converter module will not be replaced, the alarm should be cleared.

Refer to the ACU+ Instructions (UM1M820BNA) or NCU Instructions (UM1M830BNA) for a procedure.

## Clearing a Rectifier Lost Alarm

If the controller resets while a rectifier communications fail alarm is active, the rectifier communications fail alarm is replaced with a rectifier lost alarm.

Refer to the ACU+ Instructions (UM1M820BNA) or NCU Instructions (UM1M830BNA) for a procedure to clear the alarm.

## Clearing a Converter Lost Alarm

If the controller resets while a converter communications fail alarm is active, the converter communications fail alarm is replaced with a converter lost alarm.

Refer to the ACU+ Instructions (UM1M820BNA) or NCU Instructions (UM1M830BNA) for a procedure to clear the alarm.

Proprietary and Confidential © 2026 Vertiv Group Corp.

## 6.5 Replacement Information

### Replacement Assemblies

When a trouble symptom is localized to a faulty rectifier module, converter module, controller, or system circuit card; that particular device or circuit card should be replaced in its entirety. No attempt should be made to troubleshoot or repair individual components on any rectifier module, converter module, controller, or circuit card.

Refer to SAG581127000 (System Application Guide) for replacement part numbers.

## 6.6 Replacement Procedures

**DANGER!** Adhere to the "Important Safety Instructions" presented at the front of this document.

### 6.6.1 Replacing a Rectifier or Converter Module

Refer to the Rectifier User Instructions (UM1R243000) or Converter User Instructions (UM1C24481500) for a rectifier and converter module replacement procedure. Refer also to "System Troubleshooting Information" on page 34.

The rectifier or converter module being replaced is assigned by the controller the lowest available identification number. If desired, you can change the identification number. Refer to the ACU+ Instructions (UM1M820BNA) or NCU Instructions (UM1M830BNA) for a procedure.

### 6.6.2 Replacing a List A1 or A2 Inverter

**DANGER!** All sources of AC and DC power must be completely disconnected from the Inverter(s) being replaced before performing the replacement procedure. For all steps in this procedure, before contacting any exposed wire or terminal, use a voltmeter to verify no AC or DC voltages are present.

When performing the following procedure, refer to Figure 6.1 through Figure 6.4.

#### Preparation

1. In the power system Distribution Cabinet, turn OFF the circuit breaker that supplies DC input power to the Inverter being replaced.
2. Open the protective or other disconnect device that supplies AC input power to the Inverter being replaced. Use Lockout/Tagout procedures to protect personnel.

#### Removing the Inverter

1. Remove the rear cover from the system to access the Inverter.
2. Remove the rear cover of the Inverter. To do so, remove the four screws that secure it. For List A2, retain the receptacles/wires/inductor/rear cover assembly for installation in the replacement Inverter.
3. Verify with a DC voltmeter that no voltage is present across the DC input terminals of the Inverter, or between either DC input terminal and chassis ground. If voltage is present, locate and completely disconnect the voltage source before proceeding.
4. Verify with an AC voltmeter that no voltage is present across the AC input terminals of the Inverter, or between either AC input terminal and chassis ground. If voltage is present, locate and completely disconnect the voltage source before proceeding.
5. Disconnect the two (2) DC INPUT cables from the Inverter, as shown in the appropriate Figure 6.1 or Figure 6.2. Disconnect also the 7-1/4" black 22 AWG alarm jumper from the BAT– terminal. Remove the two (2) DC INPUT cables and cable clamps from the Inverter. As you perform this step, also disconnect and remove the capacitor pigtail assemblies from the Inverter, as


Proprietary and Confidential © 2026 Vertiv Group Corp.

shown in the appropriate Figure 6.1 or Figure 6.2. RETAIN THE PIGTAIL ASSEMBLIES FOR INSTALLATION IN THE REPLACEMENT INVERTER.

6. Disconnect the three (3) conductors of the AC INPUT cable from the Inverter, as shown in the appropriate Figure 6.1 or Figure 6.2. As you perform this step, also disconnect and remove the capacitor pigtail assemblies from the Inverter, as shown in the appropriate Figure 6.1 or Figure 6.2. RETAIN THE PIGTAIL ASSEMBLIES FOR INSTALLATION IN THE REPLACEMENT INVERTER.

7. For List A1 Only: Disconnect the three (3) conductors of the AC OUTPUT cable from the Inverter, as shown in Figure 6.1. Remove the cable and cable clamp from the Inverter. As you perform this step, also disconnect and remove the capacitor pigtail assemblies from the Inverter, as shown in the appropriate Figure 6.1 or Figure 6.2. RETAIN THE PIGTAIL ASSEMBLIES FOR INSTALLATION IN THE REPLACEMENT INVERTER.

   For List A2 Only: Disconnect the three (3) conductors of the AC output receptacles that are located on the rear cover. See Figure 6.2. Retain the receptacles/wires/inductor/rear cover assembly for installation in the replacement Inverter. As you perform this step, also disconnect and remove the capacitor pigtail assemblies from the Inverter, as shown in the appropriate Figure 6.1 or Figure 6.2. RETAIN THE PIGTAIL ASSEMBLIES FOR INSTALLATION IN THE REPLACEMENT INVERTER.

8. Disconnect the alarm wiring from the alarm terminal block, as shown in the appropriate Figure 6.1 or Figure 6.2. RETAIN ALARM JUMPERS FOR INSTALLATION IN THE REPLACEMENT INVERTER.

9. From the front, remove the four (4) screws that secure the Inverter to the equipment rack. Remove the Inverter from the Power System. See Figure 6.4.

## Installing the Replacement Inverter

1. Remove the two (2) mounting brackets from the Inverter being replaced. Install these brackets on the new Inverter. Refer to Figure 6.3.

2. Position the Inverter in the Power System. Secure with previously removed hardware as shown in Figure 6.4. Ensure that ground washers are installed at the locations shown in the figure.

3. Remove the rear cover of the Inverter.

4. If present in the new Inverter, remove plug buttons from the holes into which cable clamps will be installed; three (3) for List A1, and two (2) for List A2.

5. For List A1 Only: Install the AC OUTPUT cable and cable clamp in the Inverter. Connect the three (3) conductors. Refer to Figure 6.1. As you perform this step, also install and connect the capacitor pigtail assemblies removed from the existing Inverter, as shown in the appropriate Figure 6.1 or Figure 6.2.

   For List A2 Only: Connect the wires from the AC Output receptacles on the rear cover, as shown in Figure 6.2. Note: Use the assembly with the inductor removed from the existing Inverter. As you perform this step, also install and connect the capacitor pigtail assemblies removed from the existing Inverter, as shown in the appropriate Figure 6.1 or Figure 6.2.

6. If the replacement Inverter was shipped with a jumper wire connected between the Neutral and Ground terminals of the AC Input terminal block, remove and discard the jumper. The jumper is not used in this application.

7. Install the AC INPUT cable and cable clamp in the Inverter. Connect the three (3) conductors. Refer to the appropriate Figure 6.1 or Figure 6.2. As you perform this step, also install and connect the capacitor pigtail assemblies removed from the existing Inverter, as shown in the appropriate Figure 6.1 or Figure 6.2.

**WARNING!** In the next step, observe correct polarity.

8. Install the two (2) DC INPUT cables, alarm cable and cable clamps in the Inverter. Connect the DC Input cables to the BAT+ and BAT– terminals. Connect only positive to positive, and negative to negative. Connect also the 7-1/4" black 22 AWG alarm jumper to the BAT– terminal. Refer to the appropriate Figure 6.1 or Figure 6.2. As you perform this step, also install and connect the capacitor pigtail assemblies removed from the existing Inverter, as shown in the appropriate Figure 6.1 or Figure 6.2.
9. Connect the alarm wiring to the alarm terminal block, as shown the appropriate Figure 6.1 or Figure 6.2.
10. Install the rear cover on the Inverter. Secure with the four (4) previously removed screws.
11. Replace the rear cover to the system that was removed to access the Inverter.

## Restarting the Inverter

1. Close the protective or other disconnect device(s) that supplies AC input power to the Inverter being replaced.
2. In the power system Distribution Cabinet, turn ON the circuit breaker that supplies DC input power to the Inverter being replaced.
3. Refer to the separate instruction manual supplied with the Inverter for a startup procedure.
4. Ensure no alarms are active.
5. This completes the replacement procedure.


Proprietary and Confidential © 2026 Vertiv Group Corp.

**Figure 6.1: Wiring Details, List A1**

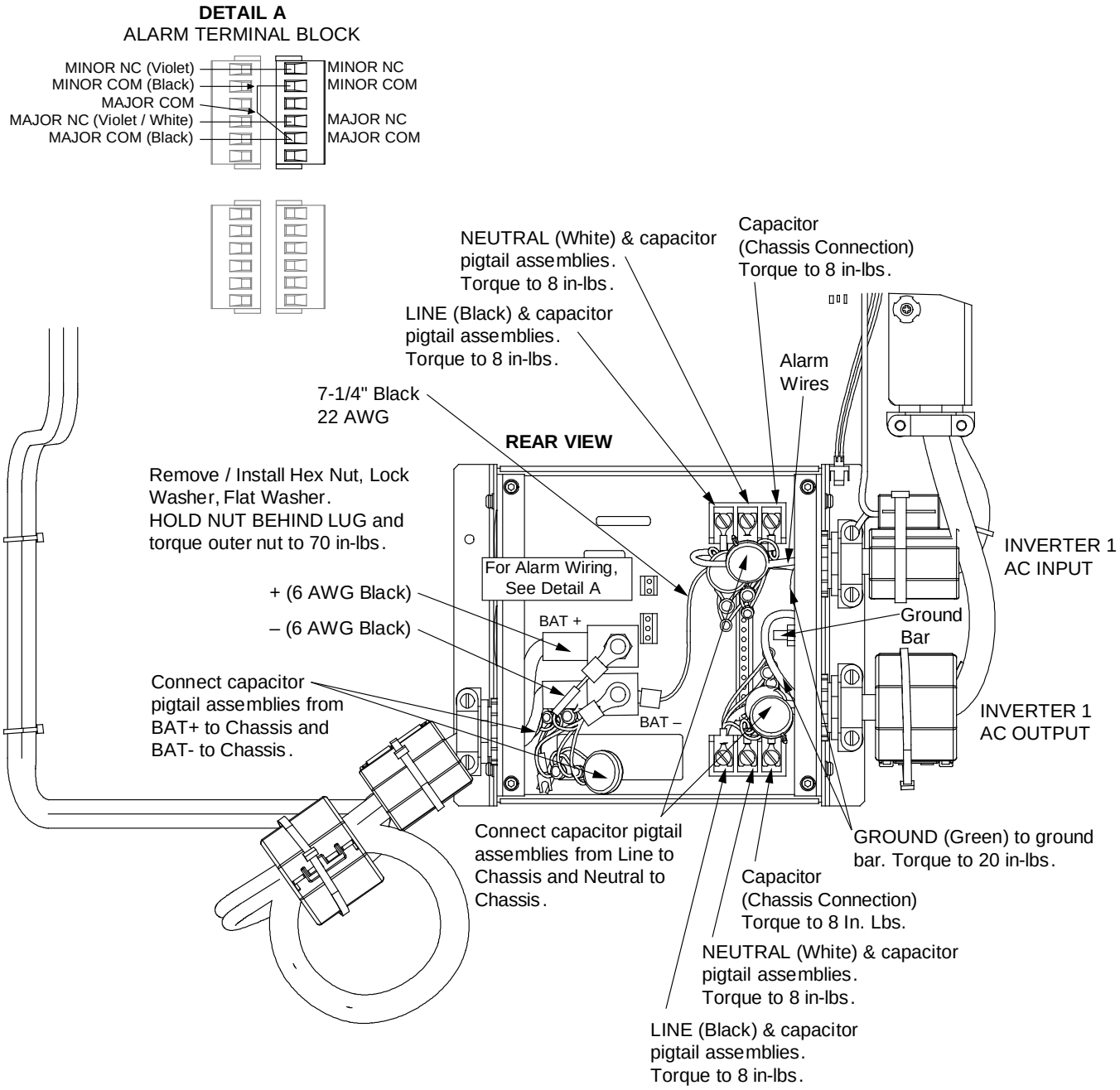

**Figure 6.2: Wiring Details, List A2**

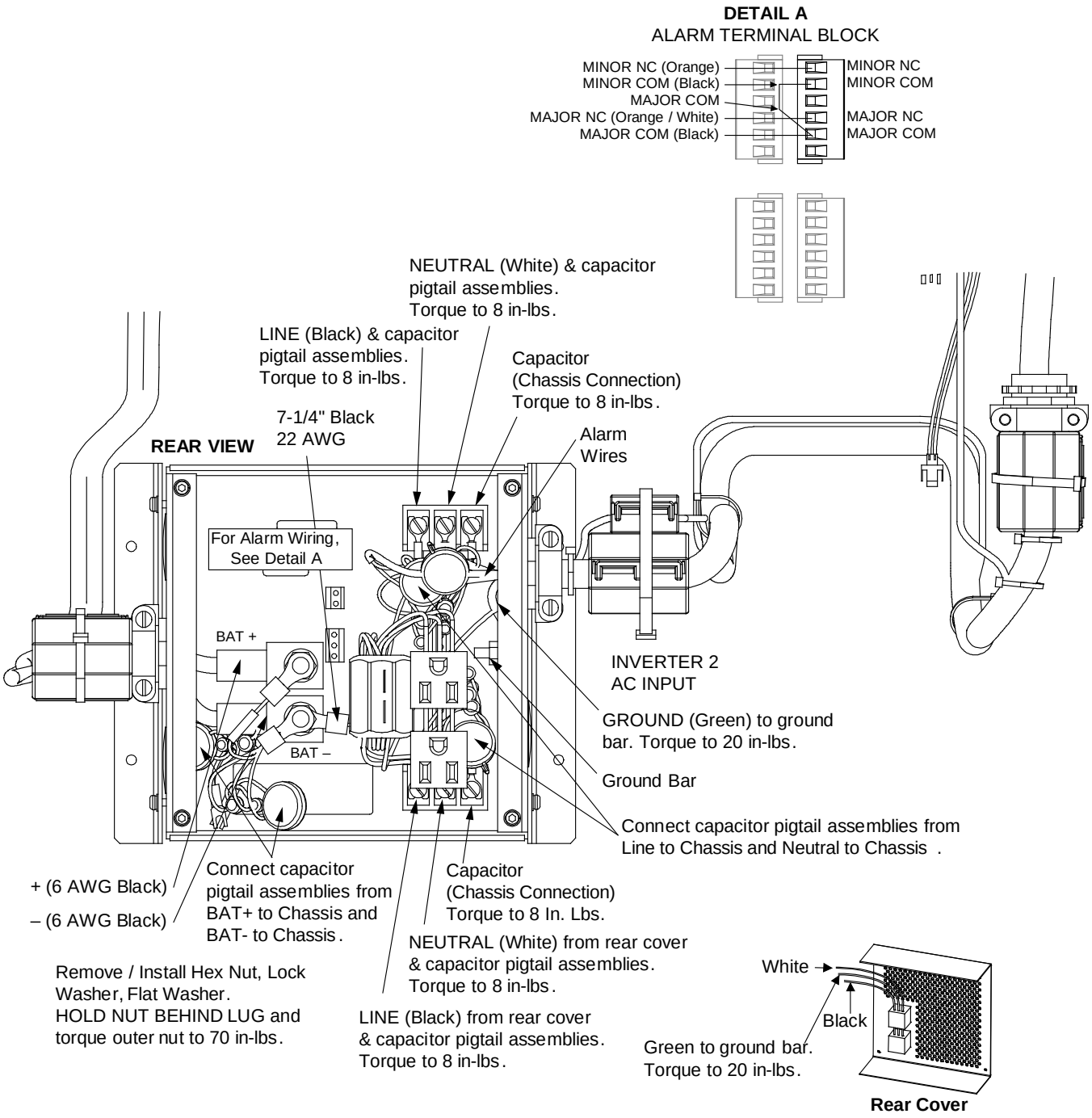



Proprietary and Confidential © 2026 Vertiv Group Corp.

**Figure 6.3: List A1, A2 Mounting Bracket Installation Details (List A1 Shown)**

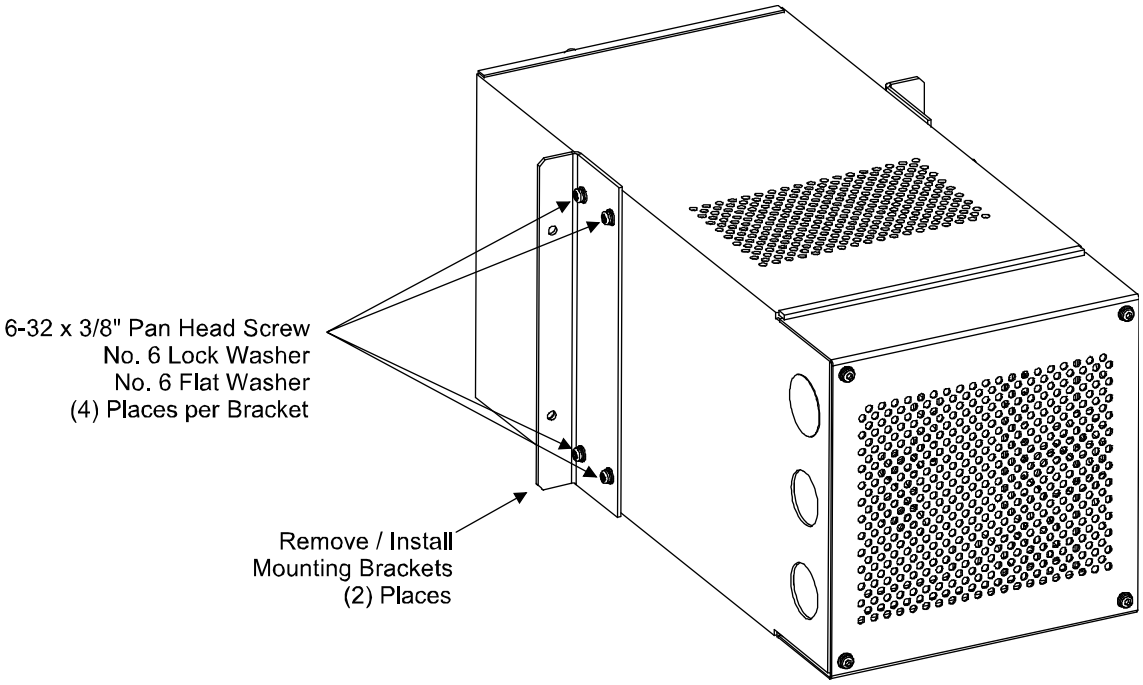


**Figure 6.4: List A1, A2 Mounting Details**

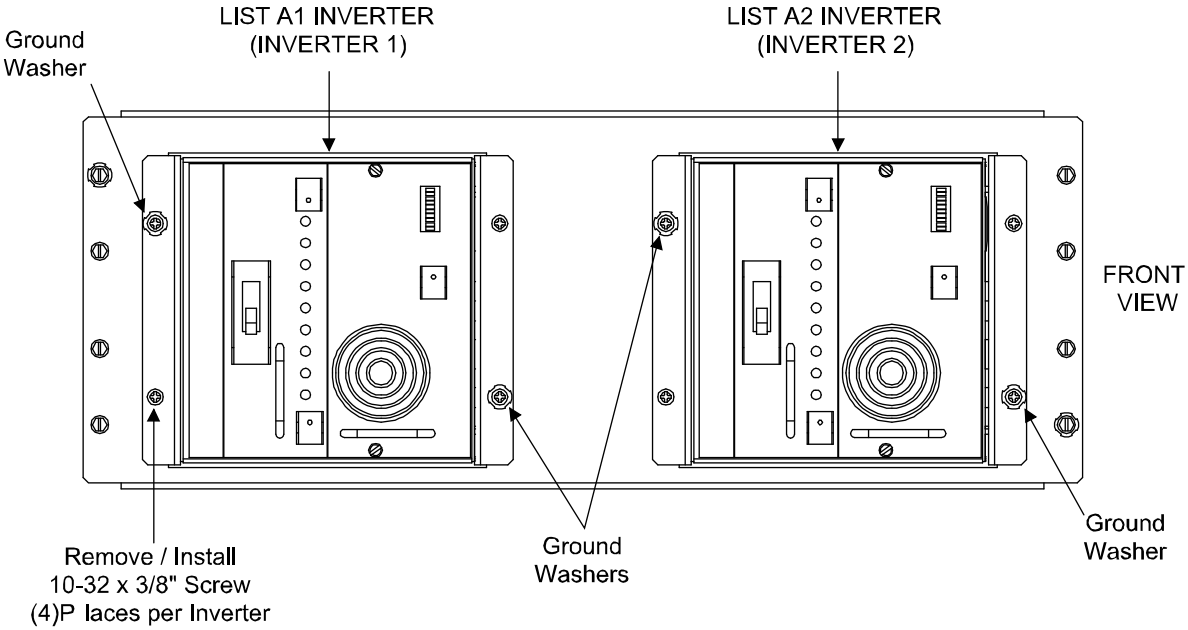

### 6.6.3 Inverter Module Replacement

***NOTE!*** *The inverter module does not and cannot be quickly inserted into the cage. There is a three (3) step event process that occurs during installation of the inverter module.*

1. *The input capacitors are precharged.*
2. *All electrical connections to the inverter module occur.*
3. *The inverter module is powered up and brought online with the rest of the inverter modules.*

**Read the following before performing the procedure below.**

In order for the above three (3) events to occur in the correct sequence and timing, the inverter module front panel screws are designed to stop the installation of the inverter module before any electrical contact takes place in the card edge connector. As the inverter module front panel screws are tightened, the above events are forced to happen in sequence and fairly slow. In our experience most of the problems occur because people try to install the inverter module just as they would a rectifier module, which has no input capacitance. Ensure you are using the process below as you are performing the replacement procedure.

1. The inverter module should be placed in the cage just to the point of starting the inverter module front panel thumb screws.
2. Turn the bottom screw in two (2) turns.

DO NOT ATTEMPT TO SCREW ALL THE WAY AT ONCE, SCREW STRIPPING MAY RESULT.

3. Turn the top screw in two (2) turns.

DO NOT ATTEMPT TO SCREW ALL THE WAY AT ONCE, SCREW STRIPPING MAY RESULT.

4. Repeat step 2 and step 3 above until the inverter module is completely seated.

You may see the inverter fail LED illuminate during the seating process, this is normal. When fully seated, the bottom LED of the inverter module illuminates, and depending on the load, many bars of the LED bar graph illuminate as the power module levels current with the rest of the system.

**Procedure**

1. Shut off power to the inverter module.

***NOTE!*** *Step 1 only for non-redundant system. In redundant systems, modules are "Hot-Insertable".*

2. Loosen the two (2) thumb screws on the inverter module's front panel. You need to loosen each thumb screw two (2) turns at a time. They should become completely loose from the rack but remain captive in the inverter module's front panel.
3. Remove the inverter module by pulling on the front handle. Note some force is required.
4. Install the new inverter module ensuring that the ribs on the edge of heatsink are in the grooves of the plastic slides.
5. Slide the inverter module in until it just touches the rear connector (first sign of resistance). Exert pressure slowly on the front of the inverter module (over a 10 second period) until the module enters the connector.
6. Seat the inverter module firmly into the connector and tighten the two front panel thumb screws. You need to tighten each thumb screw two (2) turns at a time. The inverter will not seat in the connector until the thumb screws are completely tighten into the rack.
7. The inverter module should power up and level with the other inverter module(s).


Proprietary and Confidential © 2026 Vertiv Group Corp.

### 6.6.4 Transfer Switch Replacement

**Procedure**

1. Shut off AC and DC power to inverter.
2. Remove two screws holding transfer switch.
3. Remove transfer switch by pulling on the handle. Some force will be required.
4. Install new module ensuring the PCB is in the grooves of the plastic slides.
5. Seat module firmly into connector and re-insert front panel screws.
6. Apply AC and DC power and set primary select switch as desired.
7. Ensure no alarms are active.

### 6.6.5 Replacing a List D2 or D3 DC-DC Converter

**DANGER!** DC power must be disconnected from the DC-DC Converter being replaced before performing the replacement procedure. Read and follow the admonishments at the beginning of this section. For all steps in this procedure, before contacting any exposed wire or terminal, use a voltmeter to verify no DC voltages are present.

Refer to System Application Guide SAG581127000 for DC-DC Converter part numbers.

When performing the following procedure, refer to Figure 6.5 and Figure 6.6.

1. In the power system Distribution Cabinet, turn OFF the circuit breaker that supplies DC input power to the Converter being replaced.
2. Disconnect all wiring from the terminal block on the Converter.
3. Remove the four (4) screws that secure the Converter to its mounting panel. Remove the Converter.
4. Install the new Converter. Secure with the four (4) previously removed screws. Install the ground washer at the locations shown in Figure 6.6.
5. Connect all previously removed wiring to the terminal block on the Converter as shown in Figure 6.5.
6. In the power system Distribution Cabinet, turn ON the circuit breaker that supplies DC input power to the Converter being replaced.
7. Refer to the separate instruction manual supplied with the DC-DC Converter for a startup procedure.
8. Ensure no alarms are active.

Proprietary and Confidential © 2026 Vertiv Group Corp.

**Figure 6.5: Rear View of List D2 and D3 DC-DC Converters**

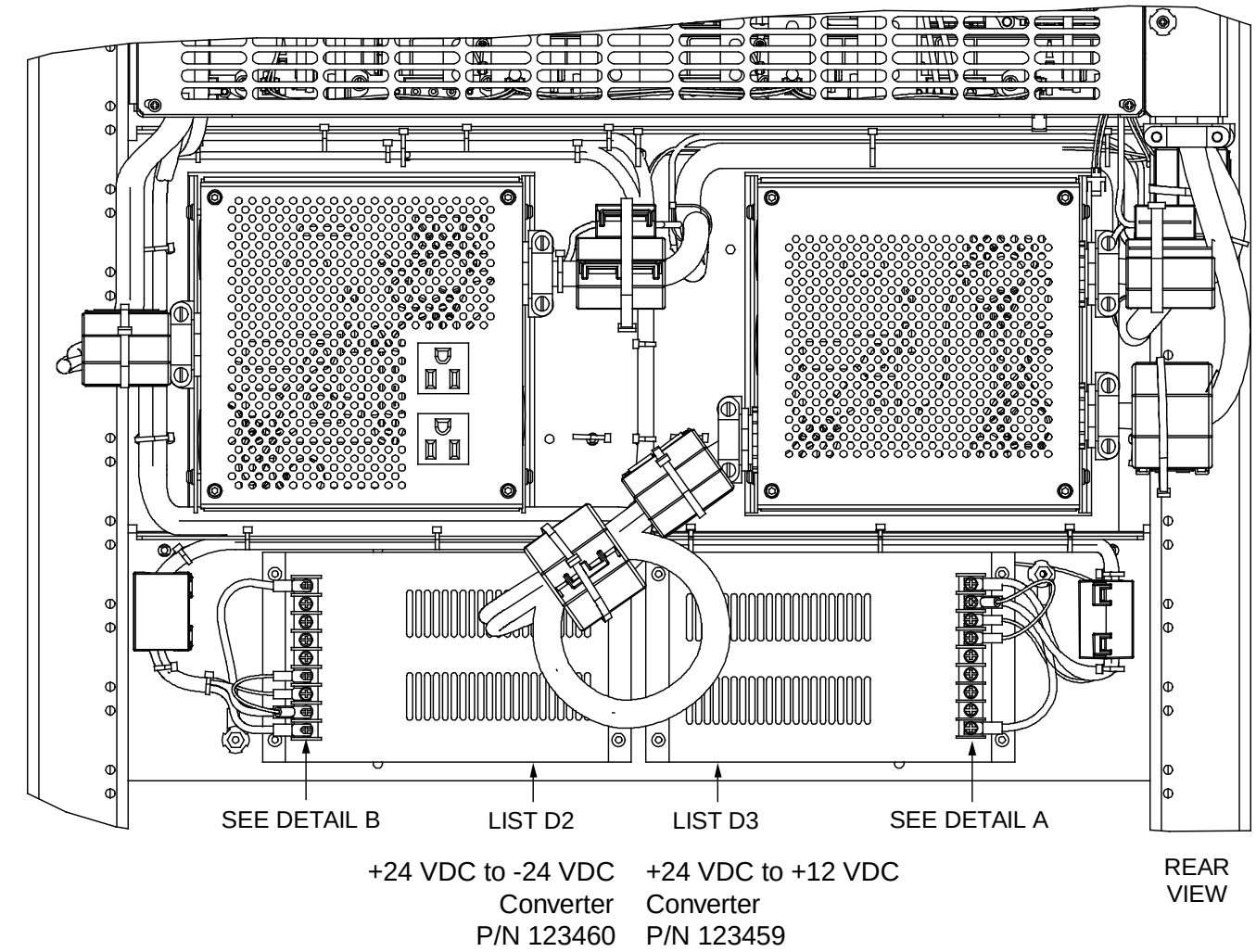


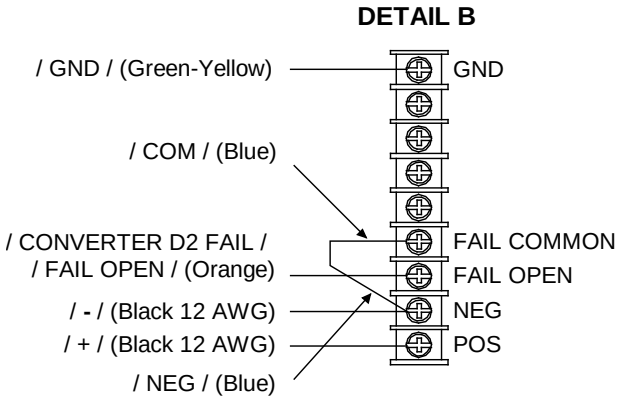


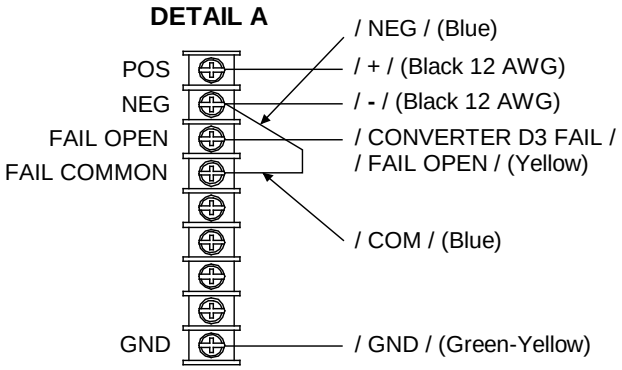


**NOTE**
Refer to the separate instruction manual furnished with the DC-DC Converters when connecting DC Output leads.


Proprietary and Confidential © 2026 Vertiv Group Corp.

**Figure 6.6: Front View of List D2 and D3 DC-DC Converters**

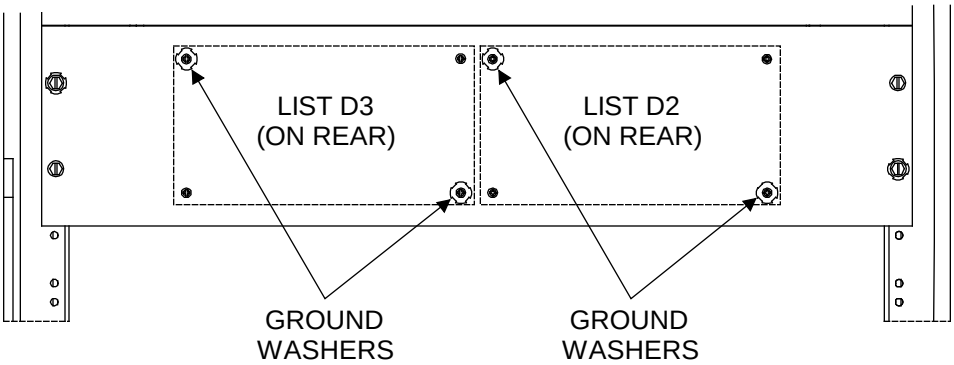


## 6.6.6 Replacing the Controller

Refer to the ACU+ Instructions (UM1M820BNA) or NCU Instructions (UM1M830BNA) for a controller replacement procedure.

## 6.6.7 Replacing a Distribution Device

### General

Replace distribution devices with the same type and rating. Refer to System Application Guide SAG581127000 for part numbers.

### Distribution Fuse "Alarm Fuse" Replacement

If a distribution fuse opens, the associated alarm fuse opens. Replace the distribution fuse before replacing the alarm fuse.

#### Procedure

1. An alarm fuse is removed by pulling it straight out of the fuseholder. If the alarm fuse is located in a modular fuse carrier, hold the fuse carrier in place with your thumb while pulling on the alarm fuse to prevent the entire carrier from inadvertently being pulled out.

2. Safety fuse covers are provided for all Bussmann GMT type fuses installed in the system. These covers snap onto the fuses and provide protection from exposed electrical terminations when a fuse opens. Insure that the safety fuse cover is installed after replacing a fuse. Refer to Figure 6.7 for installation details.

**Figure 6.7 Installation of Safety Fuse Covers**

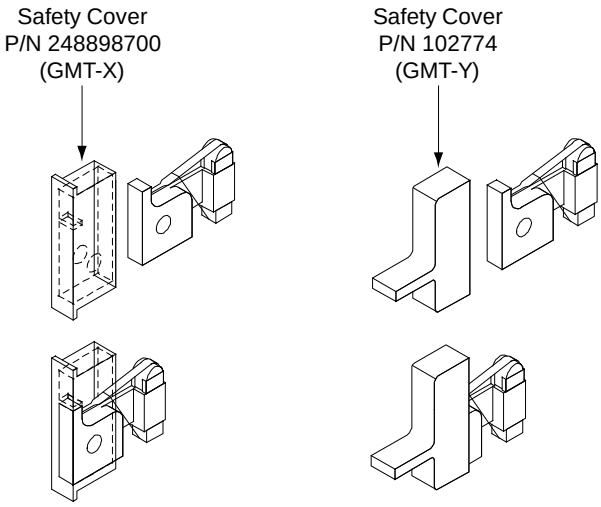

## Replacing a TPS/TLS Fuse

### Procedure

***NOTE!*** *Refer to Figure 6.8 as this procedure is performed.*

1. Open the distribution cabinet's front door by turning the latch in the counterclockwise position.
2. Remove the fuse carrier from the mounted fuseholder body by pulling it straight out.
3. Remove the open fuse from the fuse carrier and replace it with the same type and rating.
4. Replace the alarm fuse located in the front of the fuse carrier with the same type and rating. Ensure that a plastic safety cover is installed on the alarm fuse.
5. Push the fuse carrier securely back into the mounted fuseholder body. Note that a polarizing key on the bottom of the carrier prevents the carrier from being inserted upside down.
6. Verify no Fuse Alarms are active.
7. Close the distribution cabinet's front door. Turn the latch clockwise to secure the door.

## Replacing a Bullet Nose Fuseholder

### Procedure

***NOTE!*** *Refer to Figure 6.8 as this procedure is performed.*

1. Open the distribution cabinet's front door by turning the latch in the counterclockwise position.
2. Remove the fuse carrier from the mounted fuseholder body by pulling it straight out. Hold the fuseholder body while you pull the fuse carrier from the body.
3. Gently rock the defective fuseholder up and down while pulling firmly outward until the fuseholder is free from the distribution panel.
4. Orient the fuseholder as shown in Figure 6.8. Insert the terminals on the rear of the fuseholder into their corresponding sockets on the distribution panel. Ensure the alarm contact on the back of the fuseholder makes contact with the alarm terminal on the spring strip. Push fuseholder in firmly until fully seated in the distribution panel.
5. Push the fuse carrier securely back into the mounted fuseholder body. Note that a polarizing key on the bottom of the carrier prevents the carrier from being inserted upside down.
6. Verify no Fuse Alarms are active.
7. Close the distribution cabinet's front door. Turn the latch clockwise to secure the door.


Proprietary and Confidential © 2026 Vertiv Group Corp.

**Figure 6.8 Replacing a TPS/TLS Fuseholder and/or Fuse**

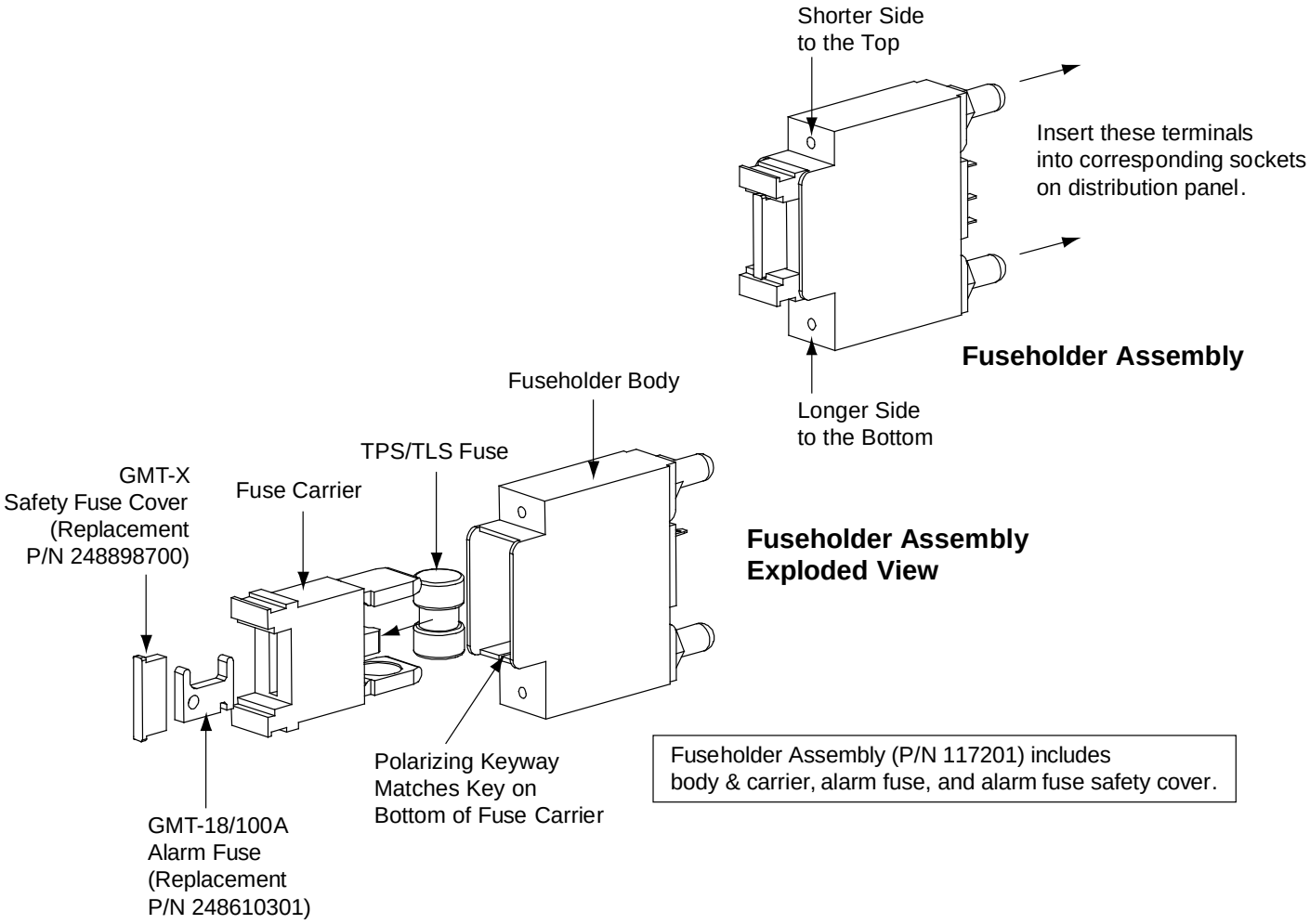

## Replacing a Bullet Nose Circuit Breaker

### Procedure

***NOTE!*** *Refer to Figure 6.9 as this procedure is performed.*

1. Open the distribution cabinet's front door by turning the latch in the counterclockwise position.
2. Operate the defective circuit breaker to the OFF position.
3. Gently rock the defective circuit breaker up and down while pulling firmly outward until the breaker is free from the distribution panel.
4. Ensure that the circuit breaker is in the OFF position, and is of the correct rating.
5. Orient the circuit breaker as shown in Figure 6.9. Insert the terminals on the rear of the circuit breaker into their corresponding sockets on the distribution panel. Ensure the alarm contact on the back of the circuit breaker makes contact with the alarm terminal on the spring strip. Push distribution device in firmly until fully seated in the distribution panel.
6. Operate the replacement circuit breaker to the ON position.
7. Verify no Circuit Breaker Alarms are active.
8. Close the distribution cabinet's front door. Turn the latch clockwise to secure the door.

**Figure 6.9 Replacing a Bullet Nose Circuit Breaker**

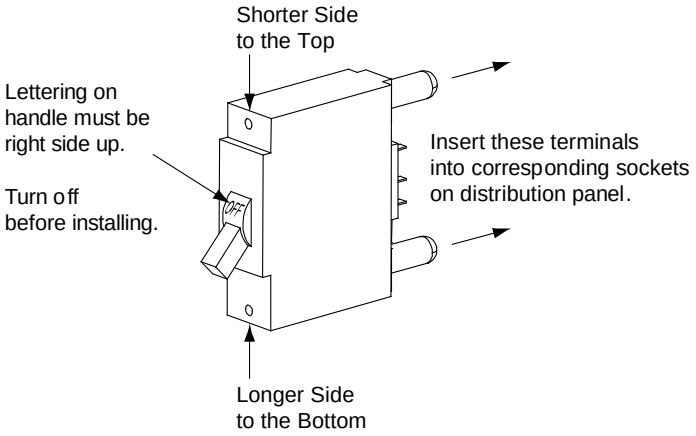



Proprietary and Confidential © 2026 Vertiv Group Corp.

## Replacing a TPH Fuse

### Procedure

***NOTE!*** *Refer to Figure 6.10 as this procedure is performed.*

1. Open the distribution cabinet's front door by turning the latch in the counterclockwise position.
2. Remove the fuse carrier from the mounted fuseholder body by grasping its handle and pulling straight out.
3. Remove the open fuse from the fuse carrier and replace it with the same type and rating.
4. Push the fuse carrier securely back into the mounted fuseholder body.
5. On the distribution panel, locate the open alarm fuse associated with the TPH fuse being replaced. Replace the alarm fuse with the same type and rating. Ensure that a plastic safety cover is installed on the alarm fuse.
6. Close the distribution cabinet's front door. Turn the latch clockwise to secure the door.

**Figure 6.10 Replacing a TPH Fuse**

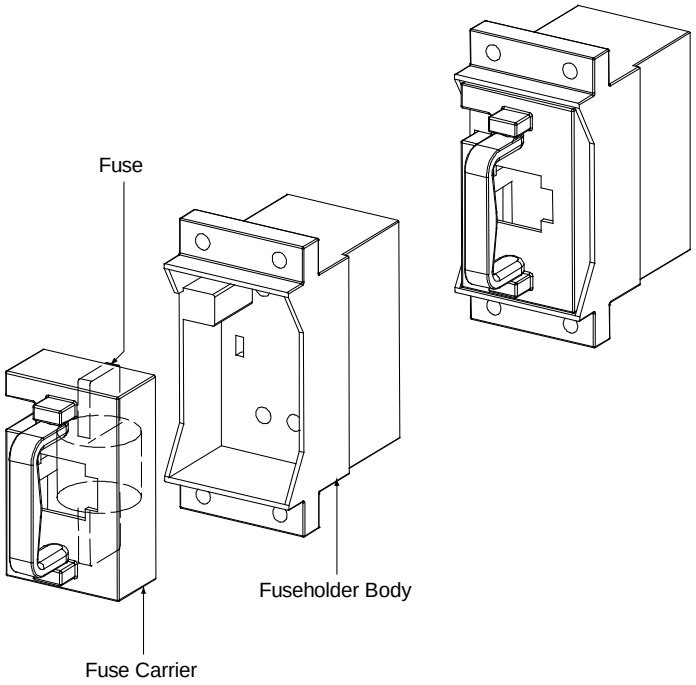

## Replacing a TPL-B Fuse

### Procedure

***NOTE!*** *Refer to Figure 6.11 as this procedure is performed.*

1. Open the distribution cabinet's front door by turning the latch in the counterclockwise position.
2. Remove the fuse case from the mounted fuse block by grasping its handle and pulling it straight out.
3. Open the fuse case.
4. Remove the open fuse from the fuse case and replace it with the same type and rating.
5. Close the fuse case.
6. Push the fuse case securely back into the mounted fuse block.
7. Replace the alarm fuse located in the front of the TPL-B fuse block. Replace only with a fuse of the same type and rating. Ensure that a plastic safety cover is installed on the alarm fuse.
8. Close the distribution cabinet's front door. Turn the latch clockwise to secure the door.

**Figure 6.11 Replacing a TPL-B Fuse**

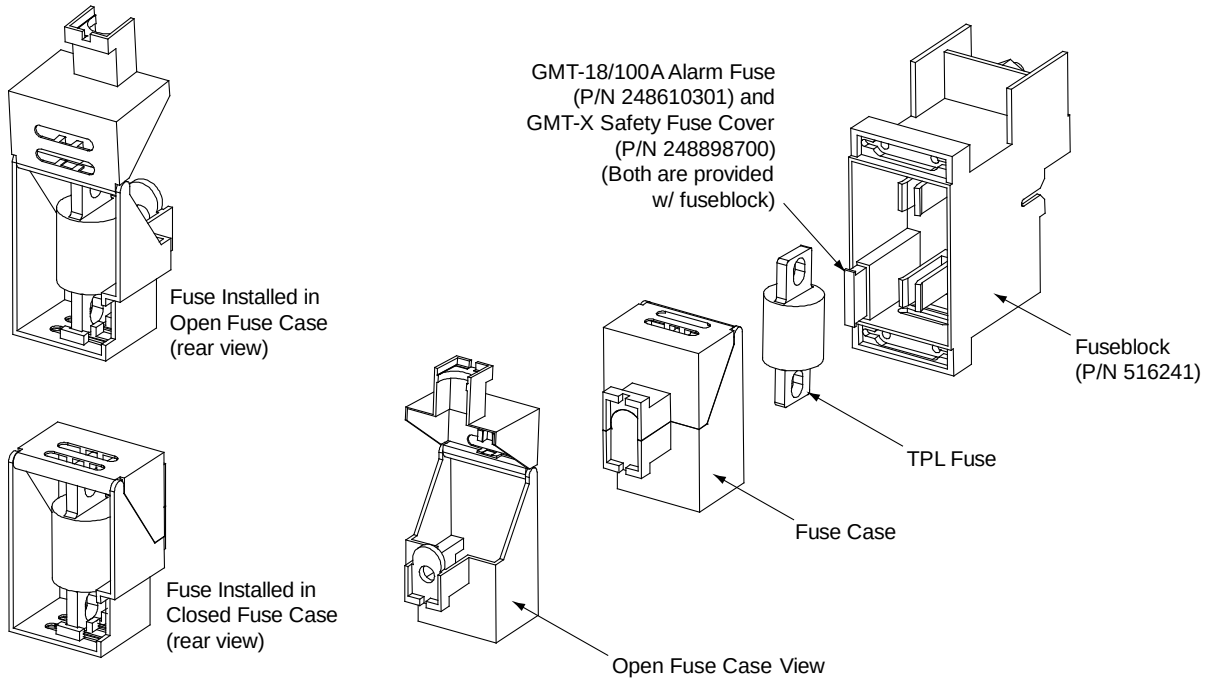



Proprietary and Confidential © 2026 Vertiv Group Corp.

## Replacing a GJ/218 Circuit Breaker

### Procedure

***NOTE!*** *Refer to Figure 6.12 as this procedure is performed.*

1. Open the distribution cabinet's front door by turning the latch in the counterclockwise position.
2. Operate the defective circuit breaker to the OFF position.

**DANGER!** The bolts being removed in the following step may be at system potential. Use insulated tools.

3. Remove the hardware securing the circuit breaker to the distribution panel and partially remove the circuit breaker.
4. Record each alarm wire located on the back of the circuit breaker (color and location on circuit breaker). Wiring diagrams are provided in Figure 6.12. Carefully disconnect the alarm wiring from the back of the circuit breaker, ensuring the exposed end does not contact any energized circuit.
5. Shunted Breakers Only: Record each shunt wire located on the back of the circuit breaker (color and location on circuit breaker). Wiring diagrams are provided in Figure 6.12. Carefully disconnect the shunt wiring from the back of the circuit breaker, ensuring the exposed end does not contact any energized circuit.
6. Ensure that the replacement circuit breaker is in the OFF position, and is of the correct rating and type (electrical trip/mechanical trip or electrical trip only). Orient the circuit breaker over its mounting location. Re-attach the alarm wiring and shunt wiring (if applicable) to the back of the circuit breaker as recorded above. Wiring diagrams are provided in Figure 6.12.

**DANGER!** The bolts being installed in the following step may be at system potential. Use insulated tools.

7. Install the replacement circuit breaker into its mounting position and secure with the hardware previously removed. Torque to 60 in-lbs.
8. Transfer the circuit breaker guard from the old circuit breaker to the new circuit breaker.
9. Operate the replacement circuit breaker to the ON position.
10. Verify no Circuit Breaker Alarms are active.
11. Close the distribution cabinet's front door. Turn the latch clockwise to secure the door.

**Figure 6.12 Replacing a GJ/218 Circuit Breaker (1-Pole) (Lists AC, AD, BC, BD) (cont'd on next page)**

INSTALLING CIRCUIT BREAKER

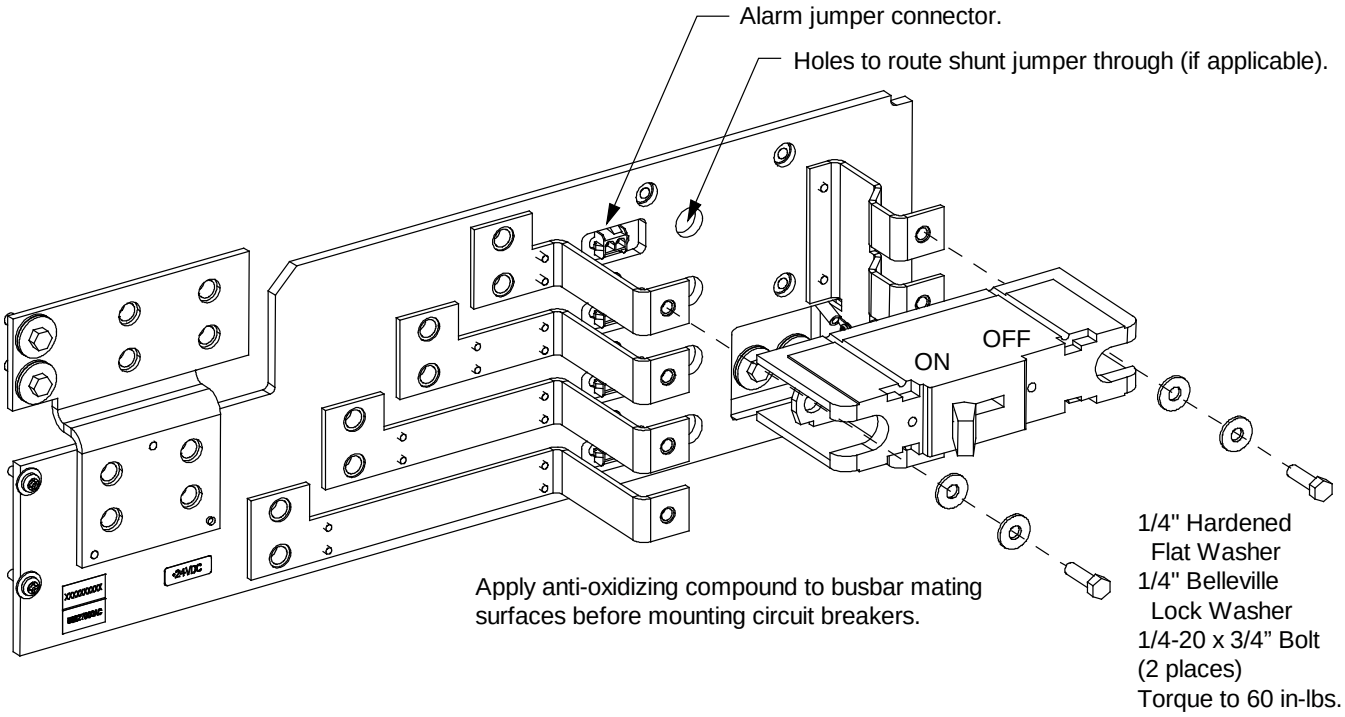


INSTALLING CIRCUIT BREAKER GUARD

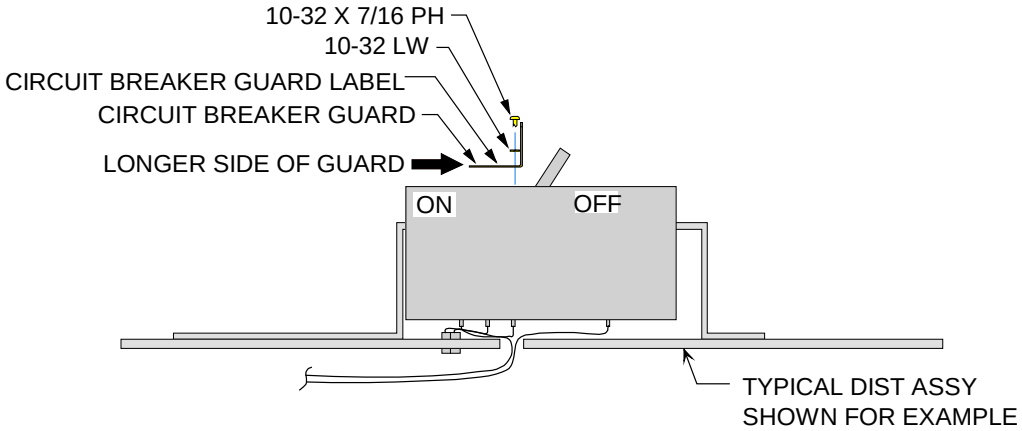


ALARM WIRING (BREAKERS W/OUT SHUNTS)

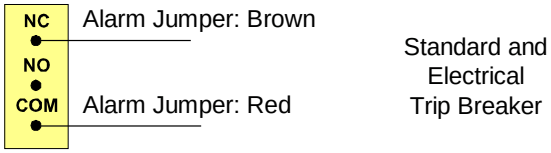


ALARM WIRING (BREAKERS WITH SHUNTS)

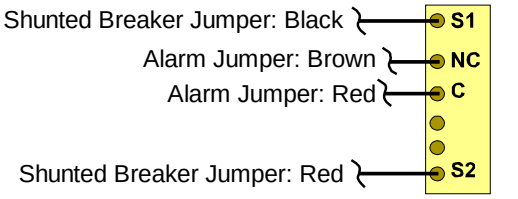



Proprietary and Confidential © 2026 Vertiv Group Corp.

**Figure 6.12 Replacing a GJ/218 Circuit Breaker (2-Pole, 3-Pole, 4-Pole) (Lists AC, AD, BC, BD) (cont'd from previous page, cont'd on next page)**

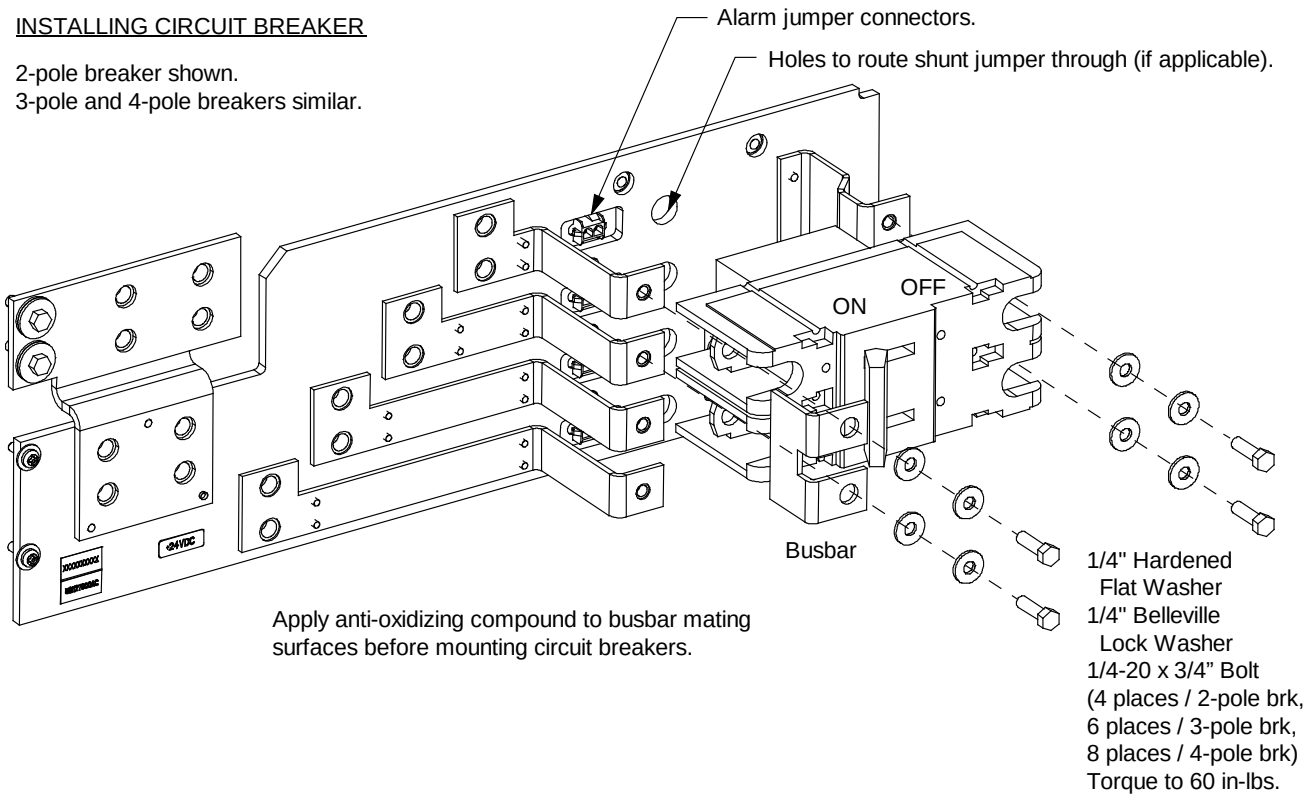


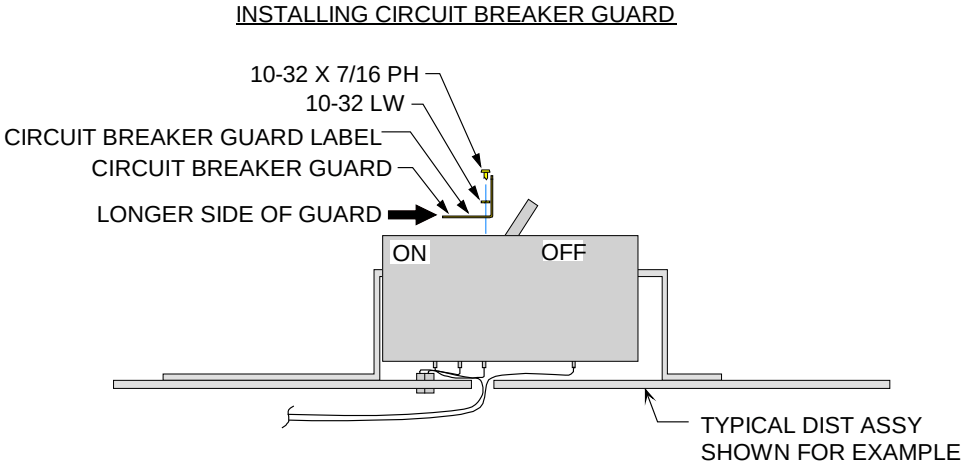


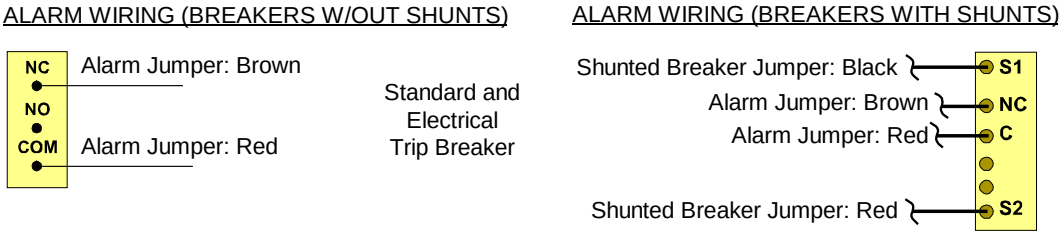

**Figure 6.12 Replacing a GJ/218 Circuit Breaker (1-Pole, 2-Pole, 3-Pole, 4-Pole) (List AM and List AP) (cont'd from previous page)**

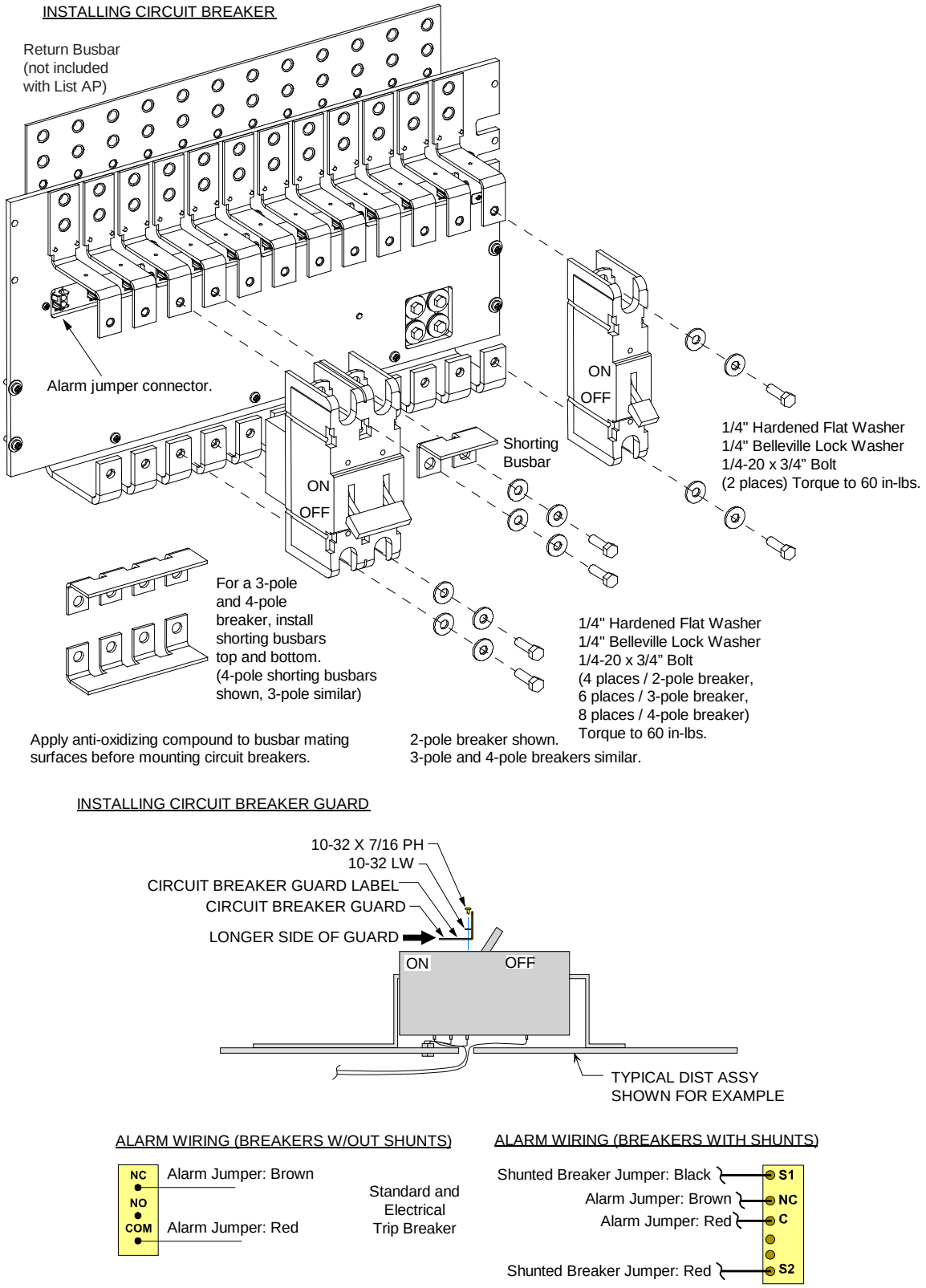



Proprietary and Confidential © 2026 Vertiv Group Corp.

### 6.6.8 Replacing a Distribution Panel (List AA, AB, AC, AD, AE, AF, AG, AH, AJ, AK, DA, DB, DC, DD, BA, BB, BC, BD, BE, BF, BG, BH, AM, and AP)

**DANGER!** Performing the next steps exposes service personnel to battery potential. Exercise extreme caution not to inadvertently contact or have any tool inadvertently contact any energized electrical termination.

#### Procedure

***NOTE!*** *List AC shown in illustration, other Lists similar.*

***NOTE!*** *Refer to Figure 6.13 as this procedure is performed.*

**Removing the Distribution Panel**

1. Open the distribution cabinet's front door by turning the latch in the counterclockwise position.
2. Remove the plastic shield covering the circuit breakers or fuseholders on the panel to be removed by loosening the screws holding the shield and sliding the shield upwards.
3. Disconnect all load or battery wiring from the circuit breaker or fuse positions.
4. On panels equipped with a ground busbar, remove all load return or battery return wiring from the ground busbar.
5. On panels equipped with shunts, label the shunt leads then remove them from the panel.
6. Locate the in-line FA/CBA connector located near the back of the panel, and separate the connector halves.
7. Refer to Figure 6.13 and remove the hardware securing the panel's Ground Busbar (if equipped) to the distribution cabinet's busbar.
8. For load distribution panels, refer to Figure 6.13 and remove the hardware securing the panel's System Load Distribution busbar to the distribution cabinet's busbar.
9. For battery distribution panels, refer to Figure 6.13 and remove the hardware securing the panel's Battery Busbar to the distribution cabinet's busbar.
10. For dual voltage load distribution panels, refer to Figure 6.13 and remove the hardware securing the -48V jumper leads.
11. Refer to Figure 6.13 and remove the hardware securing the distribution panel to the distribution cabinet. Remove the panel from the distribution cabinet.

**Installing the Distribution Panel**

***NOTE!*** *In the following procedure, before making busbar-to-busbar connections, apply a thin coating of electrical anti-oxidizing compound to the mating surfaces of the busbars.*

1. Orient the replacement distribution panel into distribution cabinet, checking to ensure no wires are pinched. Replace the hardware securing the distribution panel to the distribution cabinet (10-32 x 5/8" bolt, #10 flat washer, 4-places).
2. For dual voltage load distribution panels, replace the hardware securing the -48V jumper leads (1/4-20 bolt, 1/4" lock washer, 1/4" flat washer. Torque to 84 in-lbs).
3. For battery distribution panels, replace the hardware securing the panel's Battery Busbar to the distribution cabinet's busbar (3/8-16 x 1-1/4" bolt, 3/8" Belleville lock washer, 3/8" hardened flat washer, 2-places. Torque to 180 in-lbs.)

4. **For load distribution panels,** replace the hardware securing the panel's System Load Distribution busbar to the distribution cabinet's busbar (1/4-20 x 1" bolt, 1/4" Belleville lock washer, 1/4" Belleville lock washer (concave side of Belleville lock washers face each other), 1/4" hardened flat washer, 2-places. Torque to 60 in-lbs).
5. Replace the hardware securing the panel's Ground Busbar (if equipped) to the distribution cabinet's busbar (1/4-20 x 1" bolt, 1/4" Belleville lock washer, 1/4" Belleville lock washer (concave side of Belleville lock washers face each other), 1/4" hardened flat washer, 2-places. Torque to 60 in-lbs).
6. Locate the in-line FA/CBA connector located near the back of the panel, and plug it into the mating connector half in the distribution cabinet.
7. On panels equipped with shunts, reconnect the shunt leads.

**WARNING!** In the next step, observe correct polarity; otherwise equipment damage will result.

8. On panels equipped with a ground busbar, reconnect the load return or battery return wiring to the ground busbar.
9. Reconnect the load or battery wiring to the circuit breaker or fuse positions.
10. Transfer the plug-in circuit breakers or fuses from the old panel to the replacement panel.
11. Replace the plastic shield covering the circuit breakers or fuseholders on the replacement panel.
12. Verify no Circuit Breaker/Fuse Alarms are active.
13. Close the distribution cabinet's front door. Turn the latch clockwise to secure the door.


Proprietary and Confidential © 2026 Vertiv Group Corp.

**Figure 6.13 Replacing a Distribution Panel (List AA, AB, AC, AD, AE, AF, AG, AH, AJ, AK, DA, DB, DC, DD, BA, BB, BC, BD, BE, BF, BG, BH, AM, and AP)**

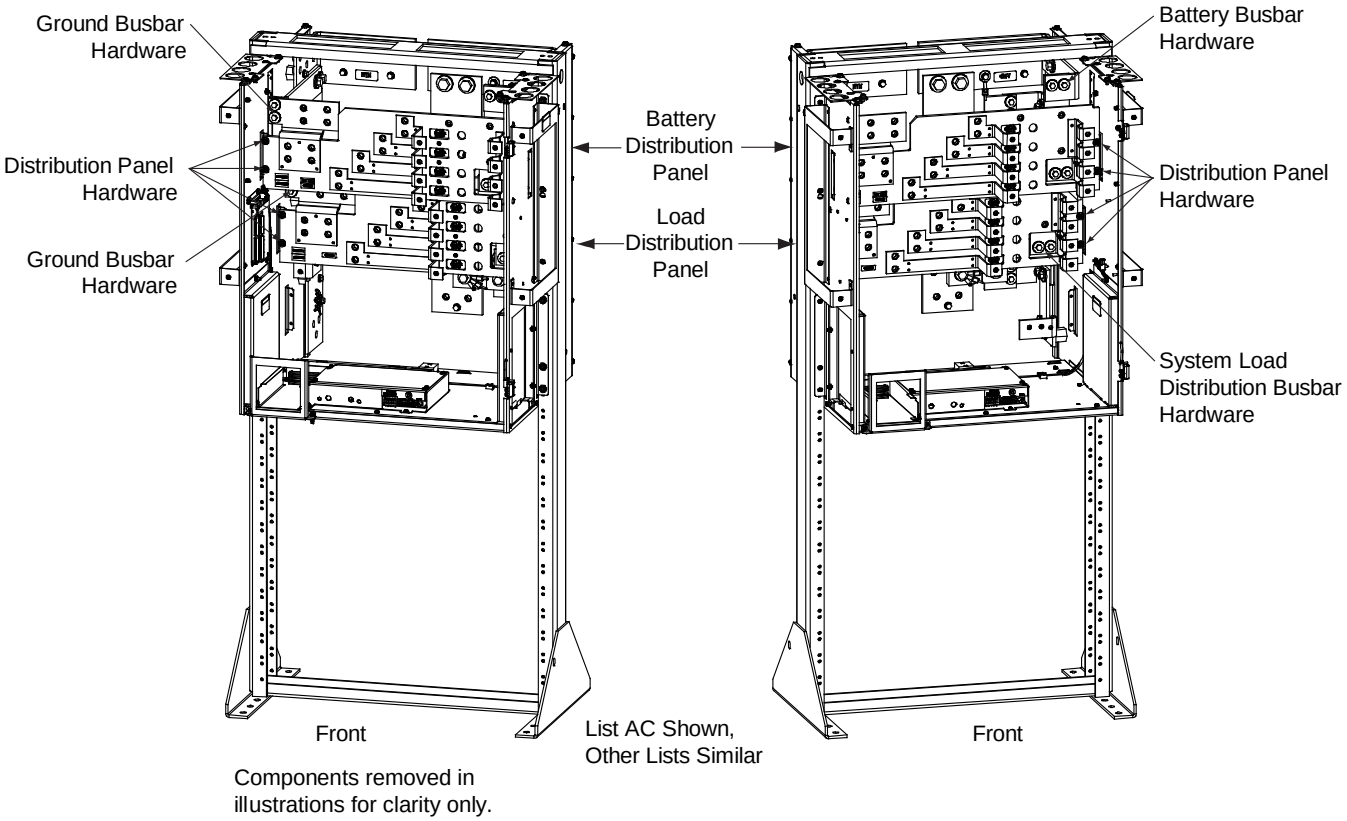


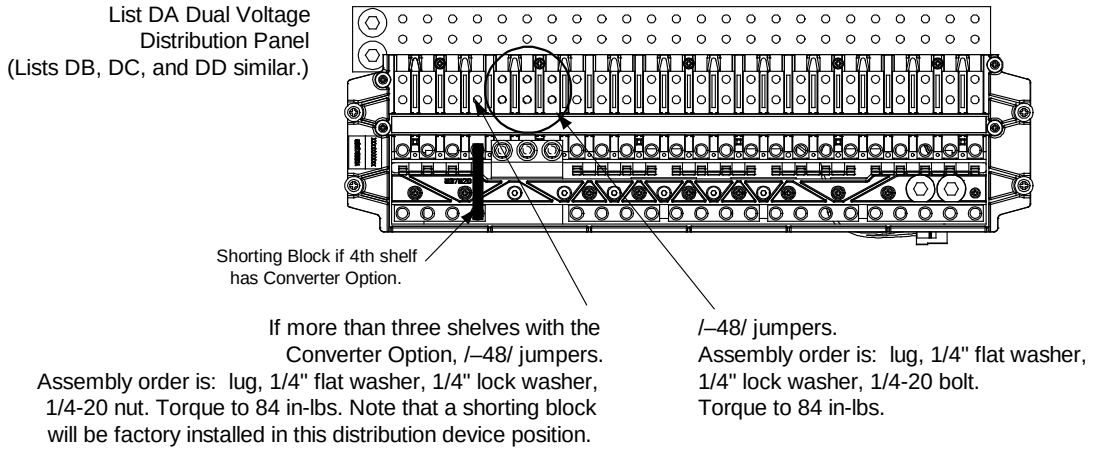

## 6.6.9 Replacing a Distribution Panel (List AL, AN, DE, DF, DG, DH, DJ, and DK)

**DANGER!** Performing the next steps exposes service personnel to battery potential. Exercise extreme caution not to inadvertently contact or have any tool inadvertently contact any energized electrical termination.

### Procedure

***NOTE!*** *Refer to Figure 6.14 as this procedure is performed.*

#### Removing the Distribution Panel

1. Open the distribution cabinet's front door by turning the latch in the counterclockwise position.
2. Remove the plastic shield covering the circuit breakers or fuseholders on the panel to be removed by loosening the screws holding the shield and sliding the shield upwards.
3. Disconnect all load wiring from the circuit breaker or fuse positions.
4. Remove all load return wiring from the ground busbar (if present).
5. Locate the in-line FA/CBA connector located near the back of the panel, and separate the connector halves.
6. Refer to Figure 6.14 and remove the hardware securing the panel's ground busbar (if present) to the distribution cabinet's busbar.
7. Refer to Figure 6.14 and remove the hardware securing the panel's system load distribution busbar to the distribution cabinet's busbar.
8. For dual voltage load distribution panels, refer to Figure 6.14 and remove the hardware securing the -48V jumper leads.
9. Refer to Figure 6.14 and remove the hardware securing the distribution panel to the distribution cabinet. Remove the panel from the distribution cabinet.

#### Installing the Distribution Panel

***NOTE!*** *In the following procedure, before making busbar-to-busbar connections, apply a thin coating of electrical anti-oxidizing compound to the mating surfaces of the busbars.*

1. Orient the replacement distribution panel into distribution cabinet, checking to ensure no wires are pinched. Replace the hardware securing the distribution panel to the distribution cabinet. Torque per Figure 6.14.
2. For dual voltage load distribution panels, replace the hardware securing the -48V jumper leads. Torque per Figure 6.14.
3. Replace the hardware securing the panel's system load distribution busbar to the distribution cabinet's busbar. Torque per Figure 6.14.
4. Replace the hardware securing the panel's ground busbar (if present) to the distribution cabinet's busbar. Torque per Figure 6.14.
5. Locate the in-line FA/CBA connector located near the back of the panel, and plug it into the mating connector half in the distribution cabinet.
6. On panels equipped with shunts, reconnect the shunt leads.

**WARNING!** In the next step, observe correct polarity; otherwise equipment damage will result.


Proprietary and Confidential © 2026 Vertiv Group Corp.

7. Reconnect the load return wiring to the ground busbar (if present).
8. Reconnect the load wiring to the circuit breaker or fuse positions.
9. Transfer the plug-in circuit breakers or fuses from the old panel to the replacement panel.
10. Replace the plastic shield covering the circuit breakers or fuseholders on the replacement panel.
11. Verify no circuit breaker/fuse alarms are active.
12. Close the distribution cabinet's front door.  Turn the latch clockwise to secure the door.

Proprietary and Confidential © 2026 Vertiv Group Corp.

**Figure 6.14 Replacing a Distribution Panel (List AL, AN, DE, DF, DG, DH, DJ, and DK)**

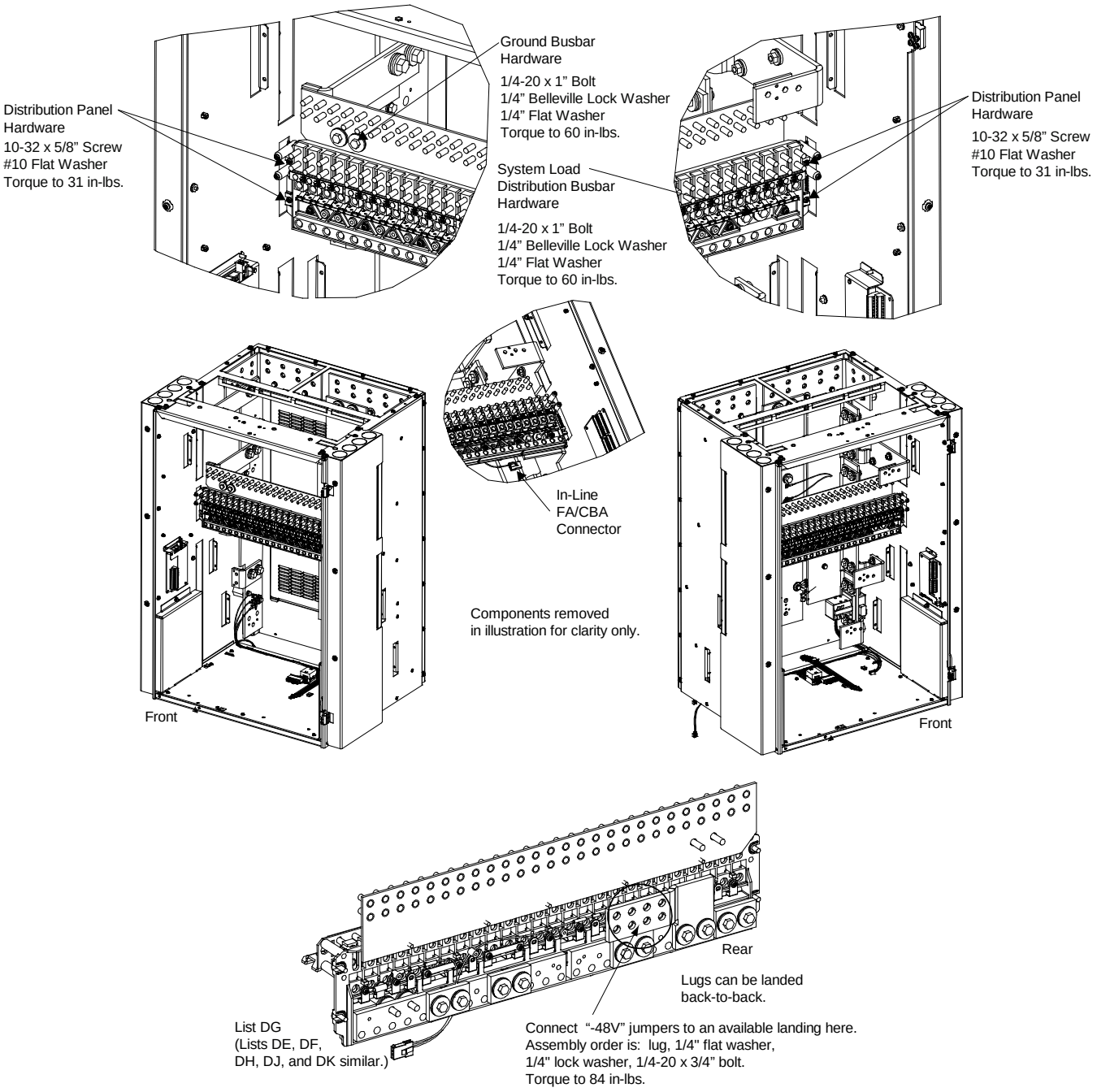



Proprietary and Confidential © 2026 Vertiv Group Corp.

### 6.6.10 Replacing a Distribution Panel List AA, AB, AC, AD, AE, AF, AG, AH, AJ, AK, DA, DB, DC, DD, BA, BB, BC, BD, BE, BF, BG, or BH with a List AL, AN, DE, DF, DG, DH, DJ, or DK

**DANGER!** Performing the next steps exposes service personnel to battery potential. Exercise extreme caution not to inadvertently contact or have any tool inadvertently contact any energized electrical termination.

## Procedure

**Removing the Existing Distribution Panel**

***NOTE!*** *Refer to Figure 6.15.*

1. Open the distribution cabinet's front door by turning the latch in the counterclockwise position.
2. Remove the plastic shield covering the circuit breakers or fuseholders on the panel to be removed by loosening the screws holding the shield and sliding the shield upwards.
3. Disconnect all load or battery wiring from the circuit breaker or fuse positions.
4. On panels equipped with a ground busbar, remove all load return or battery return wiring from the ground busbar.
5. On panels equipped with shunts, label the shunt leads then remove them from the panel.
6. Locate the in-line FA/CBA connector located near the back of the panel, and separate the connector halves.
7. Refer to Figure 6.15 and remove the hardware securing the panel's Ground Busbar (if equipped) to the distribution cabinet's busbar.
8. For load distribution panels, refer to Figure 6.15 and remove the hardware securing the panel's System Load Distribution busbar to the distribution cabinet's busbar.
9. For battery distribution panels, refer to Figure 6.15 and remove the hardware securing the panel's Battery Busbar to the distribution cabinet's busbar.
10. For dual voltage load distribution panels, refer to Figure 6.15 and remove the hardware securing the -48V jumper leads.
11. Refer to Figure 6.15 and remove the hardware securing the distribution panel to the distribution cabinet. Remove the panel from the distribution cabinet.

**Replacing the Busbar**

***NOTE!*** *Refer to Figure 6.16.*

***NOTE!*** *In the following procedure, before making busbar-to-busbar connections, apply a thin coating of electrical anti-oxidizing compound to the mating surfaces of the busbars.*

1. Perform the procedure in Figure 6.16.

**Installing the New Distribution Panel**

***NOTE!*** *Refer to Figure 6.17.*

***NOTE!*** *In the following procedure, before making busbar-to-busbar connections, apply a thin coating of electrical anti-oxidizing compound to the mating surfaces of the busbars.*

1. Remove the plastic shield covering the circuit breakers or fuseholders on the replacement panel by loosening the screws holding the shield and sliding the shield upwards.
2. For dual voltage load distribution panels, orient the replacement distribution panel into distribution cabinet. Secure the -48V jumper leads to the rear of the panel as shown in Figure 6.17. Torque per Figure 6.17.
3. Secure the replacement distribution panel to the distribution cabinet, ensuring no wires are pinched. Torque per Figure 6.17.
4. Replace the hardware securing the panel's System Load Distribution busbar to the distribution cabinet's busbar. Torque per Figure 6.17.
5. Replace the hardware securing the panel's Ground Busbar to the distribution cabinet's busbar. Torque per Figure 6.17.
6. Locate the in-line FA/CBA connector located near the back of the panel, and plug it into the mating connector half in the distribution cabinet.

**WARNING!** In the next step, observe correct polarity; otherwise equipment damage will result.

7. Refer to IM581127000 and connect load leads to the replacement panel.
8. Ensure appropriately sized circuit breakers or fuses are installed in the replacement panel.
9. Replace the plastic shield covering the circuit breakers or fuseholders on the replacement panel.
10. Verify no Circuit Breaker/Fuse Alarms are active.
11. Close the distribution cabinet's front door. Turn the latch clockwise to secure the door.


Proprietary and Confidential © 2026 Vertiv Group Corp.

**Figure 6.15 Removing the Existing Distribution Panel**

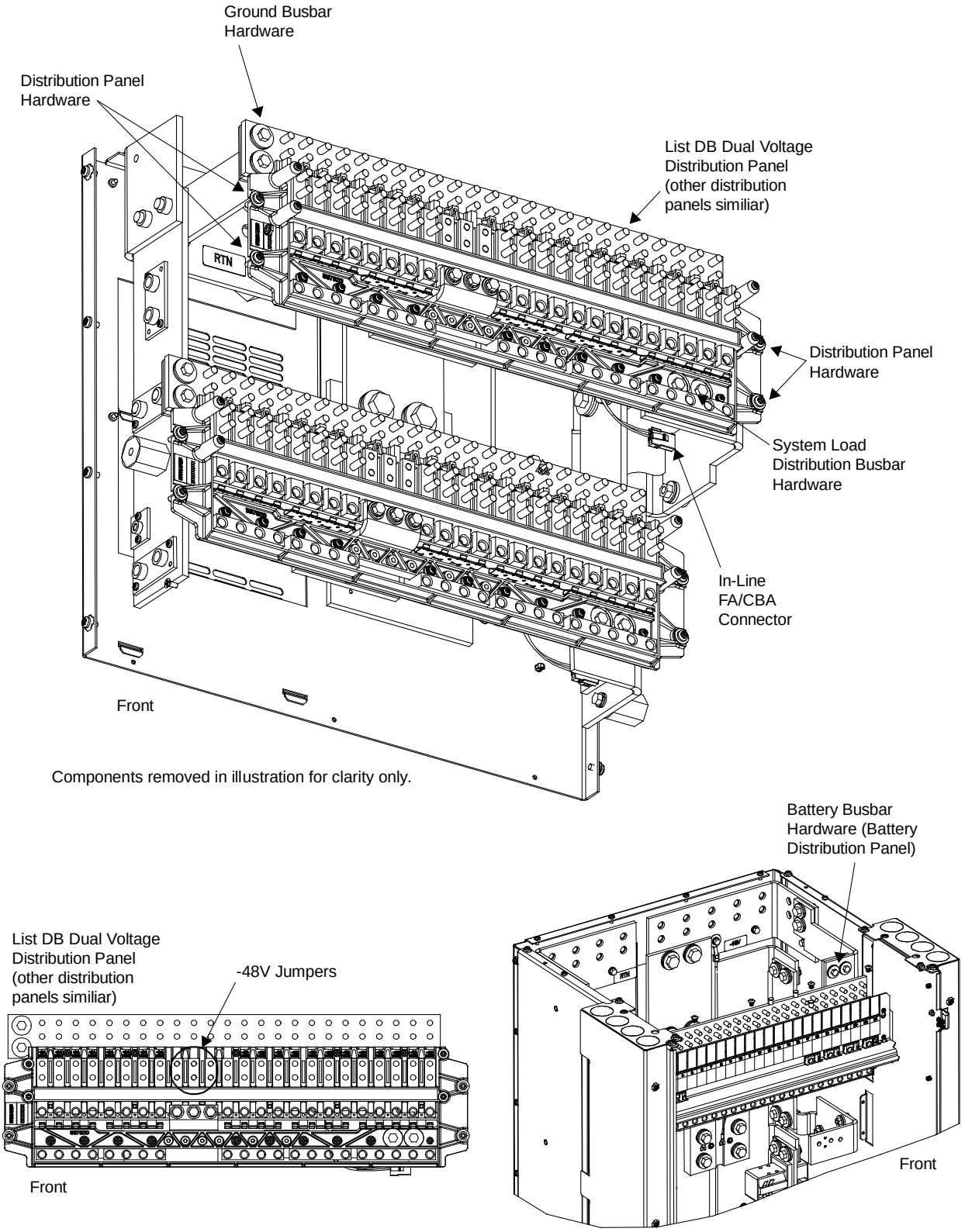

**Figure 6.16 Replacing the Busbar**

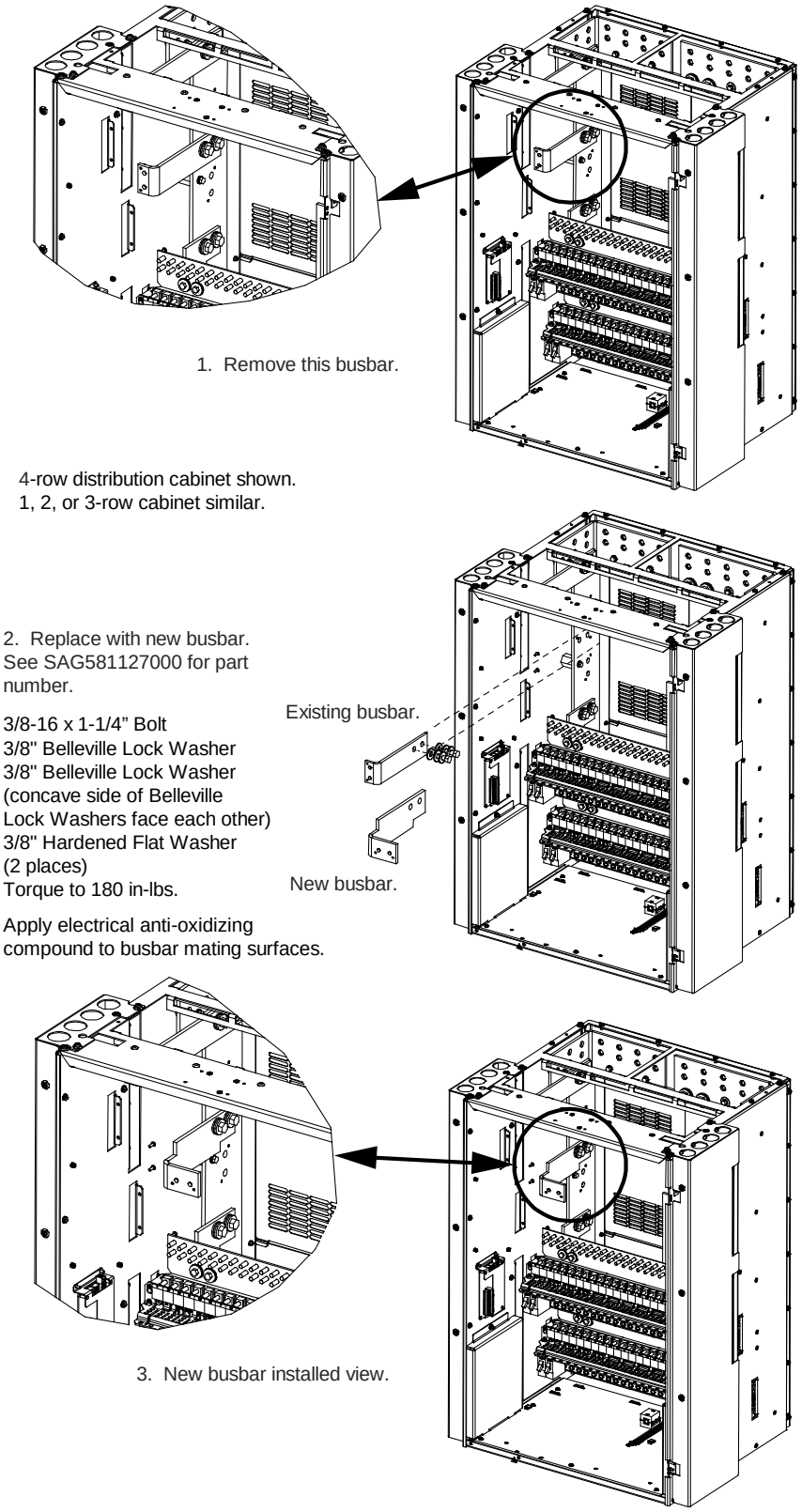



Proprietary and Confidential © 2026 Vertiv Group Corp.

**Figure 6.17 Installing the New Distribution Panel**

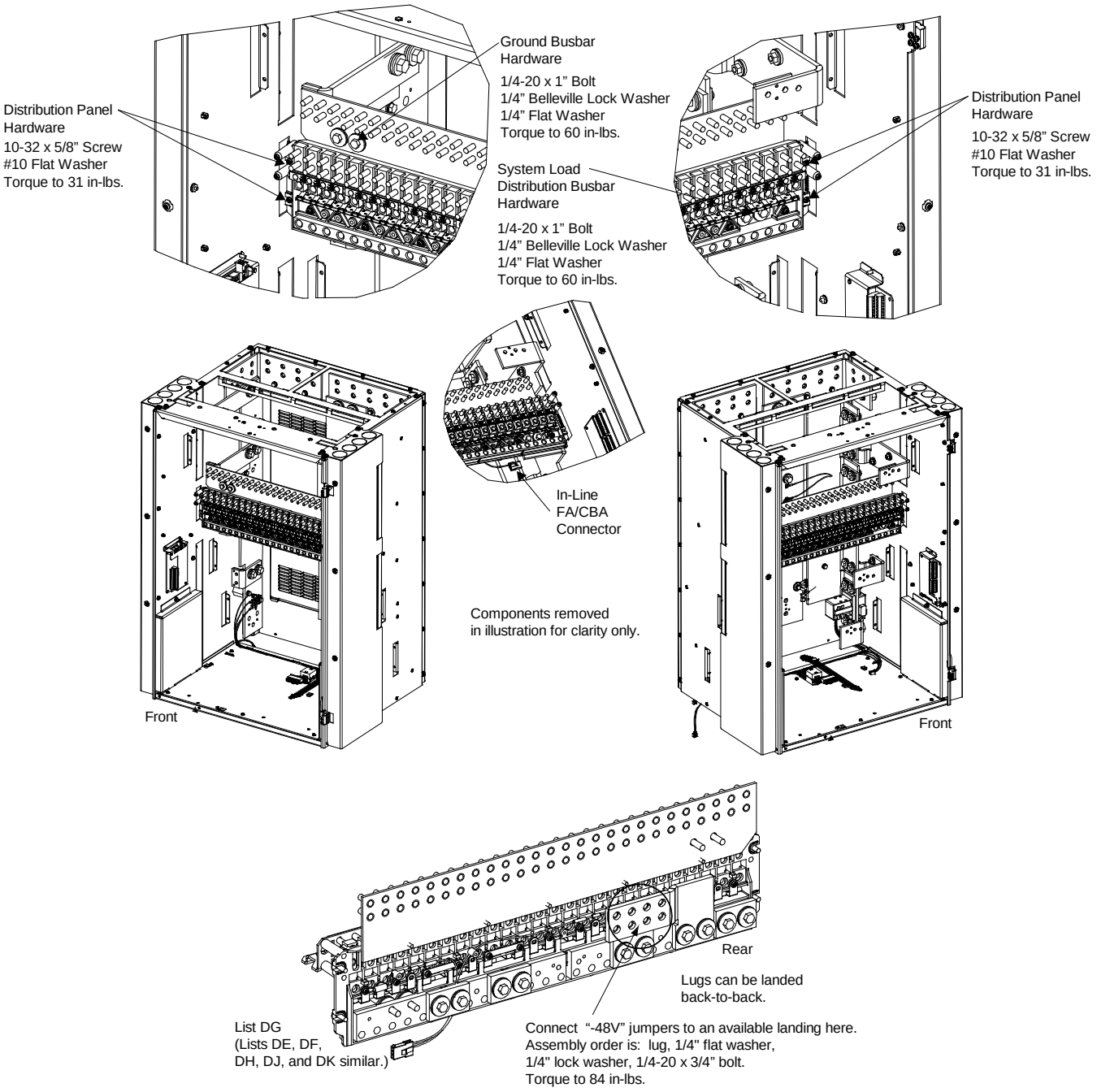

## 6.6.11 Circuit Card Replacement Procedures

**WARNING!** Circuit cards used in this power system contain static-sensitive devices. Read the Static Warning at the front of this document before performing any of the following procedures.

### General

The following circuit card replacement procedures can be performed with the system operating.

Refer to Figure 4.1 for circuit card locations.

**CAUTION!** When performing any step in these procedures that requires removal or installation of hardware, use caution to ensure no hardware is dropped and left inside the cabinet; otherwise service interruption or equipment damage may occur.

***NOTE!*** *When performing any step in these procedures that requires removal of existing hardware, retain all hardware for use in subsequent steps.*

### System Interface Circuit Card Replacement

#### Procedure

1. Performing this procedure may activate external alarms. Do one of the following. If possible, disable these alarms. If these alarms cannot be easily disabled, notify the appropriate personnel to disregard any future alarms associated with this system while the procedure is being performed.

**DANGER!** Performing the next steps exposes service personnel to battery potential. Exercise extreme caution not to inadvertently contact or have any tool inadvertently contact any energized electrical termination.

2. Open the distribution cabinet's front door by turning the latch in the counterclockwise position.

**WARNING!** Damage to the circuit card may result if the next step is not followed.

3. Connect an approved grounding strap to your wrist. Attach the other end to a suitable ground.
4. Remove the top and front panels to access the circuit cards at the bottom of the distribution cabinet.
5. Carefully label any wires connected to the customer connection terminal block on the circuit card. These wires must be connected to the same terminals on the replacement circuit card. Refer to Figure 6.18.
6. Carefully label the connectors plugged into the circuit card. These connectors must be plugged into the same connectors on the replacement circuit card. Refer to Figure 6.18.

**DANGER!** In the next step, external wiring may be energized from an external source. DO NOT allow bare wire ends to contact any grounded or energized object.

7. Remove the external wiring from the customer connection terminal block. DO NOT allow the bare wire end to contact any grounded or energized object. Isolate the wire end with electrical tape. Repeat for each wire to be removed.
8. Unplug all connectors plugged into the circuit card.
9. Remove the screws securing the circuit card and remove the circuit card from the distribution cabinet.
10. In this step, ensure you do not intermix the old and replacement circuit cards. Set the shorting jumpers on the replacement circuit card to match the locations on the old circuit card. Jumper settings are documented in the "Setting Jumpers and Switch Options" section of the Power System Installation Instructions (IM581127000).


Proprietary and Confidential © 2026 Vertiv Group Corp.

11. Slide the replacement circuit card into the mounting position inside the distribution cabinet, and secure with the screws removed from the old circuit card.
12. Plug all connectors removed from the old circuit card into the same position on the replacement circuit card.

**DANGER!** In the next step, external alarm wiring may be energized from an external source. DO NOT allow bare wire ends to contact any grounded or energized object.

13. Reconnect the external wiring to the correct terminals on the customer connection terminal block. First remove the electrical tape that was applied to the bare wire end in a previous step. DO NOT allow the bare wire end to contact any grounded or energized object. After securing the wire, gently tug on the wire to ensure that it cannot be pulled out of the terminal block. Repeat for each wire to be reconnected.
14. Remove the grounding wrist strap.
15. Reinstall the top and front panels that cover the circuit cards at the bottom of the distribution cabinet.
16. Close the distribution cabinet's front door. Turn the latch clockwise to secure the door.
17. Enable the external alarms, or notify appropriate personnel that this procedure is finished.
18. Ensure that there are no local or remote alarms active on the system.

Proprietary and Confidential © 2026 Vertiv Group Corp.

**Figure 6.18 System Interface Circuit Card Connector Locations**

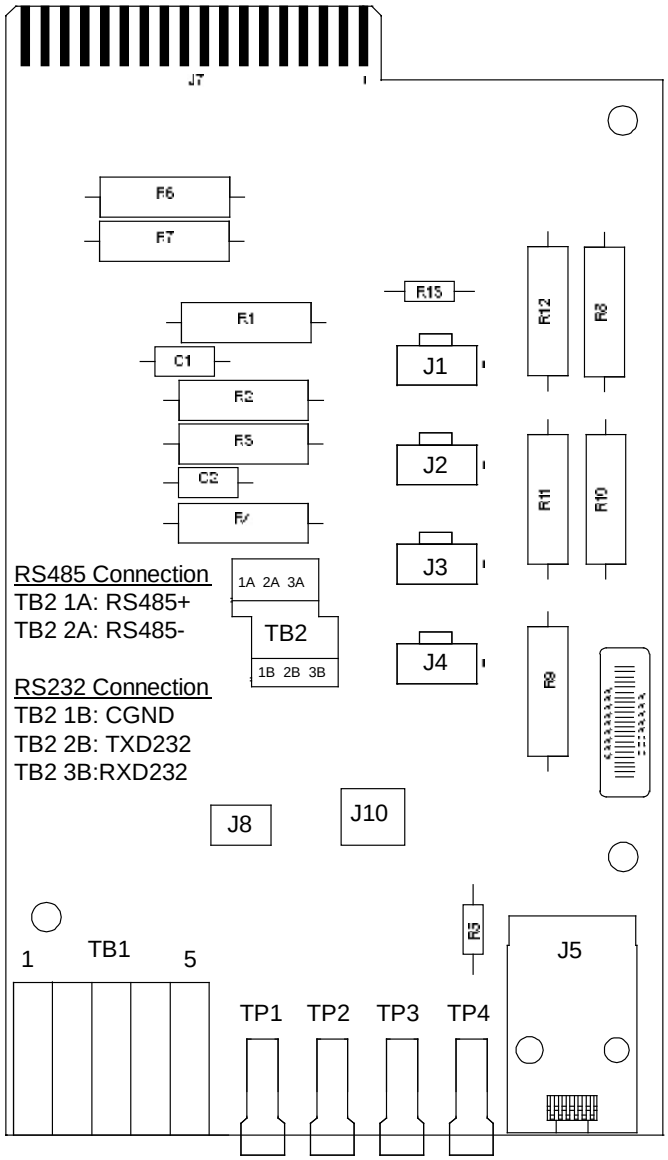


J1, J2, J3, J4
Distribution Panels FA Inputs

J8
Selects to power Controller from “Battery Power” or not.

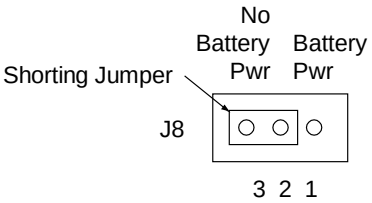


J10
Battery Monitoring External / Internal (see TB1-4 and TB1-5 for external monitoring points)

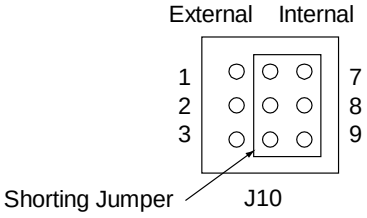


J5
CAN

TB1-1: Battery Tray FA
TB1-2: External Battery FA
TB1-3: External System FA
TB1-4: External Battery Monitoring (-)
TB1-5: External Battery Monitoring (+)

TP1 (+) and TP2 (-)
System Voltage Monitoring

TP3 (+) and TP4 (-)
System Load Shunt Monitoring

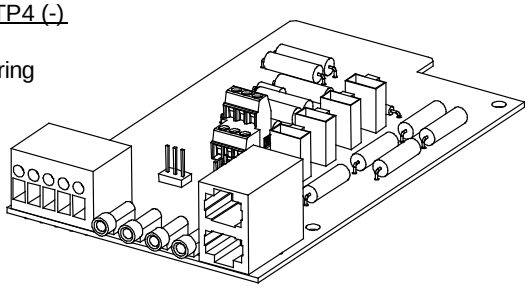

TB1
Wire Size Capacity: 22-12 AWG.
Recommended Torque: 3.0 in-lbs.
FA Signals: Battery applied to the terminal turns in an alarm.


Proprietary and Confidential © 2026 Vertiv Group Corp.

## IB2 (Controller Interface Board) and Optional EIB (Controller Extended Interface Board) Replacement

### Procedure

1. Performing this procedure may activate external alarms. Do one of the following. If possible, disable these alarms. If these alarms cannot be easily disabled, notify the appropriate personnel to disregard any future alarms associated with this system while the procedure is being performed.

**DANGER!** Performing the next steps exposes service personnel to battery potential. Exercise extreme caution not to inadvertently contact or have any tool inadvertently contact any energized electrical termination.

2. Open the distribution cabinet's front door by turning the latch in the counterclockwise position.

**WARNING!** Damage to the circuit card may result if the next step is not followed.

3. Connect an approved grounding strap to your wrist. Attach the other end to a suitable ground.
4. Carefully label the wires connected to the customer connection terminal blocks on the circuit card. These wires must be connected to the same terminals on the replacement circuit card. Refer to Figure 6.19 or Figure 6.20.
5. Carefully label the connectors plugged into the circuit card. These connectors must be plugged into the same connectors on the replacement circuit card. Refer to Figure 6.19 or Figure 6.20.

**DANGER!** In the next step, external alarm wiring may be energized from an external source. DO NOT allow bare wire ends to contact any grounded or energized object.

6. Remove the external wiring from the customer connection terminal blocks. DO NOT allow the bare wire end to contact any grounded or energized object. Isolate the wire end with electrical tape. Repeat for each wire to be removed.
7. Unplug all connectors plugged into the circuit card.
8. Remove the circuit card by removing the bracket the circuit card is mounted to. Remove the circuit card from the bracket.
9. In this step, ensure you do not intermix the old and replacement circuit cards. Set the switch on the replacement circuit card to the same setting as the old circuit card. Switch settings are documented in the "Setting Jumpers and Switch Options" section of the Power System Installation Instructions (IM581127000).
10. Secure the replacement circuit card to the bracket and re-install the circuit card and bracket into the distribution cabinet.
11. Plug all connectors removed from the old circuit card into the same position on the replacement circuit card.

**DANGER!** In the next step, external alarm wiring may be energized from an external source. DO NOT allow bare wire ends to contact any grounded or energized object.

12. Reconnect the external wiring to the correct terminals on the customer connection terminal block. First remove the electrical tape that was applied to the bare wire end in a previous step. DO NOT allow the bare wire end to contact any grounded or energized object. After securing the wire, gently tug on the wire to ensure that it cannot be pulled out of the terminal block. Repeat for each wire to be reconnected.
13. Remove the grounding wrist strap.
14. Close the distribution cabinet's front door. Turn the latch clockwise to secure the door.
15. Reboot the controller.
    **Local Menu Navigation:** At the Main Screen, press ENT and ESC at the same time to reset the NCU Controller.
    **Web Menu Navigation:** Go to Advance Settings Menu / SW Maintenance Tab / Reboot Controller button.

16. Enable the external alarms or notify appropriate personnel that this procedure is finished.
17. Ensure that there are no local or remote alarms active on the system.

**Figure 6.19 IB2 (Controller Interface Board) Connector Locations**

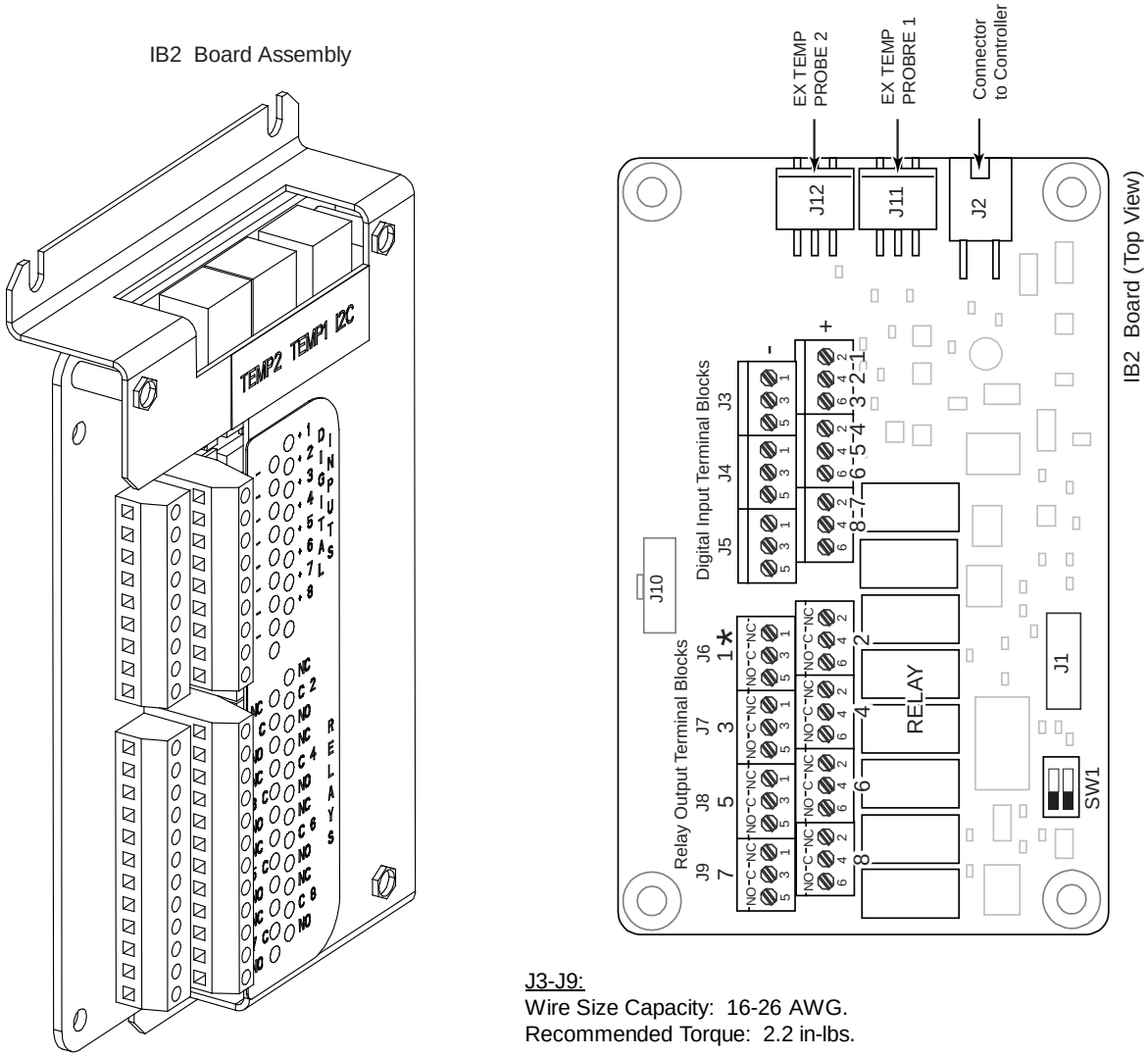


J3-J9:
Wire Size Capacity: 16-26 AWG.
Recommended Torque: 2.2 in-lbs.


Proprietary and Confidential © 2026 Vertiv Group Corp.

**Figure 6.20 EIB (Controller Extended Interface Board) Connector Locations**

Optional EIB Interface Board Assembly

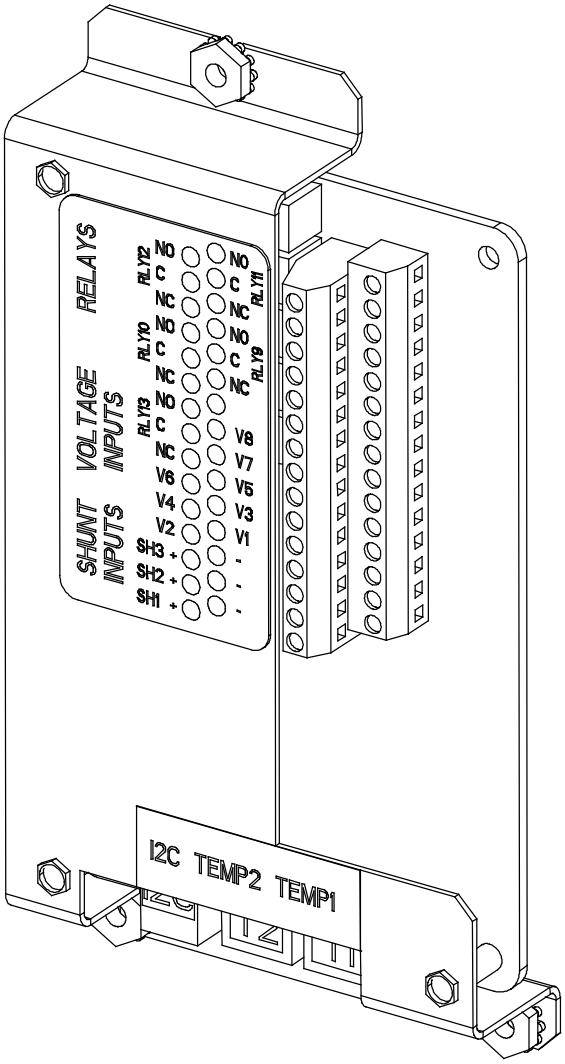


Optional EIB Interface Board
(Top View)

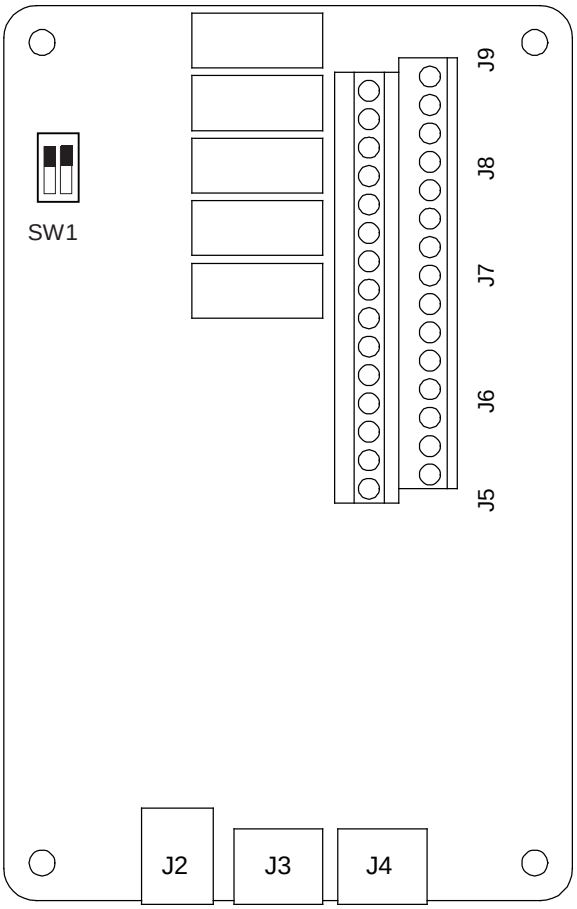


J5-J9
Wire Size Capacity: 16-26 AWG.
Recommended Torque: 2.2 in-lbs.

## SM-DU+ and Shunt Interface Assembly Replacement

### Procedure

1. Performing this procedure may activate external alarms. Do one of the following. If possible, disable these alarms. If these alarms cannot be easily disabled, notify the appropriate personnel to disregard any future alarms associated with this system while the procedure is being performed.

**DANGER!** Performing the next steps exposes service personnel to battery potential. Exercise extreme caution not to inadvertently contact or have any tool inadvertently contact any energized electrical termination.

2. Open the distribution cabinet's front door by turning the latch in the counterclockwise position.

**WARNING!** Damage to the circuit card may result if the next step is not followed.

3. Connect an approved grounding strap to your wrist. Attach the other end to a suitable ground.
4. Carefully label the wires connected to the shunt input terminal blocks on circuit card. These wires must be connected to the same terminals on the replacement circuit card. Refer to Figure 6.21.
5. Carefully label the connectors plugged into the circuit card. These connectors must be plugged into the same connectors on the replacement circuit card. Refer to Figure 6.21.

**DANGER!** In the next step, external alarm wiring may be energized from an external source. DO NOT allow bare wire ends to contact any grounded or energized object.

6. Remove the external wiring from the shunt input terminal blocks. DO NOT allow the bare wire end to contact any grounded or energized object. Isolate the wire end with electrical tape. Repeat for each wire to be removed.
7. Unplug all connectors plugged into the circuit card.
8. Remove the screw securing the SM-DU+ and Shunt Interface Assembly to the bottom of the distribution cabinet, and remove the assembly.
9. SM-DU+: In this step, ensure you do not intermix the old and replacement circuit cards. Set the switches on the replacement circuit card to the same settings as the old circuit card. Switch settings are documented in the "Setting Jumpers and Switch Options" section of the Power System Installation Instructions (IM581127000).
10. Slide the replacement SM-DU+ and Shunt Interface Assembly into the mounting position inside the distribution cabinet, and secure with the screw removed from the old assembly.
11. Plug all connectors removed from the old circuit card into the same position on the replacement circuit card.

**DANGER!** In the next step, external alarm wiring may be energized from an external source. DO NOT allow bare wire ends to contact any grounded or energized object.

12. Reconnect the external wiring to the correct terminals on the shunt input terminal blocks. First remove the electrical tape that was applied to the bare wire end in a previous step. DO NOT allow the bare wire end to contact any grounded or energized object. After securing the wire, gently tug on the wire to ensure that it cannot be pulled out of the terminal block. Repeat for each wire to be reconnected.
13. Remove the grounding wrist strap.
14. Close the distribution cabinet's front door. Turn the latch clockwise to secure the door.
15. Enable the external alarms, or notify appropriate personnel that this procedure is finished.


Proprietary and Confidential © 2026 Vertiv Group Corp.

16. Ensure that there are no local or remote alarms active on the system.

**Figure 6.21 SM-DU+ and Shunt Interface Assembly Connector Locations**

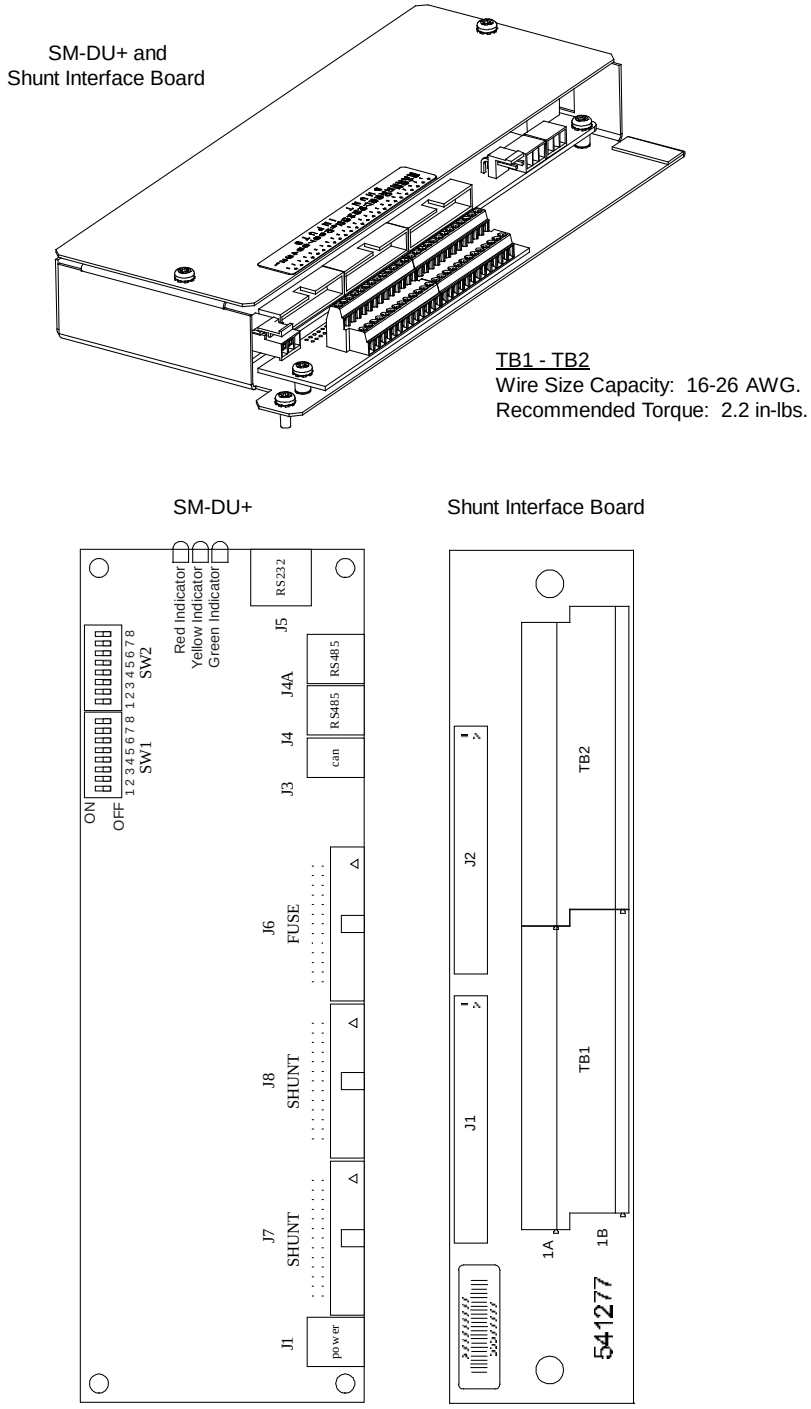

## IB5 (NCU Controller Second Ethernet Port Board) Replacement

**NOTE!** *IB5 boards with a 10M/100M/1G Ethernet port replaced IB4 boards with a 10M/100M Ethernet port. This transition enables the support of connected devices that communicate up to 1G. While both boards are physically interchangeable, the IB5 board does require the NCU to have V1.2.80 or higher software loaded.*

### Procedure

1. Performing this procedure may activate external alarms. Do one of the following. If possible, disable these alarms. If these alarms cannot be easily disabled, notify the appropriate personnel to disregard any future alarms associated with this system while the procedure is being performed.

**DANGER!** Performing the next steps exposes service personnel to battery potential. Exercise extreme caution not to inadvertently contact or have any tool inadvertently contact any energized electrical termination.

2. Open the distribution cabinet's front door by turning the latch in the counterclockwise position (system's in a relay rack) or open the system's enclosure door.

**WARNING!** Damage to the circuit card may result if the next step is not followed.

3. Connect an approved grounding strap to your wrist. Attach the other end to a suitable ground.
4. Loosen the captive fastener securing the latch mechanism to the front of the NCU. Pull the latch mechanism away from the NCU (this will retract the latch mechanism located on the bottom of the NCU). This unlocks the NCU from the shelf. Slide the NCU partially out from the shelf.
5. Carefully label the connectors plugged into the circuit card. These connectors must be plugged into the same connectors on the replacement circuit card. Refer to Figure 6.22.
6. Unplug all connectors plugged into the circuit card.
7. Remove the circuit card shield from the distribution cabinet by removing the screws securing it to the cabinet. Refer to Figure 6.22.
8. Remove the circuit card from the distribution cabinet by removing the screws securing it to the cabinet. Refer to Figure 6.22.
9. Orient the replacement circuit card over its mounting position, and secure with the screws removed from the old circuit card. Refer to Figure 6.22.
10. Orient the circuit card shield over its mounting position, and secure with the screws previously removed. Refer to Figure 6.22.
11. Plug all connectors removed from the old circuit card into the same position on the replacement circuit card.
12. Slide the NCU completely into its mounting position. Push the latch mechanism into the front panel of the NCU, and secure by tightening the captive fastener. This locks the NCU securely to the shelf.
13. Remove the grounding wrist strap.
14. Close the distribution cabinet's front door and turn the latch clockwise to secure the door (system's in a relay rack) or close the system's enclosure door.
15. To verify that the IB5 board is functioning, from the Main Menu on the local display, press the ESC button, then down arrow and verify the IP address 192.168.100.100 is displayed.
16. Enable the external alarms or notify appropriate personnel that this procedure is finished.
17. Ensure that there are no local or remote alarms active on the system.


Proprietary and Confidential © 2026 Vertiv Group Corp.

**Figure 6.22 IB5 (NCU Controller Second Ethernet Port Board) Replacement**

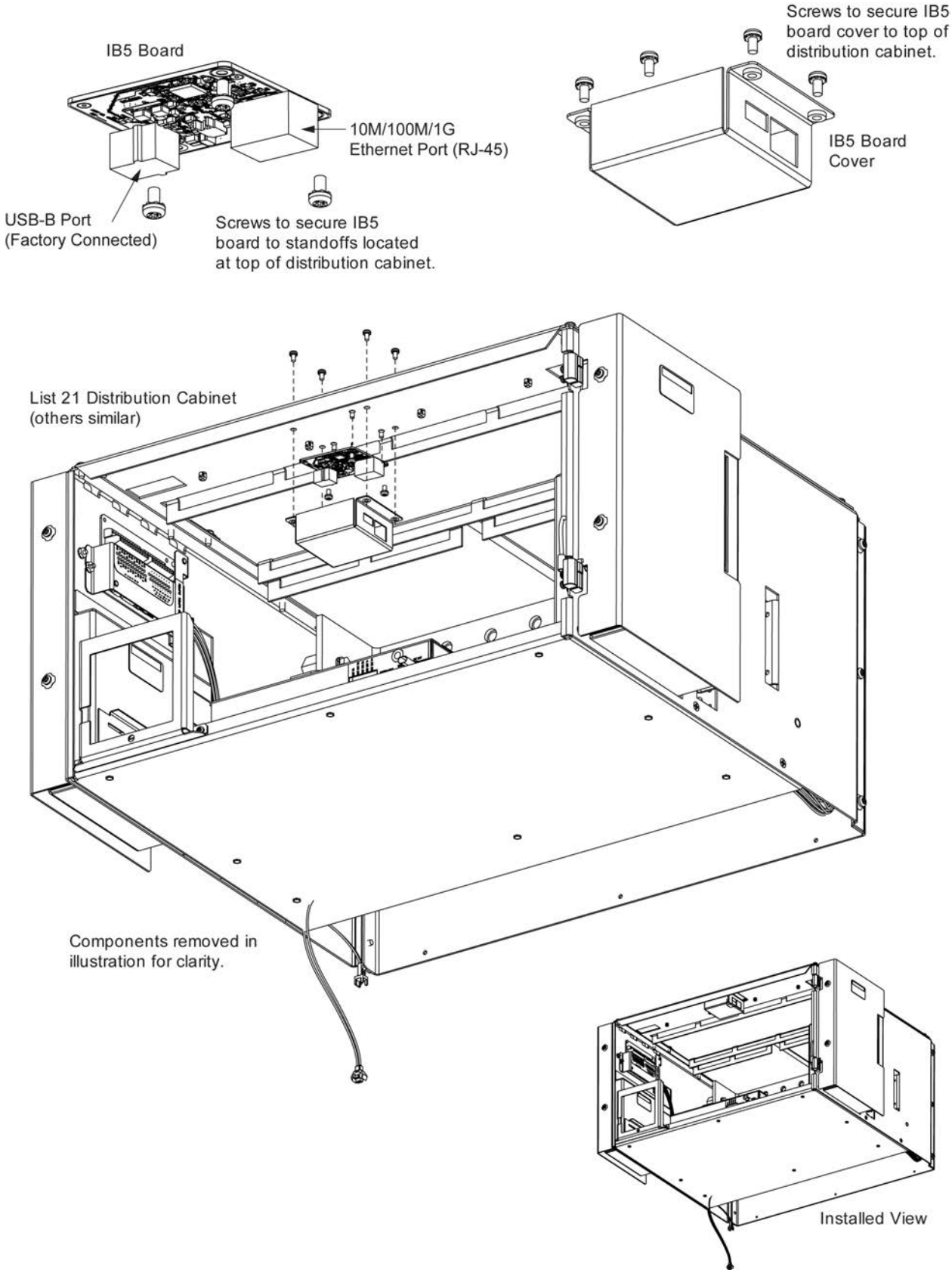

## Optional LVD Driver and LVD Driver Lite Circuit Card Replacement

### Procedure

1. Performing this procedure may activate external alarms. Do one of the following. If possible, disable these alarms. If these alarms cannot be easily disabled, notify the appropriate personnel to disregard any future alarms associated with this system while the procedure is being performed.

**DANGER!** Performing the next steps exposes service personnel to battery potential. Exercise extreme caution not to inadvertently contact or have any tool inadvertently contact any energized electrical termination.

2. Open the distribution cabinet's front door by turning the latch in the counterclockwise position.

**WARNING!** Damage to the circuit card may result if the next step is not followed.

3. Connect an approved grounding strap to your wrist. Attach the other end to a suitable ground.
4. If any of the low voltage disconnect contactors is open and it is desired to be closed, push the LVD Inhibit Switch located on the circuit card to the UP position momentarily and then leave the switch in the middle (OFF) position.
5. Remove the top and front panels to access the circuit cards at the bottom of the distribution cabinet.
6. Carefully label the connectors plugged into the circuit card. These connectors must be plugged into the same connectors on the replacement circuit card. Refer to Figure 6.23 or Figure 6.24.
7. Unplug all connectors plugged into the circuit card.
8. Remove the screws securing the circuit card and remove the circuit card from the distribution cabinet.
9. Slide the replacement circuit card into the mounting position inside the distribution cabinet, and secure with the screws removed from the old circuit card.
10. Ensure that the LVD Inhibit Switch is in the middle (OFF) position.
11. Plug all connectors removed from the old circuit card into the same position on the replacement circuit card.
12. Push the LVD Inhibit Switch to the down (ON) position.
13. Remove the grounding wrist strap.
14. Reinstall the top and front panels that cover the circuit cards at the bottom of the distribution cabinet.
15. Close the distribution cabinet's front door. Turn the latch clockwise to secure the door.
16. Enable the external alarms or notify appropriate personnel that this procedure is finished.
17. Ensure that there are no local or remote alarms active on the system.


Proprietary and Confidential © 2026 Vertiv Group Corp.

**Figure 6.23 Optional LVD Driver Circuit Card Connector Locations**

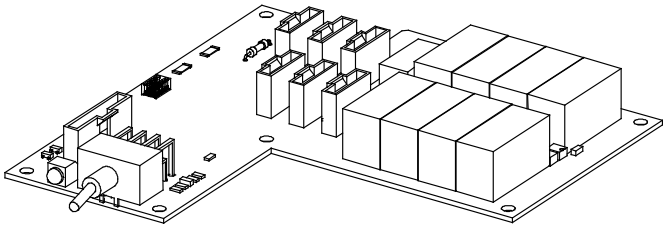

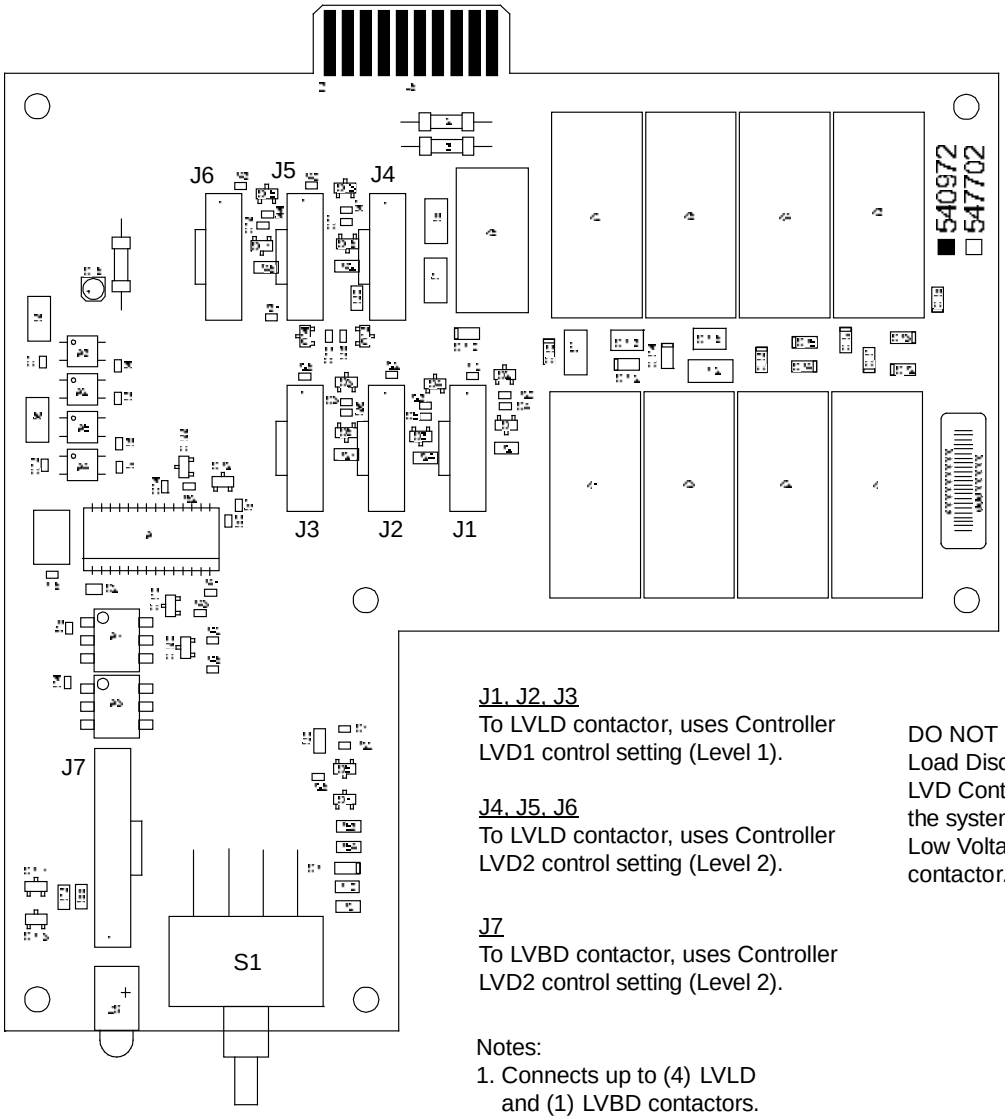


J1, J2, J3
To LVLD contactor, uses Controller LVD1 control setting (Level 1).

J4, J5, J6
To LVLD contactor, uses Controller LVD2 control setting (Level 2).

J7
To LVBD contactor, uses Controller LVD2 control setting (Level 2).

Notes:
1. Connects up to (4) LVLD and (1) LVBD contactors.

DO NOT change a Low Voltage Load Disconnect contactor to LVD Control Level 2 (LVD2) if the system is furnished with a Low Voltage Battery Disconnect contactor.

**Figure 6.24 Optional LVD Driver Lite Circuit Card Connector Locations**

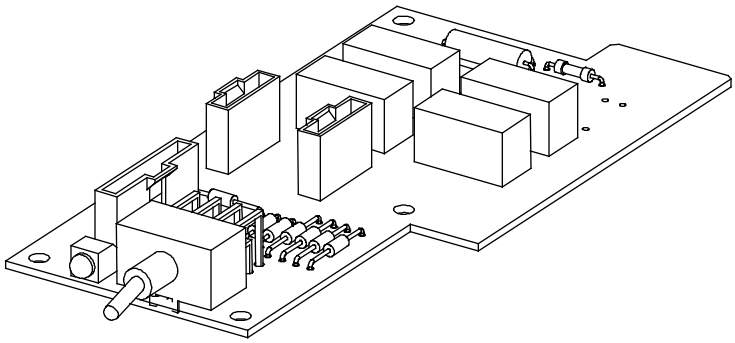

DO NOT change a Low Voltage Load Disconnect contactor to LVD Control Level 2 (LVD2) if the system is furnished with a Low Voltage Battery Disconnect contactor.

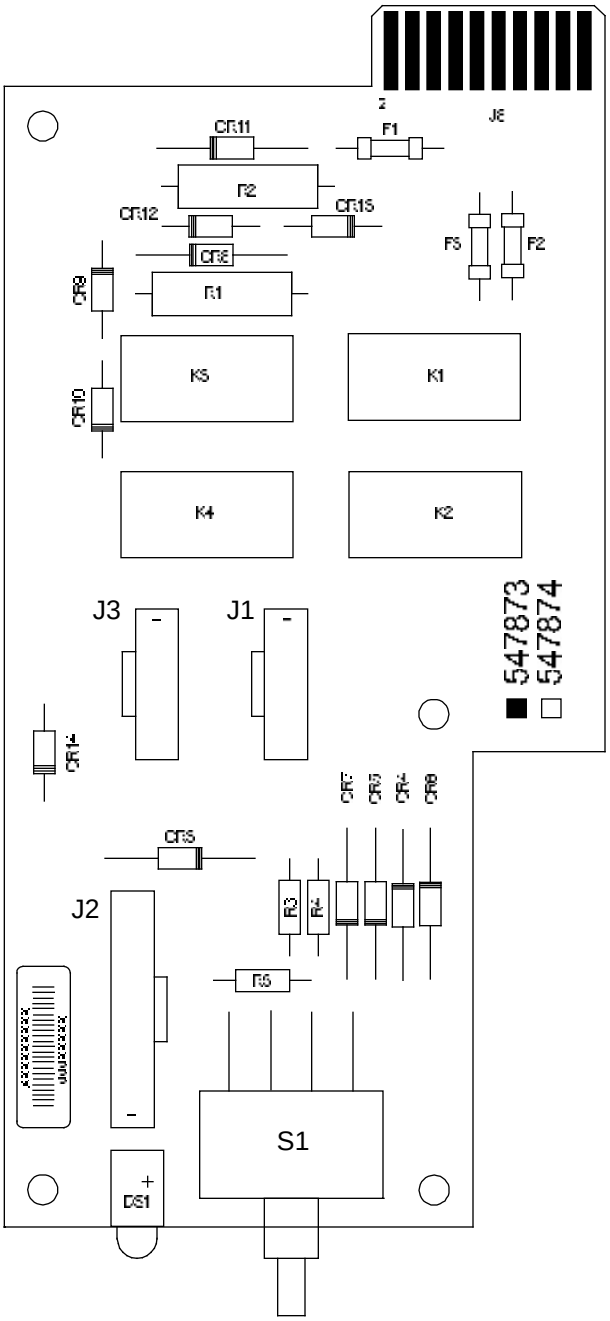


J1
To LVLD contactor, uses Controller LVD1 control setting (Level 1).

J3
To LVLD contactor, uses Controller LVD2 control setting (Level 2).

J2
To LVBD contactor, uses Controller LVD2 control setting (Level 2).
Can only be used if it is contained in a List 21 (1-row) cabinet.

Notes:
1. Connects up to (2) LVD contactors rated at 600 A or less.
2. Only one (1) contactor per level can be accommodated. J2 and J3 are on Level 2, only one (1) of these connectors can be used at a time.


Proprietary and Confidential © 2026 Vertiv Group Corp.

## Optional Manual Battery Disconnect Circuit Card Replacement

### Procedure

1. Performing this procedure may activate external alarms. Do one of the following. If possible, disable these alarms. If these alarms cannot be easily disabled, notify the appropriate personnel to disregard any future alarms associated with this system while the procedure is being performed.

**DANGER!** Performing the next steps exposes service personnel to battery potential. Exercise extreme caution not to inadvertently contact or have any tool inadvertently contact any energized electrical termination.

2. Open the distribution cabinet's front door by turning the latch in the counterclockwise position.

**WARNING!** Damage to the circuit card may result if the next step is not followed.

3. Connect an approved grounding strap to your wrist. Attach the other end to a suitable ground.
4. Remove the top and front panels to access the circuit cards at the bottom of the distribution cabinet.
5. Carefully label the connectors plugged into the circuit card. These connectors must be plugged into the same connectors on the replacement circuit card. Refer to Figure 6.25.
6. Unplug all connectors plugged into the circuit card.
7. Remove the screws securing the circuit card and remove the circuit card from the distribution cabinet.
8. Place the replacement circuit card into the mounting position inside the distribution cabinet, and secure with the screws removed from the old circuit card.
9. Plug all connectors removed from the old circuit card into the same position on the replacement circuit card.
10. Remove the grounding wrist strap.
11. Reinstall the top and front panels that cover the circuit cards at the bottom of the distribution cabinet.
12. Close the distribution cabinet's front door. Turn the latch clockwise to secure the door.
13. Enable the external alarms or notify appropriate personnel that this procedure is finished.
14. Ensure that there are no local or remote alarms active on the system.

Proprietary and Confidential © 2026 Vertiv Group Corp.

**Figure 6.25 Optional Manual Battery Disconnect Circuit Card Connector Locations**

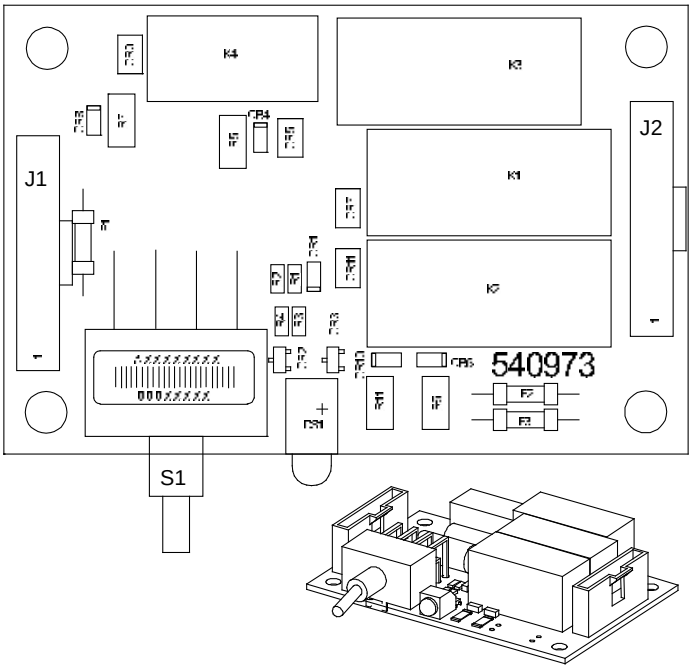



Proprietary and Confidential © 2026 Vertiv Group Corp.

## 6.6.12 Replacing a Battery or Load Disconnect Contactor

**DANGER!** All sources of AC and DC power must be completely disconnected from this power system before performing this procedure. Use a voltmeter to verify no DC voltage is present on the system busbars before proceeding.

***NOTE!*** *In the following procedure, before making busbar-to-busbar connections, apply a thin coating of electrical anti-oxidizing compound to the mating surfaces of the busbars.*

**Procedure**

***NOTE!*** *Refer to Figure 6.26, Figure 6.27, Figure 6.28, or Figure 6.29 as this procedure is performed.*

**Removing the Contactor**

1. Verify all AC and DC power sources are disconnected from the power system.
2. For the 1-row distribution cabinet, the contactor can be accessed from the top of the distribution cabinet. For the 2, 3, or 4-row distribution cabinet, the contactor can be accessed from the rear (and top) of the distribution cabinet.
3. For the 2, 3, or 4-row distribution cabinet, remove the distribution cabinet's rear access panel(s).
4. Disconnect the wiring to the contactor by unplugging the quick disconnects.
5. Note the orientation of the contactor to ensure the replacement is installed the same way. Unbolt the contactor (4-places) and remove. Save all hardware.

**Installing the Replacement Contactor**

6. Position the replacement contactor oriented the same way as the old.
7. Secure the contactor with the hardware removed above. Refer to Figure 6.26, Figure 6.27, Figure 6.28, or Figure 6.29 for hardware build-up and recommended torque.
8. Replace the wiring to the contactor by plugging-in the quick disconnects. Refer to Figure 6.26, Figure 6.27, Figure 6.28, or Figure 6.29.
9. For the 2, 3, or 4-row distribution cabinet, replace the distribution cabinet's rear access panel(s).

**Restarting the Power System**

10. Reconnect the AC and DC power sources to the power system.
11. Start the power system. Refer to the separate Installation Instructions (IM581127000) for a startup procedure.
12. Verify no alarms are active.

**Figure 6.26 Replacing a Battery Disconnect Contactor in a 1-Row Distribution Cabinet**

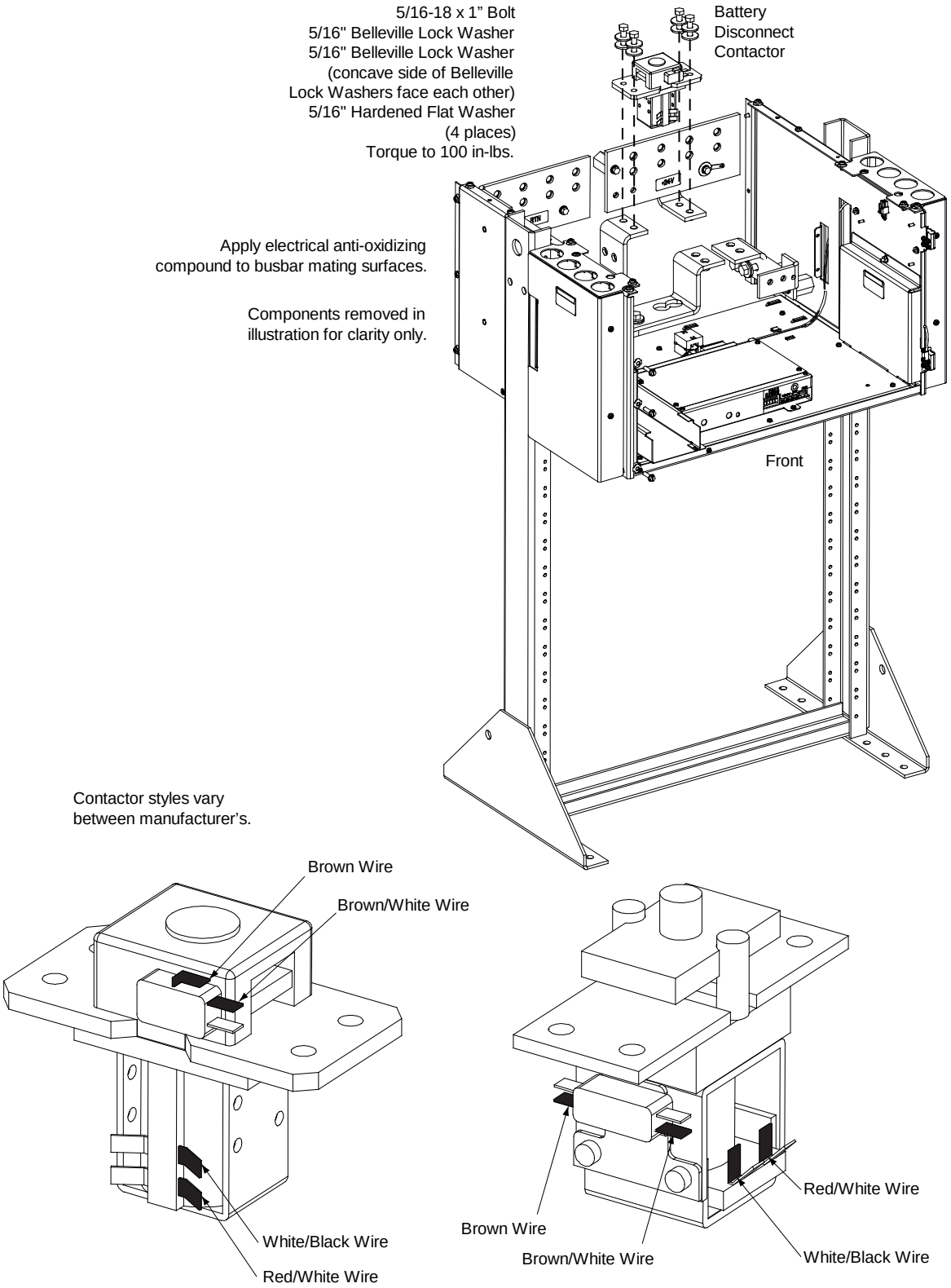



Proprietary and Confidential © 2026 Vertiv Group Corp.

**Figure 6.27 Replacing a Battery Disconnect Contactor in a 2, 3, or 4-Row Distribution Cabinet**

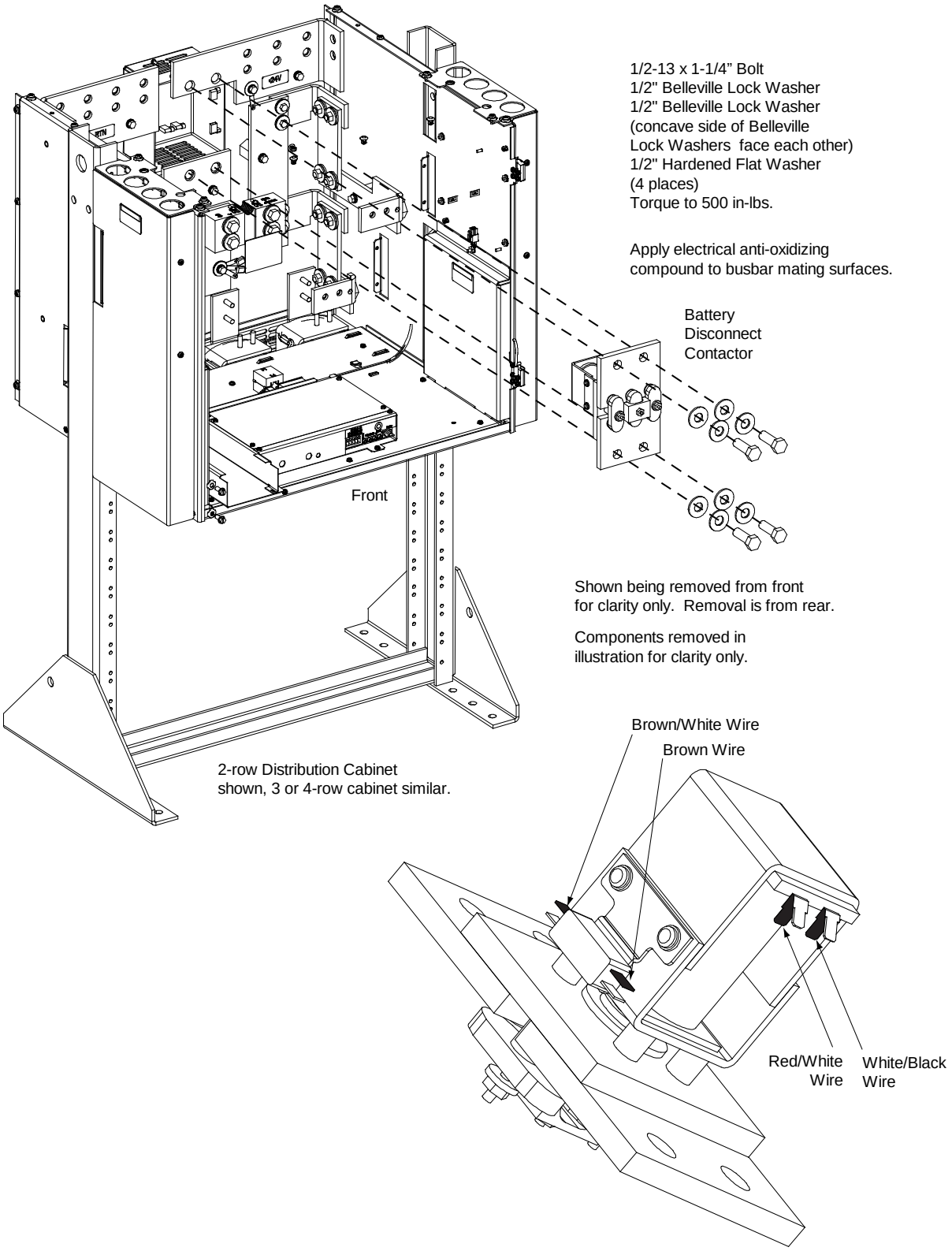

**Figure 6.28 Replacing a Load Disconnect Contactor in a 1-Row Distribution Cabinet**

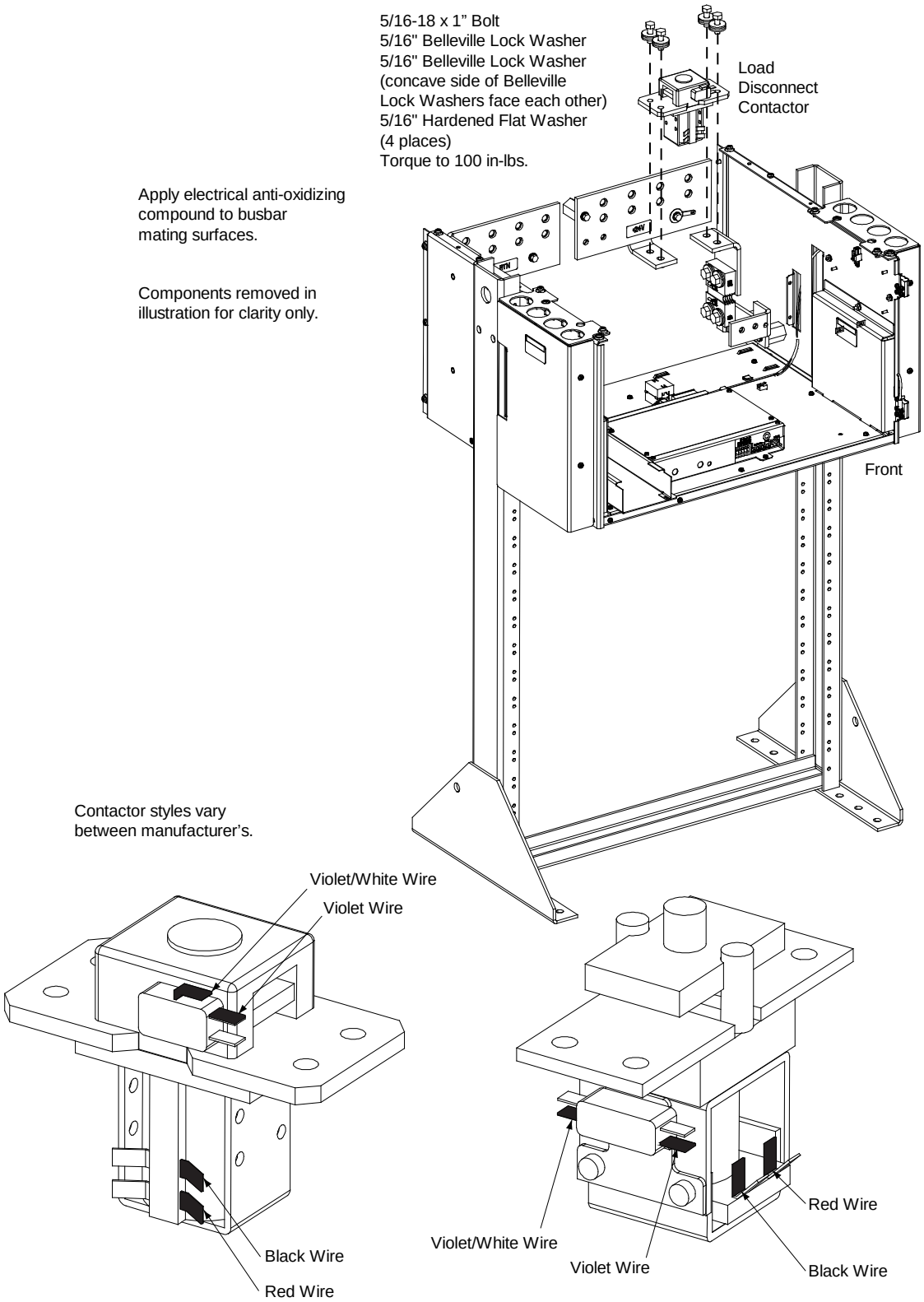



Proprietary and Confidential © 2026 Vertiv Group Corp.

**Figure 6.29 Replacing a Load Disconnect Contactor in a 2, 3, or 4-Row Distribution Cabinet**

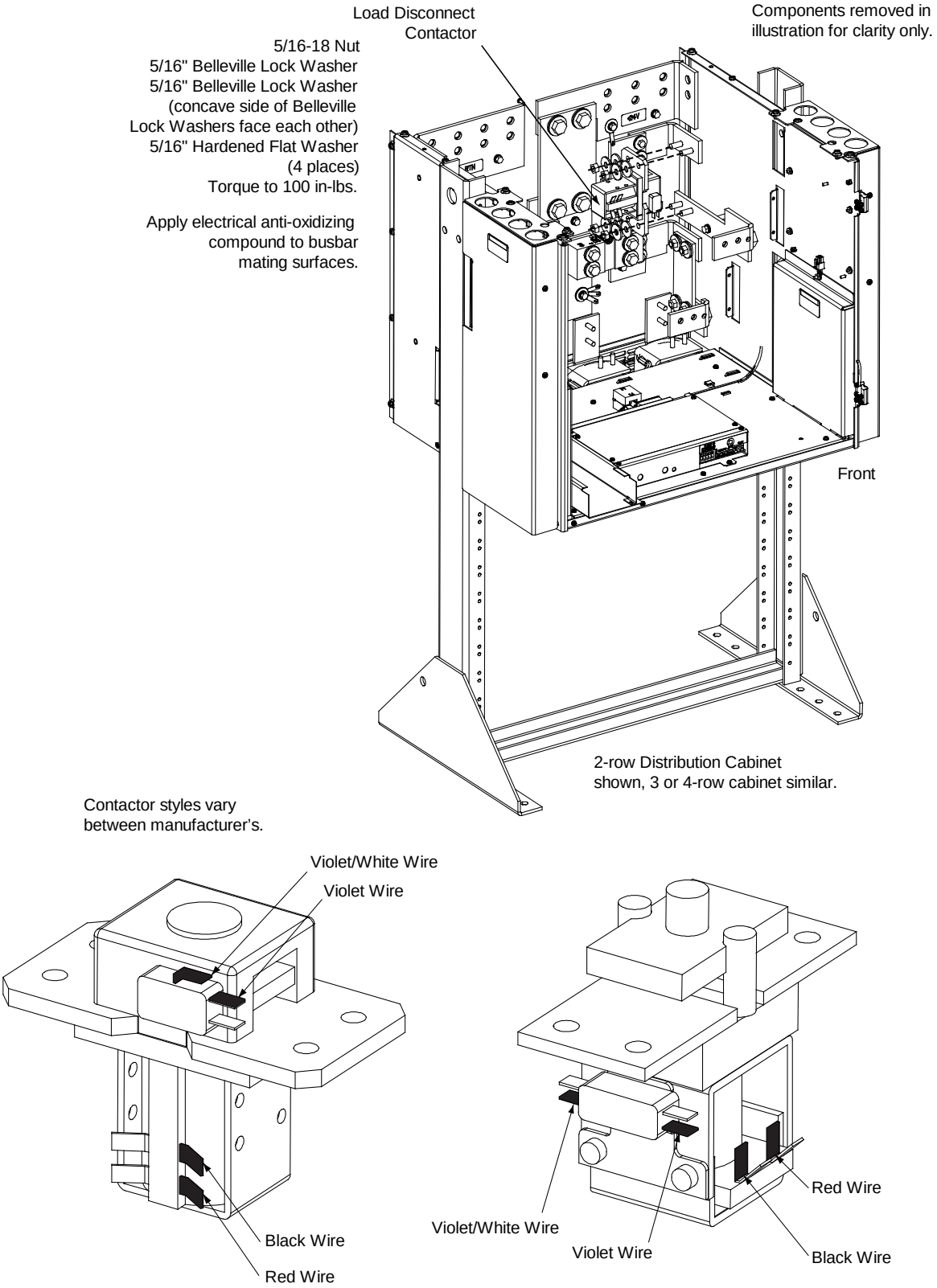

This page intentionally left blank.


Proprietary and Confidential © 2026 Vertiv Group Corp.

## Connect with Vertiv on Social Media

https://www.facebook.com/vertiv/

https://www.instagram.com/vertiv/

https://www.linkedin.com/company/vertiv/

https://www.x.com/vertiv/

Proprietary and Confidential © 2026 Vertiv Group Corp.

Vertiv.com | Vertiv Headquarters, 505 N Cleveland Ave, Westerville, OH 43082, USA

© 2026 Vertiv Group Corp. All rights reserved. Vertiv™ and the Vertiv logo are trademarks or registered trademarks of Vertiv Group Corp. All other names and logos referred to are trade names, trademarks or registered trademarks of their respective owners. While every precaution has been taken to ensure accuracy and completeness here, Vertiv Group Corp. assumes no responsibility, and disclaims all liability, for damages resulting from use of this information or for any errors or omissions.

UM581127000_REVY

Proprietary and Confidential © 2026 Vertiv Group Corp.